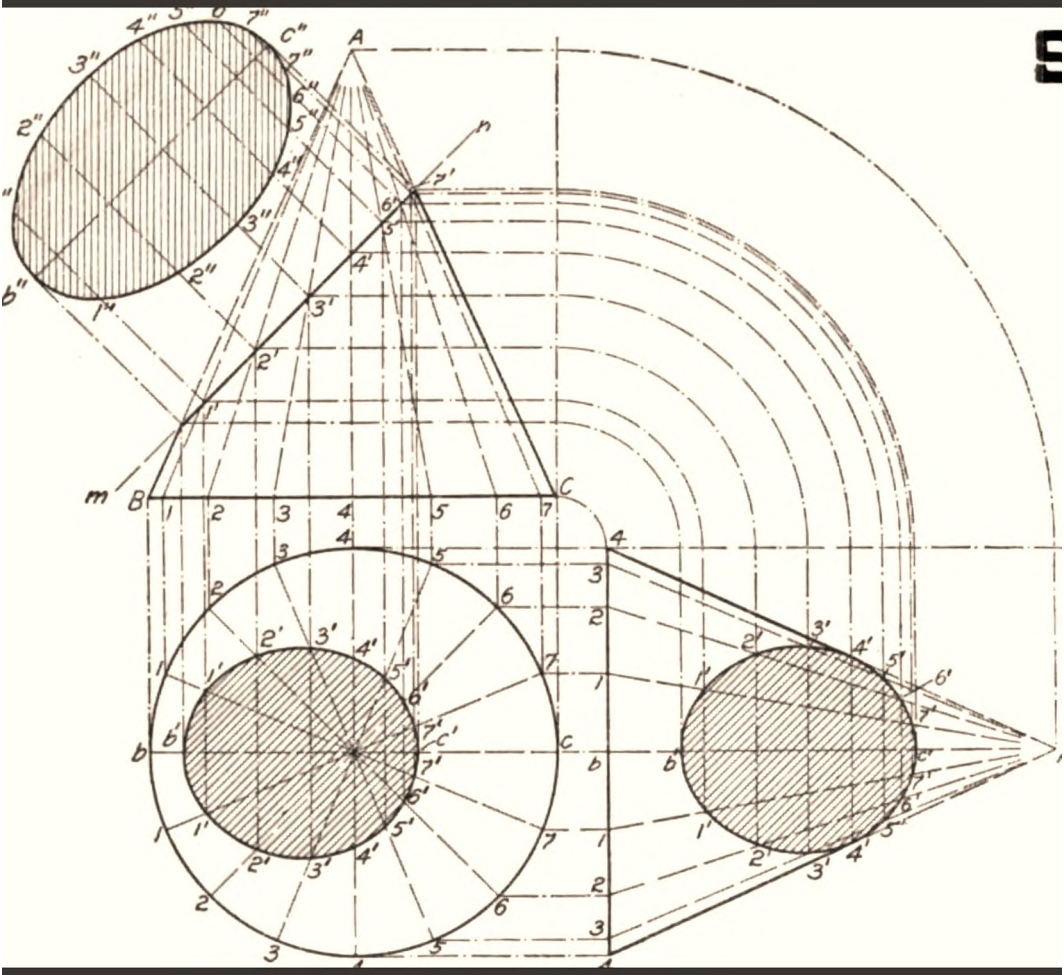

# *A Textbook on Sheet-metal Pattern Drafting*

International Correspondence Schools

Digitized by Google

REESE LIBRARY
OF THE
UNIVERSITY OF CALIFORNIA.
Class No. 575f
J61s
v.2

This textbook is intended for reference use in public Libraries, the Libraries of Educational Institutions and Industrial Establishments.

Individuals can only obtain the I. C. S. Textbooks in connection with the Courses of Instruction of the International Correspondence Schools, Scranton, Pa.

59 S—1050-5-27-02-5m

Digitized by Google

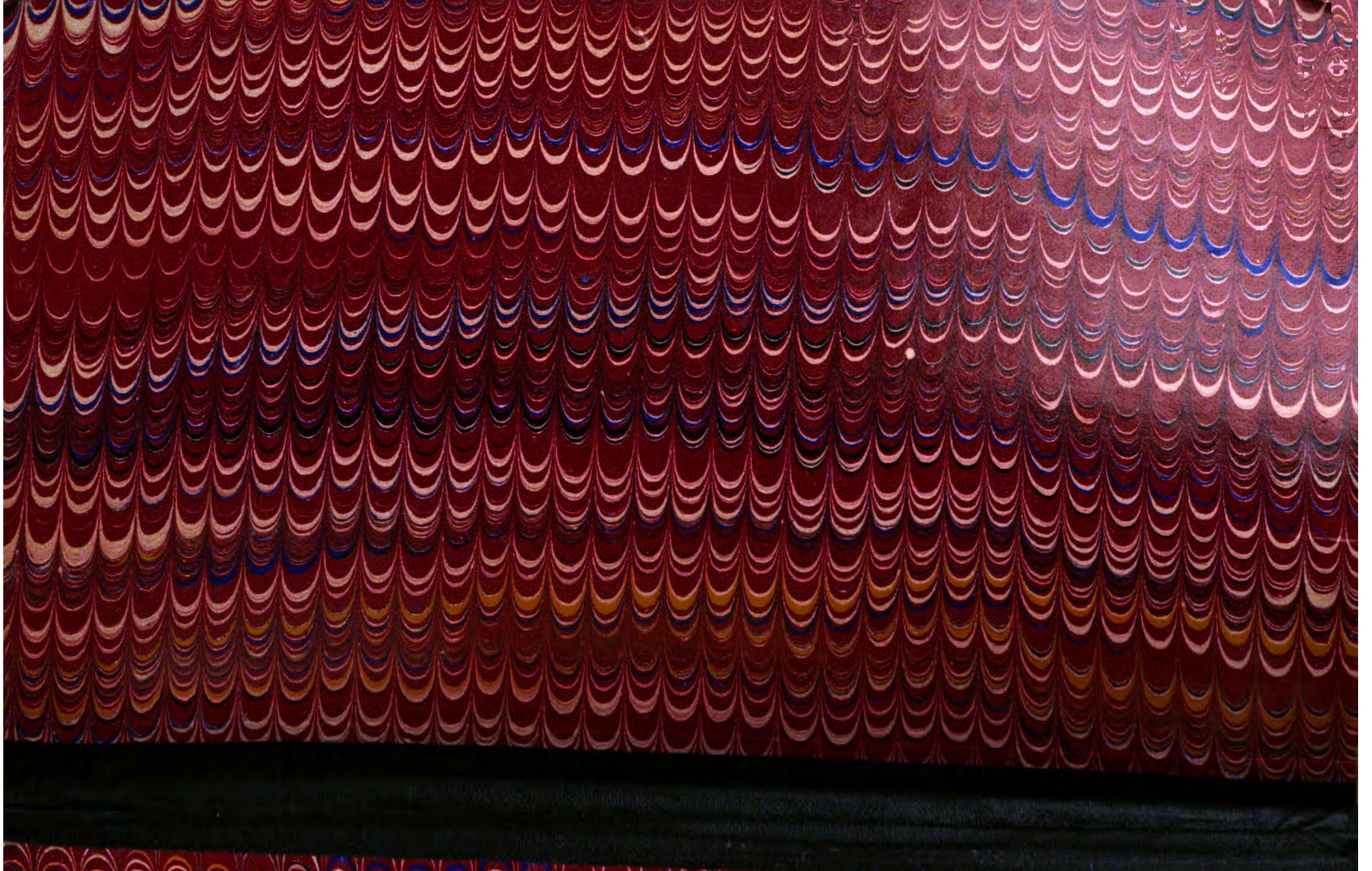

Digitized by Google

Digitized by Google

Digitized by Google

# A TEXTBOOK

ON

# SHEET-METAL PATTERN DRAFTING

INTERNATIONAL CORRESPONDENCE SCHOOLS
SCRANTON, PA.

PRACTICAL PROJECTION
DEVELOPMENT OF SURFACES
PRACTICAL PATTERN PROBLEMS
ARCHITECTURAL PROPORTION
DEVELOPMENT OF MOLDINGS
SKYLIGHTS

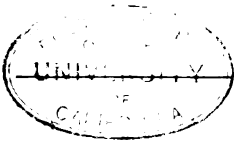

SCRANTON
INTERNATIONAL TEXTBOOK COMPANY
A-2

Digitized by Google

T2250
I6
v.2

Copyright, 1901, by THE COLLIERY ENGINEER COMPANY,
under the title of A Treatise on Sheet-Metal Pattern Drafting.

Entered at Stationers' Hall, London.

Practical Projection: Copyright, 1899, by THE COLLIERY ENGINEER COMPANY.

Development of Surfaces: Copyright, 1899, by THE COLLIERY ENGINEER COMPANY

Practical Pattern Problems, Part 1: Copyright, 1900, by THE COLLIERY ENGINEER COMPANY.

Practical Pattern Problems, Part 2: Copyright, 1900, by THE COLLIERY ENGINEER COMPANY. Entered at Stationers' Hall, London.

Practical Pattern Problems, Part 3: Copyright, 1901, by THE COLLIERY ENGINEER COMPANY. Entered at Stationers' Hall, London.

Architectural Proportion: Copyright, 1901, by THE COLLIERY ENGINEER COMPANY. Entered at Stationers' Hall, London.

Development of Moldings: Copyright, 1901, by THE COLLIERY ENGINEER COMPANY. Entered at Stationers' Hall, London.

Skylights: Copyright, 1901, by THE COLLIERY ENGINEER COMPANY. Entered at Stationers' Hall, London.

All rights reserved.

CII
BURR PRINTING HOUSE,
FRANKFORT AND JACOB STREETS,
NEW YORK.

Digitized by Google

# CONTENTS.


| | *Section.* | *Page.* |
|---|---|---|
| PRACTICAL PROJECTION. | | |
| Orthographic Projection | 15 | 1 |
| General Principles | 15 | 3 |
| Plates | 15 | 12 |
| Drawing Plate, Projections I | 15 | 13 |
| Drawing Plate, Projections II | 15 | 46 |
| Drawing Plate, Projections III | 15 | 61 |
| Drawing Plate, Sections I | 15 | 68 |
| Drawing Plate, Sections II | 15 | 79 |
| Drawing Plate, Intersections I | 15 | 84 |
| Drawing Plate, Intersections II | 15 | 90 |
| DEVELOPMENT OF SURFACES. | | |
| Definitions | 16 | 1 |
| General Classification of Solids | 16 | 3 |
| Solids Accurately Developed | 16 | 5 |
| Development by Parallel Lines | 16 | 13 |
| Rules for Parallel Developments | 16 | 24 |
| Drawing Plate, Developments I | 16 | 25 |
| Drawing Plate, Developments II | 16 | 31 |
| Drawing Plate, Developments III | 16 | 33 |
| Development by Radial Lines | 16 | 36 |
| Rules for Radial Developments | 16 | 42 |
| Drawing Plate, Developments IV | 16 | 44 |
| Triangulation | 16 | 49 |
| Drawing Plate, Developments V | 16 | 53 |
| Approximate Developments | 16 | 63 |




96761

Digitized by Google

| PRACTICAL PATTERN PROBLEMS. | *Section.* | *Page.* |
|---|---|---|
| General Conditions | 17 | 1 |
| Tables | 17 | 15 |
| Gauges for Sheet Metal | 17 | 15 |
| Comparison of Gauges | 17 | 19 |
| Galvanized Iron | 17 | 19 |
| Sheet Copper | 17 | 22 |
| Sheet Zinc | 17 | 22 |
| Russia Sheet Iron | 17 | 23 |
| Tin Plates | 17 | 26 |
| Sheet Lead and Sheet Tin | 17 | 29 |
| Skylight Glass | 17 | 33 |
| Specific Gravity | 17 | 34 |
| Patterns for Tin and Sheet-Iron Ware | 17 | 38 |
| Drawing Plate, Examination Plate I | 17 | 113 |
| Patterns for Pipework | 18 | 2 |
| Drawing Plate, Examination Plate II | 18 | 79 |
| Patterns for Articles in Heavy Sheet Metal | 19 | 3 |
| Drawing Plate, Examination Plate III | 19 | 87 |
| ARCHITECTURAL PROPORTION. | | |
| Introduction | 20 | 1 |
| The Five Orders of Architecture | 20 | 22 |
| Tuscan Order | 20 | 25 |
| Doric Order | 20 | 29 |
| Ionic Order | 20 | 37 |
| Corinthian Order | 20 | 45 |
| Composite Order | 20 | 53 |
| Architectural Forms | 20 | 55 |
| Columns | 20 | 55 |
| Classic Moldings | 20 | 60 |
| Pediments | 20 | 65 |
| Arches | 20 | 71 |
| Window Tracery | 20 | 77 |
| Name and Date Panels | 20 | 81 |
| Drawing Plate, Design for Sheet-Metal Bay Window | 20 | 88 |


Digitized by Google

| | Section. | Page. |
|---|---|---|
| **Development of Moldings.** | | |
| General Principles | 21 | 1 |
| Problems | 21 | 16 |
| Involved Miters | 21 | 76 |
| Drawing Plate, Examination Plate IV | 21 | 79 |
| **Skylights.** | | |
| Introduction | 22 | 1 |
| Construction of Skylights | 22 | 3 |
| Problems | 22 | 9 |
| Drawing Plate, Examination Plate V | 22 | 25 |


Digitized by Google

Digitized by Google

# PRACTICAL PROJECTION.

## INTRODUCTION.

**1. Orthographic Projection.**—When the sheet-metal worker is required to make any article whose form or dimensions are not previously known, it is evident that a description of the work in question should be furnished him. This description may be, and often is, given by verbal instruction; but in order to enable the worker to understand definitely what is wanted, the form of the object, its dimensions, and the quality of the material to be used should be stated. Instruction given in this way is, however, seldom satisfactory either to the workman or to his employer, since it is difficult in such cases to place the responsibility for any errors that may occur.

Written instruction, therefore, would seem to be preferable; but, since most objects would require an extended description, a shorter and more convenient method of conveying the desired information is to be sought. A **drawing** of the object is therefore made.

These drawings are generally made by a process termed *orthographic projection*, or, as it is usually called, **projection drawing.** Every detail of the object is correctly represented in this drawing, so that the workman knowing how to "read the drawing," may obtain his measurements therefrom for the construction of the object itself. He is also enabled, by an examination of the drawing, to understand exactly how the object will appear when completed. Hence, we have the following definition:



For notice of the copyright, see page immediately following the title page.

Digitized by Google

**Orthographic projection** *is the process of making correct representations of objects by means of drawings.*

**2. A Working Drawing Generally Necessary.**—Before a pattern for any piece of sheet-metal work can be laid out, a working drawing of the article must first be made. No pattern, however simple or plain, can be produced until we have something definite to work from.

The metal worker does not go to the trouble of preparing a drawing on paper for every piece of work he is called on to make, since many objects are so plain that a brief verbal or written description of their dimensions gives the mechanic all the information he needs to enable him to lay out the pattern.

If, for example, you are called on to make a box out of IX tin, 4 inches long, 3 inches wide, and 1 inch deep, you immediately proceed with the steel square to lay off the given sizes directly on the metal; but, if the mechanic is required to make a round pan having flaring sides or some article of a form not readily carried in the mind, there is one thing he must do before he can proceed with the work, or even lay out the pattern—he must make a **working drawing** of the object.

**3. What Constitutes a Working Drawing.** — There are several ways in which this drawing may be made, depending altogether on how complicated the object is. In the case of the pan referred to, it may be desirable, by an application of certain principles stated in this Course, to omit the operation of making a drawing consisting of several views, and proceed as with the box to "lay it out" directly on the metal. In this case, however, it will be found that the operation differs from that of making the box referred to, since it is first necessary to mark out the sizes and outlines as they will appear when the pan is completed. These sizes may or may not form a part of the pattern, but they are required as preliminary lines from which to "lay off," or "strike out," the pattern.

Marking out these sizes or dimensions of an object is

Digitized by Google

really making a working drawing. This drawing may be *full size*—in which case it is referred to as a **detail drawing**—or it may be drawn to a scale, either larger or smaller than the object itself.

**4. Where the Drawing Is Made.**—In the case of plain articles, the necessary drawings may be made directly on the metal; in the majority of cases, however, the work is of a more or less complex nature, making it highly important that a full-sized properly made detail drawing be used. This is not always provided, and the mechanic frequently has to make his own detail from a small freehand sketch or possibly from a drawing made to a small scale. In the latter case, an enlarged drawing must generally be made before the work of laying out the pattern can proceed. This necessitates operations with drafting board and drawing implements—with which the student is already familiar. The proficiency that has been acquired may now be put into practical use in the operations to follow.

It is the purpose of this section of the Course to present methods by which working drawings may be *made* and *read*. These methods are presented in a practical way, that the principles laid down may be readily understood by the student.

## GENERAL PRINCIPLES.

**5. Various Kinds of Drawings.**—The most common representations of objects are those used for purposes of illustration merely and known as **perspective drawings.** They are of little value to the mechanic to serve as working drawings, since they are not drawn to a scale in the same way as a projection drawing, and to obtain measurements therefrom is an operation both complicated and indirect. A *photograph* is an ideal perspective picture, but no one would think of using a photograph as a working drawing. The photograph and the perspective drawing represent the object "as we see it," or as it appears to the eye of the observer, while the working drawing- the projection drawing

Digitized by Google

—represents the object *as it actually is*, or will be when made. A photograph, however, shows only such objects as really exist, while a projection drawing often shows objects that exist only in the imagination of the draftsman or a person capable of understanding, or "reading," the drawing. By means of such drawings the imagination is aided in picturing the object as already constructed—or, as we would say, it enables the mechanic to see the object "in his mind's eye."

**6. What Is Shown in a Drawing.**—The perspective drawing always shows more than one side of an object—generally three sides—while the working drawing seldom shows more than one side, that being the side toward the observer. The position of such other portions of the object as are not located on the side shown in the drawing may, however, be indicated in a projection drawing by dotted lines. No lines should be used in a working drawing that do not represent actual edges, or outlines, in the object itself. We sometimes find certain edges or outlines of an object represented in a drawing by heavy lines. These heavy lines are called **shade lines**; but since they are not essential features of the working drawing, no description of them is necessary in this Course. There is also an elaborate system of representing the effect of light and shade on curved and receding surfaces by means of lines properly disposed over the surfaces shown in the drawing. Since these lines are for effect only, and their meaning is apparent to the observer, the principles governing their use are not made a part of the subject matter of this Course.

**7. Position of Observer.**—Another point of difference between the perspective and the projection drawing is that, in taking the view of which the perspective drawing is a representation, the eye of the observer remains in a fixed position, and in the same relation to the drawing as the camera is to the photograph; while in that view of the object of which the projection drawing is a representation, the eye of the observer is always supposed to be directly

Digitized by Google

over, or opposite, that point in the drawing which is being noted.

This may be illustrated by the student for himself in a very simple way. Place a sheet of paper on the drawing board and draw a horizontal line, say 6 inches long; now lay an ordinary 2-foot pocket rule against this line, in the manner shown in Fig. 1, and proceed to mark off the line to correspond with the divisions on the rule. He will find that he is obliged to get his eye directly over each mark on the rule, and to "sight" carefully down on to the rule before making each mark, very much as he would "sight" or look along a piece of work to see whether it is straight or not. It will be noticed also that he is making *one* eye do all the work in this "sighting," and, further, it will be observed that in making the markings he is moving his head as he progresses toward the end of the line. He is obliged to do this to keep his eye exactly over each point on the line as it is marked.

FIG. 1.

**8. Line of Sight.**—The line first drawn on the paper is not the only one made use of in reproducing the markings on the rule. The student has unconsciously made use of

Digitized by Google

another line, or, more properly, a set of lines, that are an important feature of projection drawing. These lines are those made use of in doing the "sighting" necessary for the marks; they are purely imaginary lines and are not represented in the illustration. They are very properly called **lines of sight.** The lines of sight in a projection drawing are *always perpendicular to the drawing.* They extend from a point in the eye of the observer to a point on the drawing that is directly opposite, as indicated by the point of the draftsman's pencil in Fig. 1.

These lines of sight—which, as stated, are only imaginary lines and are not represented in a working drawing—constitute one of the most important features of the projection drawing; for on these lines we are enabled to obtain the views from the object, and, by means of other lines, called **projectors,** bearing a certain relation to the lines of sight (as will be explained later), we can reproduce the views thus obtained on the drawing.

**9. Lines of Sight Always Parallel.**—When it is desired to make a drawing of any object, the lines of sight must be used in the same manner as in marking the divisions on the line in Fig. 1; that is, care must be taken to keep the lines of sight in any one view parallel to one another. We may take different views of the same object, or, to express it otherwise, we may take positions on different sides of the object, in order to obtain views therefrom; but in any view thus taken, the above statement must be carefully observed and the lines of sight kept exactly parallel to one another.

**10. Several Views Necessary.**—We have already noted that a projection drawing seldom shows but one side of an object. Since there are no objects that present all their dimensions on any one side, it necessarily follows that, in order to convey a correct idea of the form of an object, it is necessary to make a drawing—or a *projection*—of as many sides as will enable the correct shape and dimensions to be shown. We may make these drawings

Digitized by Google

from as many points of view as may be desired; but, for certain reasons, to which attention will be called later, it is generally preferable to view all objects from six sides, which correspond to the six sides of a cube. These drawings of the different views have their correct names, which we will now consider.

**11. Plans and Elevations.**—It being assumed that the object is in some fixed position, the various views take their names from the different positions of the observer in his view of the object. Thus, a view taken from above, or looking down on the object, is called a **plan**; so also is a view from beneath, or looking up at the object; thus we have the terms *top plan* and *bottom plan*. The two views thus obtained are frequently designated by terms that vary with the class of objects represented, and not infrequently derive their names from some portion of the object itself. Thus, a top plan of a house is a view of the roof taken from above, and is called a *roof plan;* while a *ceiling plan* is, as its name indicates, a view of another part of the house taken from the opposite direction. In the case of small objects generally, such views are termed *top plan* or *bottom plan*, as the case may be. These views, in certain cases, should be marked on the drawing, in order to guard against error. Here it should be noted that while the position of the object is not changed in making either the top or the bottom plan, yet the position of the observer is. When the two plans thus made are compared, it is found that the corresponding points of the drawings are changed in their relation to each other in the same manner as the hands of two persons that are standing exactly in front of and facing each other—the right hand of the one being opposite to the left hand of the other.

A view taken from the side of an object is called an **elevation.** That side of an object shown in any elevation gives its name to that drawing; thus, a view of the front of an object is called a *front elevation.* So, also, we have the terms *rear elevation* and *side elevation.* In some cases

Digitized by Google

it may be more convenient to designate the elevations by the points of the compass; for example, the *north elevation* of a building is a projection of that part of the building which faces north, or, to state it as we have done before, that part of the building seen when looked at from the north.

**12. Section Drawings.**—Cases frequently occur in which the views or dimensions desired to be given on a working drawing cannot be shown in either plans or elevations. Under such circumstances, recourse is often had to a class of drawings termed **sections.** A section drawing is a projection of an object assumed to have been cut in two in a certain direction, usually at right angles to the lines of sight. Those parts of the object between the observer and the place where the cut is made are assumed to have been removed, so as to present an entirely new surface. This surface is not seen in the object itself, since the cutting is entirely imaginary—done simply for the purpose of showing some interior construction.

**13. Sections May be Drawn in Any Desired Position.**—The cut just referred to may be made in a *horizontal*, a *vertical*, or an *oblique* direction, according to the way in which it is desired to show the section. Portions of surfaces that have been cut in this way are usually represented by certain conventional methods, indicating the character or composition of the material. A custom frequently adopted, and which will be followed in the drawings for this Course, consists in designating surfaces exposed by the cut by a series of closely drawn parallel lines. Such lines are usually drawn at an oblique angle, as compared with the other portions of the drawing, and are called *cross-section* lines, or *cross-hatching*.

**14. A Set of Plans.**—It is a common practice, when speaking of a set of drawings consisting of various plans, elevations, sections, etc.—as for a house, or for some other object—to refer to them as a "set of plans." This is a collective phrase for the drawings, and its use in this way

Digitized by Google

is perfectly proper; when used in this sense, however, it is not understood as applying simply to a plan view as explained in Art. **11.** Drawings for large objects are frequently of a size such that the different views are more conveniently made on separate sheets. Architectural drawings are usually separated in this way, and it is often necessary for the one that is to read such drawings to arrange the sheets in a particular manner, in order that the relation between the views may be understood. This arrangement of the views will be considered later.

**15. Foreshortened Views.**—The lines in a projection drawing—or, as we shall term it hereafter, a *projection*—are either of the same length as the corresponding edges or outlines of the object itself, or they are *foreshortened.* No lines are represented longer than they actually exist on the object, except in cases where the drawing is made to an enlarged scale. All lines that are used to represent the edges or outlines of an object, and that are at right angles to the lines of sight in any view, are represented in that view by their true length. Lines that represent other edges or outlines, and are not at right angles to the lines of sight, are consequently represented shorter than they exist on the object, and are then said to be **foreshortened.**

**16. Geometrical Forms.**—The simplest geometrical form that we can imagine is a *point;* next we have a *line,* defined as the shortest distance between two points; then a *surface,* which is a flat, or plane, figure bounded by lines; and, finally, a *solid,* which in turn is bounded by different surfaces.

**17. The Combination of Geometrical Forms.**—Since the mechanic deals with objects of various forms that may be said to represent geometrical solids, we shall endeavor to convey an idea of the way in which the representation of these objects may be simplified by resolving them into their elements, or the parts that combine to produce these forms. We thus have to deal with points, lines, surfaces, and solids; of these four things, one only—the

Digitized by Google

solid—can be represented by any actual thing or be such as to enable us to handle it, for there is no object that does not possess *length*, *breadth*, and *thickness* to a greater or less extent. It consequently follows that the other three forms are entirely imaginary. The student that can most readily conceive or imagine their existence in this way will most readily comprehend the principles involved in projection drawing and pattern drafting.

**18. A Test of the Student's Imagination.**—The following illustration will show how a solid may be resolved into the simplest of its elements and still retain its definite and characteristic form. We will suppose a sheet-metal box to be made in the form of a cube, each edge being 1 inch long. The six square pieces of sheet metal that make the sides of this box are to be lightly soldered together, "edge and edge." This box represents a geometrical solid, although it is by no means a solid considered in a physical, or practical, sense. It is, in fact, popularly spoken of as being "hollow"; but we could very readily convert it into a solid by filling it with molten solder. It represents, however, as it is, a geometrical solid, and as such we will consider the parts of which it is made up, without paying any attention, in this elementary part of the subject, to the material of which it is composed. We are now dealing with *forms* only, and until these principles are fixed in the student's mind no attention will be paid to other details.

**19.** We first look for the surfaces of this solid, of which we find six. The student may have some difficulty in understanding that the surfaces of this cube, which he can apparently distinguish by the sense of touch, exist only in an imaginary way. We refer him, therefore, to our definitions for the explanation of this seeming paradox. A surface, we have been told, has length and breadth, while a solid has these and also a third property—thickness. Now, as we have said before, we cannot consider the material of which the cube is composed, but if we handle it we will be obliged to refer to the metal of which the sides of the cube are

Digitized by Google

made. These metal sides have thickness; it may be only a few thousandths of an inch, but still it *is* thickness, and consequently does not come within our definition of a surface. A surface may be compared to a shadow, which can be distinguished by its outlines or shape, but, as every one knows, is absolutely without thickness. It is in this sense that we refer to the sides of the cube as its *surfaces*. We find also that each of these six surfaces is bounded, or defined, by four edges or outlines, the lines in turn being terminated at the corners of the cube by points, of which there are eight. It will now be seen that these eight points, situated at the extremities of the lines, or edges, of the cube, perfectly define the shape and size of the geometrical solid.

If we could imagine the metal sides of the cube to disappear entirely, leaving only the points at the corners, we would still have as perfect a representation of the size and shape of the cube in our minds as if it had an actual existence and could be seen by the eye. For these imaginary points could then very easily be imagined as being connected by lines, and we could then "see" the surfaces, and finally the solid, existing in the same imaginary way. It will thus be comparatively easy for us to transfer a representation of this solid to our drawing, since we can use the points as the markings on the rule were used in connection with the lines of sight in a previous illustration.

**20. The Imagination a Valuable Assistant to the Draftsman.**—An object, or solid, of any conceivable shape may thus be resolved into its elementary parts or points. The drawing of the object, then, will consist simply of locating the positions of these points on the drawing. We may have drawings to make that will require the location of a hundred or more of these points, depending entirely on the form or shape of the object we are dealing with, but the principles are in all cases the same.

If the student, after resolving an object in this imaginary way, will carefully study, or imagine, the proper location of



Digitized by Google

these points in their relation to the object itself, defining their positions on the drawing one at a time, much that may appear complicated at first sight will resolve itself into very simple and comparatively elementary work. Complicated work is usually nothing more or less than the aggregation of a number of simple operations that appear complicated only because they are combined. *There is no field of work to which the latter statement is more applicable than to that of the pattern draftsman.*

It is in the "imaginary" way thus described that the student is directed to picture to himself each figure as presented to him for the making of the drawings on the plates. This part of the study is, as will be noticed, almost entirely the work of the imagination; but it should be practiced by the student for the sake of the assistance it will be to him later on.

The operations of projection drawing follow one another in a natural sequence, which we will proceed to trace out in a series of drawing plates. As the student follows these operations, keeping in mind the foregoing principles, he will have no difficulty in making or reading any drawing.

## PLATES.

**21.** Seven plates are to be drawn by the student in accordance with the directions given in this section. Copies of the first two plates are sent with this Paper; copies of the remaining plates will be sent as the student requires them. The plates drawn by the student are to be of the same size as those drawn for *Geometrical Drawing*, and the same general instructions regarding the preparation of the plates are to be observed; they must be drawn and sent to us for correction in the same manner.

The letter heading for each problem, which has heretofore been placed on the drawing, will be omitted, and the student is required only to designate each plate with the letter heading, or title, that is printed in heavy-faced type, both

Digitized by Google

Digitized by Google

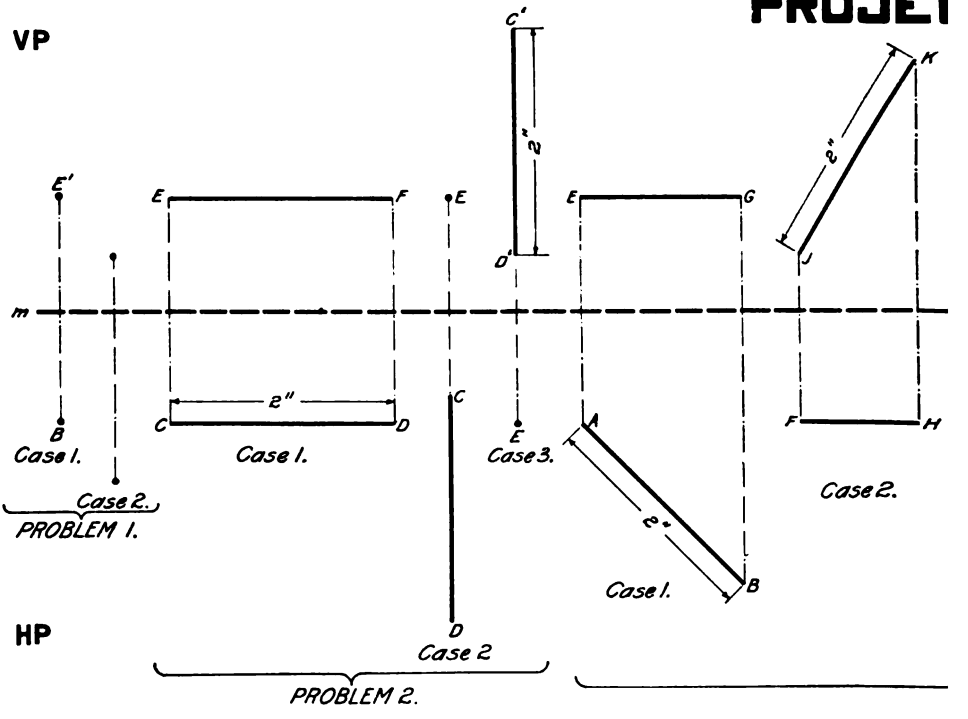


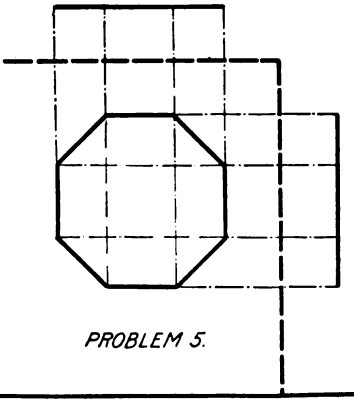


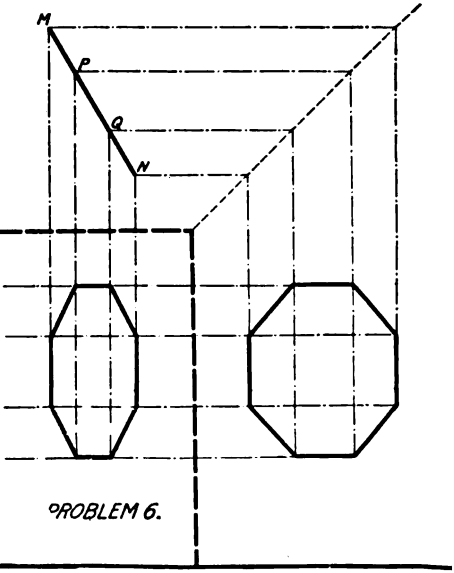


JUNE 25, 1893.

Copyright, 1899, by THE Co
All righ
Digitized by Google

# ECTIONS-I.

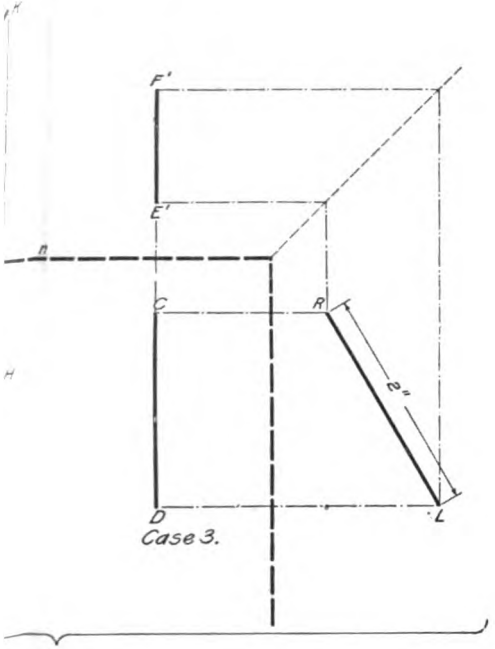

Case 3.

PROBLEM 3.

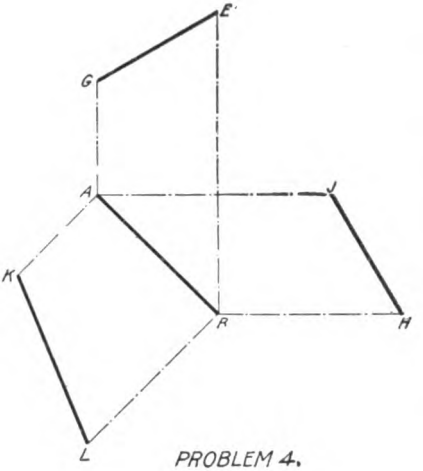

PROBLEM 4.

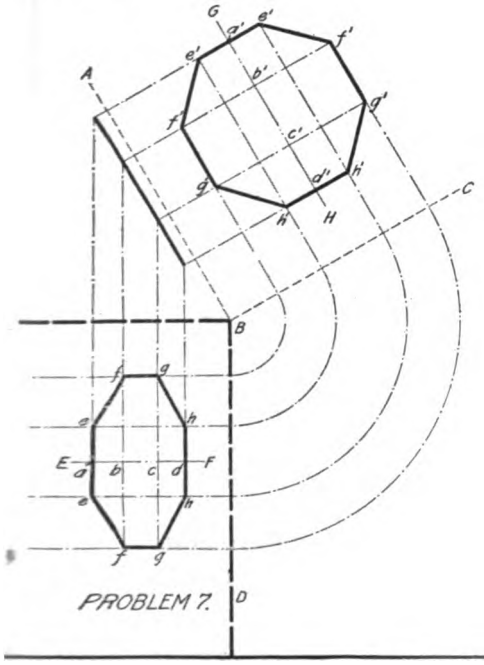

PROBLEM 7.

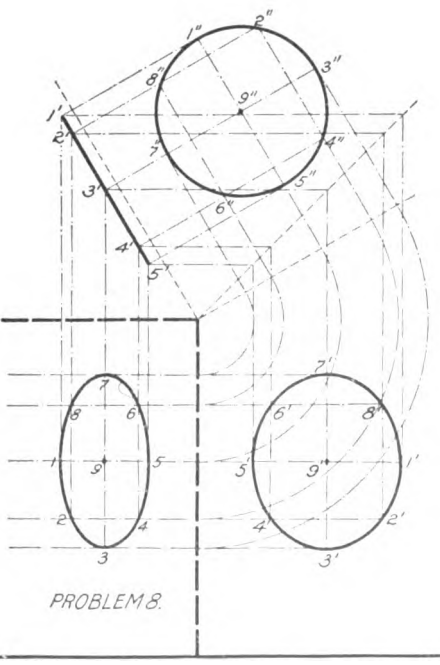

PROBLEM 8.

IERY ENGINEER COMPANY.

eserved.

JOHN SMITH, CLASS Nº 4529.

Digitized by Google

Digitized by Google

in this section and on the reduced copies of the plate. For this purpose the *block-letter* alphabet is used.

**22.** The dimension lines and figures shown in the first three problems of the drawing plate, title : Projections I, are to be especially noticed by the student. They are ordinarily used in all working drawings, and preference is invariably given to a dimension figure, rather than to the scale to which a drawing is made. Dimension figures are not to be placed on the plates, since the object in requiring the student to draw these projections is rather to enable him to gain an idea of their principles than to be able to make a finished working drawing.

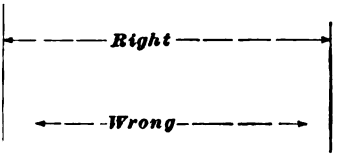

FIG. 2.

Dimension and extension lines when used should be light broken lines. Care should be exercised to make the arrowheads as neatly as possible and of a uniform size—not too flaring. They are made with a steel writing pen, and their points should touch the extension lines, as illustrated in Fig. 2.

---

## DRAWING PLATE, TITLE: PROJECTIONS I.

**23. General Instructions.**—This plate is divided into four equal spaces, and each of these divisions, with the exception of the upper left-hand space, is again divided, by means of a central vertical line, into two equal parts. Use light pencil lines, as they are not to be inked in and are intended only to facilitate the location of the problems. These lines are not shown on the printed copies of the plates. Before attempting to draw any of the problems on the plate, the explanations accompanying each problem should first be carefully read and compared with the reduced copy of the plate and also with the illustrations in this section. The principles of projection drawing will thus be better understood by the student, and their application readily made when more difficult drawings are undertaken.

Digitized by Google

*The fundamental laws of projection are contained in the first four problems, and if these are thoroughly mastered by the student, the application of the laws to the remaining problems will be comparatively easy.*

**24. Why Different Views Are Drawn.**—The names of the different views have already been noted; in this plate it is shown how they are distinguished from one another in a drawing. The relation of the different views to one another will also be explained.

Some objects in certain positions may have all their dimensions represented in two views—a plan and an elevation—but generally three views should be drawn. There are, indeed, many cases where views from each of the six sides, as well as sections and views taken from oblique positions, are necessary. It has already been observed that lines are represented in their true length only when at right angles to the lines of sight; consequently, since the position of the object in any set of views is not changed, it is necessary to change the position of the observer in such a manner as to bring the lines of sight where they will be at right angles to the lines in the object, thus enabling the latter to be shown in their true length on the drawing.

The student will readily perceive that in pattern drafting it is of the highest importance that the lines which combine to make up the surfaces of any object should be shown in their *true length*, or at least be presented in such positions that their true lengths may be easily found. Without these true lengths, no measurements can be obtained from which to lay out the patterns, a pattern being merely a representation of the surfaces of some solid. It is necessary, therefore, to be prepared to take views of any object from any position; for there are many different forms, or shapes, of solids, and it is necessary to be able to show in its true length any line in the object that may be needed for a pattern.

**25. The Base Line.**—We shall first consider objects in positions that may be shown in two views. Draw a horizontal line through the central portion of the upper left-hand

Digitized by Google

space on the drawing, as at *m–n* on the plate. In the portion of the space below this line are to be drawn the top plans of each of the two simplest forms, viz., the point and the line. The space above this line is to contain the elevations of the same forms. The line thus drawn is called a **base line,** and defines the boundary of the surfaces on which we are to "sight," or, as we shall say hereafter, on which we are to *project* the lines of sight. It is necessary to call the imagination into use again, and imagine the paper to be bent up at a right angle on this line.

**26. Planes of Projection.**—The drawing paper is imagined to be the surface that intercepts the lines of sight, and in the case of a plan, as seen from instruction already given, must be a horizontal surface; while in the case of an elevation, it is imagined to be a vertical surface. The different portions of the drawing on which the projections are made are called **planes of projection,** and are also distinguished by other names that designate the position they are supposed to occupy in intercepting the lines of sight. That portion of the drawing on which the elevation is drawn is called the **vertical plane** of projection; it is represented on this plate by the space above the base line; the portion below the base line is devoted to the plan, and is called the **horizontal plane** of projection. We shall, for the sake of brevity, refer to these surfaces by the use of the letters **V P** and **H P**, respectively. Copy these letters into the upper and the lower left-hand portion of their respective spaces on the drawing, using for that purpose a block letter one-half the size of the title letter, and leaving a distance of $\frac{1}{4}$ inch from the border lines of the spaces.

**27. Foot of the Line of Sight.**—Before proceeding with the drawing of this plate, it is desired to call the attention of the student to the distinction to be observed between the *imaginative* and the *practical* features of this subject. The imaginative feature is employed when a conception of an object is formed by the student in accordance with the instruction in previous articles, and also when the lines of

Digitized by Google

sight are applied in the imaginary way, as in the "sighting" illustrated in Fig. 1. The application of the practical feature in this instance is made when the position of each division of the rule is indicated on the drawing by a pencil mark or dot. The practical part of the work is always accomplished by the aid of pencil and drawing instruments.

The two features are closely associated, since we cannot have a practical representation of any object without first having an idea, or an imaginative conception, either of the object itself or of the means of projection. The practical feature of the work was introduced in the illustration (Fig. 1), when a mark or dot was made on the paper, thereby indicating the position of the point at which the line of sight was intercepted by the plane of projection.

That point on any plane or drawing where a line of sight is intercepted is called the **foot** of the line of sight. When the foot of every line of sight that can be used on the elementary points of any object is thus represented on the drawing by dots, and connecting lines are drawn between such dots, the drawing is completed, and the object is said to be "projected."

**28. Projectors.**—If but one view of an object were required, the use of the lines of sight as previously explained (representing the imaginative feature), and the drawing of the dots and lines referred to in the previous article (representing the practical feature), would be all that is necessary for the student to understand before proceeding with the work on the drawing board.

Since it has been shown that several views are required, another important practical feature must necessarily be explained. This relates to the connection usually established between the different views of a drawing and the lines that are drawn in a certain manner between corresponding points in each view. These lines are usually not represented in a finished drawing, since they are in the nature of construction lines. They are essential, however, to the work of making the drawing, and it is very important that the student should

Digitized by Google

thoroughly understand the principles by which they are employed. These lines are called **projectors,** and may be defined as the *trace* of a line of sight, or the representation of the foot of a line of sight moving in a certain direction. Projectors are used in two ways, which are distinguished from each other for the present by the terms *primary* and *secondary*.

**29. Primary Projectors.** — This use of projectors is illustrated in Fig. 3, which shows the drawing bent up at a right angle along the base line *m–n*. The point *A* is projected to **H P** by the vertical line of sight *CB*; it is also

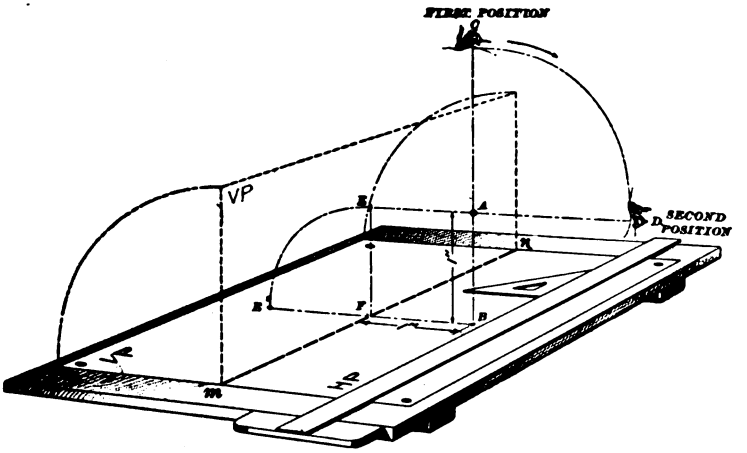


FIG. 3.

projected to **V P** by the horizontal line of sight *DE*; *B* and *E* are dots at the foot of each line of sight.

It is assumed that the first position of the observer is at *C*; he then moves, in the direction of the arrow, along the dotted line to *D*. If, in so doing, he continues to sight through the point *A*, it is apparent that a line will be traced from *B* to *F* on **H P**, and from *F* to *E* on **V P**. The upright portion of the drawing **V P** is now imagined to be bent backwards until laid flat on the drawing board, and it is evident that *EFB* is represented on the flat surface of the two planes of projection by the straight line *E'FB*. It may

Digitized by Google

therefore be drawn as a straight line by the aid of the triangle and T square, the position of the point $A$ in each view being determined by the points $B$ and $E'$ at the extremities of the line. These points (or dots, for points, being entirely imaginary, could not, of course, be actually represented)* $B$ and $E'$ are the projections of the point $A$—the line drawn between them ($BFE'$) is called a *projector*. When projectors are used as in this illustration—that is, between two planes that may actually be bent up as shown in Fig. 3—they are said to be used in a *primary* manner.

The *secondary* use of the projector will be shown in connection with Problem 3, Case III.

The practical use of the projector is clearly shown in the following problems. It is a most important factor in the projection, and, as will be seen from instruction soon to follow, is often the first line to be used in a drawing.

---

PROBLEM 1.

**30. To project the plan and elevation of an imaginary point.**

There are two cases of this problem, representing different positions of the point. Definite instructions are given for drawing the first projection, and the student is expected to draw the second projection without further directions.

---

*Attention has been called to the fact that points, lines, and surfaces are entirely imaginary geometrical forms. This is true in the sense that the student must consider such forms in the imaginative study of this subject. When their representation on the drawing paper is considered, however, something that can actually be seen by the eye is required. Therefore, when a point is referred to in this section as pertaining to the drawing, it is to be represented by a neat dot in the proper place on the paper. In like manner, a line should be represented by a fine pencil mark drawn between two points marking its extremities. When the line is to serve a special purpose, as explained in this section, it is inked in in a particular manner characteristic of its use, in order that the drawing may be more easily read. A surface, therefore, would be represented by a portion of the drawing bounded by the proper lines and descriptive of the form of surface represented. Remember that accurate work cannot be done unless the pencil points are in good condition. The student should provide himself with a smooth file or piece of fine sandpaper and frequently sharpen the chisel point of the leads in both pencil and compasses, in order that fine sharp lines may be readily drawn.

Digitized by Google

**Case 1.**—*When the point is located 1 inch from each of the two surfaces* **V P** *and* **H P.**

This position is illustrated in Fig. 3, referred to in Art. **29.**

CONSTRUCTION.—Fix a point $B$ (see plate) 1 inch below the base line on the drawing. This point should be $\frac{5}{8}$ inch from the left-hand side of the drawing, and is the plan view of the point given in the problem. Bring the **T** square and triangle into position and draw the projector vertically upwards and across the base line. Fix a point at $E'$ on the projector 1 inch above the base line. A projection drawing is thus made, showing two views—a plan and an elevation —of the required point, the position of which is thus definitely established.

Fig. 3 is an illustration of the imaginative feature, and the projection drawing just made is a representation of the practical feature of the work—the part actually made by the draftsman. The intimate connection between the two features may be seen if the drawing just made is compared with the illustration in Fig. 3. Similar results are found to have been accomplished in both cases, the method last employed being the only one practicable for actual use. When inking in this drawing, make small round dots to represent the positions of the points, and always ink in projectors as light dot-and-dash lines, as shown on the plate. These dot-and-dash lines should be inked in in a uniform manner, as on the plate, the dashes being about $\frac{1}{4}$ inch in length and spaced about $\frac{1}{16}$ inch apart, with a light dot between each dash. Measure the distances by the eye, and preserve a uniform shade for all projectors, thus giving the drawing a neat appearance. The base line should be represented by a heavy dotted line, as shown at $m$–$n$ in the perspective illustration of Fig. 3.

*When making the preliminary drawings, do not attempt to draw dotted lines with the pencil, since this is liable to affect the accuracy of the work.* Keep the chisel point of the pencil sharp, and draw as fine a line as can be distinctly seen. The contrast between the different lines on

Digitized by Google

the drawing may then be clearly indicated when the work is inked in.

**Case II.**—*When the point is located 1½ inches from* **V P** *and ½ inch from* **H P**.

The student will fix the location of the point in the plan and elevation on the drawing without further instructions, bearing in mind the fact that distances from **V P** are measured on the plan and distances from **H P** are shown in the elevation. Reference to Fig. 3 explains this statement. Case II should be placed on the drawing about ½ inch to the right of the preceding figure.

---

PROBLEM 2.

**31. To project the plan and elevation of an imaginary line, the line being in a right position.**

The term *right* position is used in connection with projection drawing as distinguished from the terms *inclined*, or *oblique*, position. The line, therefore, can be either in a horizontal position or in a vertical position and still be designated as in a *right* position. There are three figures for this problem, representing three cases where the line is in a right position and yet represented differently on the drawing. The different positions, the various distances, and the length of the lines for the three cases of this problem are clearly illustrated in the perspective drawings shown in Figs. 4, 5, and 6. Instructions are given for the drawing of Case I on the plate, but the student is expected to be able to make the drawings for Cases II and III without further directions than those contained in the illustrations. Be careful to preserve a distance of ½ inch between the drawings, so that the plate may present a neat appearance when completed.

**Case I.**—*When the line is parallel to both* **H P** *and* **V P**.

EXPLANATION.—This position of the line is illustrated in Fig. 4, and, as apparent from that figure, the drawing is merely an extension of Problem 1. Each end of the line

Digitized by Google

is treated as a point, projected first to the plan and afterwards to the elevation in precisely the same manner as was the point in Problem 1, the only difference being that there are two points instead of one, for we cannot have a line without establishing at least two points.

This problem also illustrates another principle of projection already referred to, viz., all lines at right angles to the lines of sight, in any view, are shown in that view in their true length; or, in other words, the lines that are to be

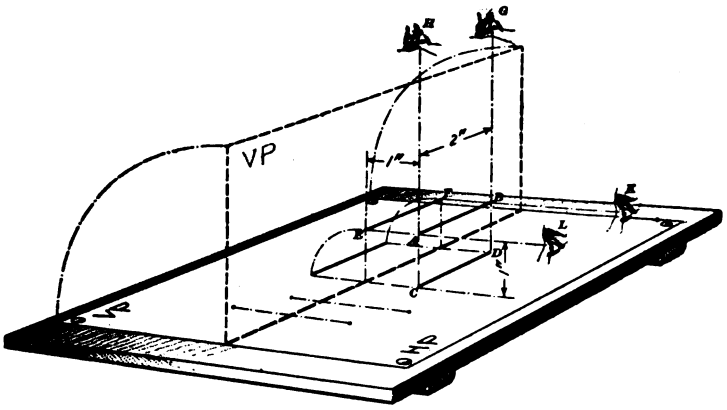


FIG. 4.

made on the drawing to represent the plan and elevation of *A B*, Fig. 4, will be of the same length as *A B* is indicated in the figure, viz., 2 inches. The angles *H A B* and *L A B* are right angles, although shown in perspective in the figure; and, since the lines of sight in any view are always parallel to each other, the angles *G B A* and *K B A* must also be right angles; consequently, as the line *A B* is at right angles to the lines of sight in both views, it must be shown in its true length in both the plan and the elevation on the drawing.

CONSTRUCTION.—To make this drawing on the plate, draw a horizontal line of the given length and the proper distance (i. e., 1 inch) below the base line. This will be the plan of the line *A B*. From each end of this line (*C D* in

Digitized by Google

Fig. 4 and on the plate), draw projectors to the elevation; or, to use the term by which such operations are designated, project the ends of the line *CD* to the elevation. After measuring off the proper height above the base line, draw the horizontal line *EF*, which is the elevation of the line *AB*.

NOTE.—When a point is projected from one view to another, its projector (a straight line) is drawn from the first view to the view projected, and always at right angles to the base line.

**Case II.**—*Where the line is in a horizontal position and at right angles to* **V P**.

EXPLANATION.—Fig. 5 illustrates this case. It will be noticed that the plan view of the line does not differ very much from the plan of the line given in Case I, merely that it is represented by a vertical line on the drawing in the plan in place of a horizontal line, as in Case I. The

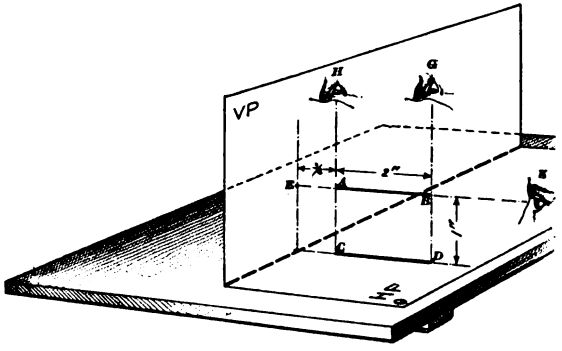


FIG. 5.

line *AB* is at right angles to the vertical lines of sight *GD* and *HC* in both cases. The line *AB* in this figure is in such a position that the horizontal line of sight *KE* passes through both points *B* and *A*. The projection of these points, therefore, on the elevation is the single point *E* at the foot of the line of sight *KE*. A single line of sight may pass through an unlimited number of points in any view, but the foot of such line of sight is always represented in that view by *one* point on the drawing. The student who

Digitized by Google

is to read that drawing must picture to himself, or imagine, the position of these points as they are supposed to exist in the object of which any drawing is a representation. It is further to assist his imagination that other views are drawn, and by means of which the position of the different points may be definitely located. Thus, in this case, if we were to consider the elevation alone, without paying any attention to the plan, we would say that the point $E$ represented merely some other point (imaginary, of course) that could be situated anywhere on the line of sight $A E$. A glance at the plan, however, shows not only where the location is, but how many points are represented. In this case, there are two points represented by $E$, one directly in line with the other. The plan also shows how far apart these points are, and from the two views it can be further seen that the line is in a right position perpendicular to **VP**. If it were not, the two points would not be in the same line of sight, and would, consequently, require two positions on the elevation, whereas they are designated by the one position $E$, Fig. 5.

CONSTRUCTION.—Since the drawings for this case have been shown in the preceding explanation to be similar to those of Case I, no definite instructions need be given. The

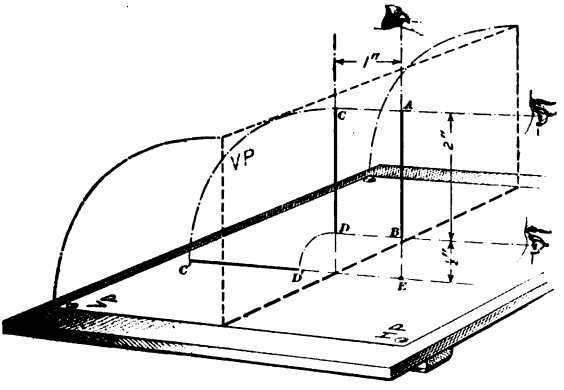


FIG. 6.

two drawings differ in position only, and are drawn as shown on the plate, the plan being first constructed.

Digitized by Google

**Case III.**—*Where the line is in a vertical position.*

This is shown in Fig. 6, each feature of which has already been explained in connection with Figs. 4 and 5. The drawing may, therefore, be made by the student in accordance with the dimensions given in the illustration.

**32. Proof of a Projection Drawing.** — The various cases of the foregoing problem represent lines in different positions, and, as in the case of the point in Problem 1, the student will see that these projections definitely represent the position of each line; further, that for each position indicated, but one line can be placed, or can occupy that position. It is recommended that the student prove this assertion as follows: Copy the projections of this problem on another piece of paper and bend the paper at right angles along the base line, as shown in the illustrations; take a piece of small wire of the given length, to represent the lines, and proceed to hold it, in turn, over the drawing for each case—at the same time "sighting," or using the lines of sight, as illustrated. It will be seen that, in order to make the foot of each separate line of sight come to the proper place on the drawing, the wire must be held in the position indicated in the statement of the case.

---

PROBLEM 8.

**33. To draw the projections of an imaginary line in a rightly inclined position.**

There are three cases of this problem, in all of which the given line is *rightly inclined;* that is, the angle of inclination is such that the true length of the line may be shown in either a plan, a front elevation, or in some elevation that shall be at right angles to the front elevation. The different cases of this problem are presented in perspective views, from which the projection drawings are to be made by the student. They illustrate the principles of foreshortened views.

Digitized by Google

**Case I.**—*Where the line is horizontal, but inclined to* **V P** *at an angle of 45°.*

EXPLANATION.—This is shown in Fig. 7, which gives all the dimensions and distances necessary to enable the student to draw the projections on the plate. The student will note

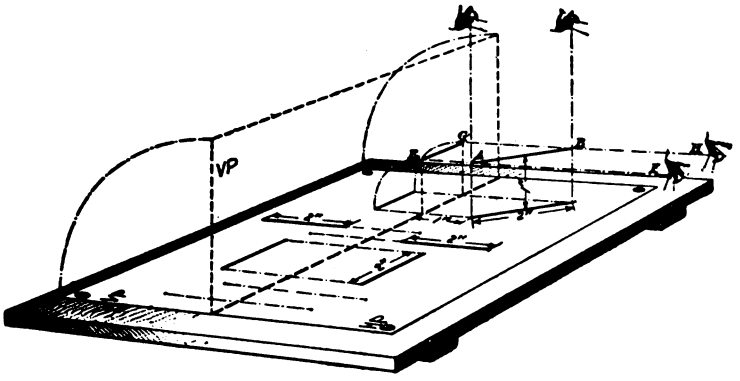


FIG. 7.

the position of each point and carefully observe the instructions for making the drawings. Bear in mind that, although the drawing is only that of a single line, careful study must be given to it, for the principles on which these simple projections are made are the same as for any other projection drawing. These principles are shown in a more comprehensive way in simple problems than if an object of complex form were presented, requiring a confusing number of points to define its outline. In Cases I and II of this problem, the plan is first to be drawn and the elevation projected therefrom.

CONSTRUCTION.—Since the line in Case I is in a horizontal position, and therefore at right angles to the vertical lines of sight, it will be shown in its full length on the plan. The line is stated to be inclined to **V P** at an angle of 45°; draw the plan, therefore, at that angle to the base line and at such distance below the base line as indicated in Fig. 7 and shown at *A B* on the plate. Project the points *A* and *B* to the elevation, and at the given height above the base line

Digitized by Google

draw a horizontal line between the projectors. This is the elevation of the line shown in the plan, and, since its entire length is contained between the horizontal lines of sight $FE$ and $HG$, Fig. 7, the line cannot be shown on the elevation as being any longer than the perpendicular distance between the projectors. This distance being less than the actual length of the line, the elevation is, in this case, called a *foreshortened* view of the line. It represents, however, the entire line, and reference to the plan is necessary in order to find its true length.

**Case II.**—*Where the line is parallel to* **VP** *but inclined to* **HP** *at an angle of 60°.*

CONSTRUCTION.—Fig. 8 shows that the plan is to be represented by the horizontal line $FH$. It also gives the length of the line in the plan, which is a foreshortened view. Therefore, draw $FH$ 1 inch long and 1 inch below the base

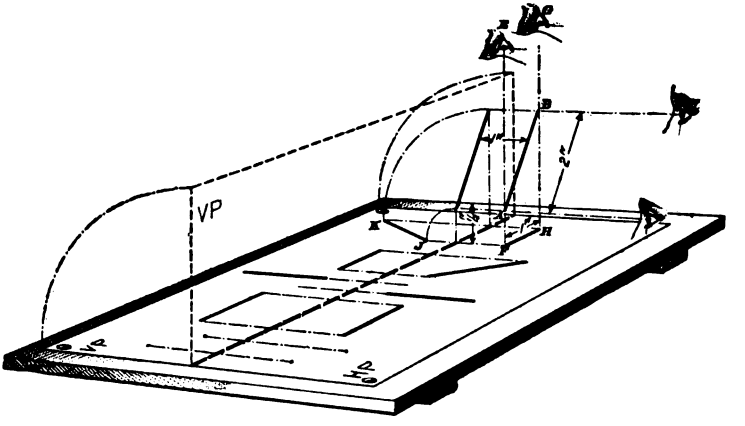


FIG. 8.

line. Draw the projectors and fix a point at $J$ on the projector drawn from $F$, at the proper distance above the base line. This will be one end of the line in the elevation. With the compasses set to 2 inches (the length of $AB$) and using the point $J$, fixed on the projector drawn from $F$, as a center, describe an arc intersecting the other projector. The

Digitized by Google

point that represents the other end of the line is located at this intersection, and the line may then be drawn. Now bring the T square into position and prove by the triangle that the line $JK$ is at an angle of 60° with the base line. It will be seen that it would have been possible, after fixing the position of a point at either end, to have drawn the line at once with the 60° triangle. Attention is called to both methods in order to show the student the connection between them.

**Case III.**—*Where the line is rightly inclined to* **V P** *at an angle of 60° and is also inclined to* **H P.**

EXPLANATION.—In Cases I and II, the line has been in such positions as to enable its full length to have been shown in one of the views drawn on the plate. In this case, a position is illustrated in which the line is shown foreshortened in both of these views. It will therefore require another view to be projected, in order that the line may be shown in its true length. Since it is known that the line is rightly inclined, the additional view required will be at right angles to the base line. As another view is to be drawn, so another base line will be required. This base line, being merely the lower boundary of a surface supposed to be in an upright position to receive the lines of sight, and at right angles to the surface of the elevation previously drawn, will, consequently, be at right angles with the base line in a drawing that shows only two views—such drawings as have thus far been made.

Fig. 9 contains the given dimensions, etc. for this position of the line. This perspective figure shows the interception of the lines of sight from still another direction than has been shown in the preceding illustrations. In the same manner, a view may be obtained from any side of an object, or at any angle other than a right angle. The method of accomplishing these results by the use of the T square and triangle on the flat surface of the drawing board will now be shown, and the illustration of the bent-up surfaces will not be continued beyond this problem. Such illustrations



Digitized by Google

are, however, always implied in a projection drawing, for that part of the work is the imaginative feature previously mentioned, to which the attention of the student will be directed throughout this instruction.

Since the angle of inclination to the elevation is the same in this case as in the plan of Case II, the length shown on the elevation of this projection will be the same as in the plan of that case. In this drawing, the line is, however, in a different position as related to the plan, and from Fig. 9 it will be seen that it must be represented by a vertical line in that view on the drawing.

CONSTRUCTION.—Extend the base line on the plate to the center of the next space, from which point draw a vertical

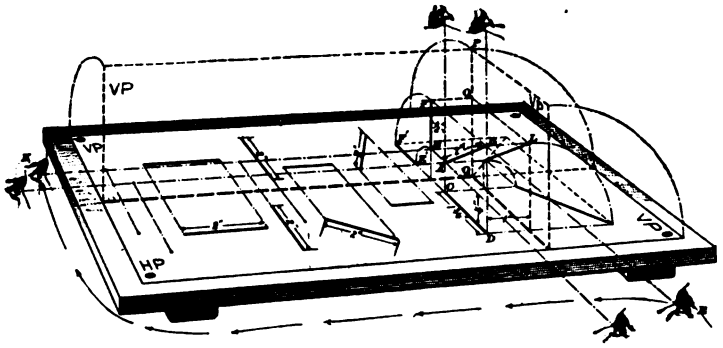


FIG. 9.

line downwards to the division line; these lines are to be inked in the same as the base line in the first space. In the smaller space thus enclosed on the drawing is to be drawn the plan for this problem, the front elevation occupying the same relative position as before, directly above the plan, while in the space at the right the side elevation will be projected. First, draw the elevation as at $E'F'$ on the plate, fixing the point $E'$ at the specified distance above the base line. As the foreshortened length in the plan is given in Fig. 9 as $1\frac{3}{4}$ inches, draw the line $CD$ of that length, as shown on the plate, keeping the point $C$ at its proper distance below the base line, as indicated in Fig. 9. The view

Digitized by Google

to represent this line in its true length may next be drawn. It is known that this view must be one in which the line itself is represented at right angles to the lines of sight. There is a choice of two views for this projection—either to the right or to the left side. Having already utilized the space to the left on the plate, the side elevation is, in this case, projected to the right. The method employed in Case II might here be used to project the side elevation, but since it is customary, when a number of elevations are projected from the same plan, to facilitate the operation by drawing, between such views, lines that are termed *secondary projectors*, an explanation of their use is here presented.

**34. Secondary Use of the Projector.**—The term *secondary* is not applied in the case of projectors as indicating an unimportant or infrequent application of these lines. The name is used rather to distinguish operations in which similar principles, as applied to the imaginative features, are differently represented on the drawing in the application of the practical features of the work. In fact, both uses of these lines are required in most drawings. It is therefore essential that the student should become familiar with the various means employed in producing them on the drawing.

**35.** It is evident, from an inspection of Fig. 9, that the eye of the observer at $E$, in moving around along the broken line in the direction of the arrows to take position at $K$, would trace a line from $F$, through $O$, to $L$. The part of this line ($FO$) that shows on the front elevation is parallel to the base line of that surface; and also, the part of that line ($OL$) shown on the side elevation is parallel to the base line of the side elevation. It is seen that the definition of the projector, as previously given, applies equally to the lines $FO$ and $OL$. If the two planes of projection represented by the two upright surfaces could be bent in the same relation to each other as were the plan and the elevation in Fig. 3—i..e., on the line $PQ$, Fig. 9—the use of the projectors in these views would be no different from that already described. It is customary, however, to assume that such

Digitized by Google

upright surfaces are always bent downwards and away from the plan; to accomplish this result, the secondary use of the projector is employed. Suppose, now, that the upright surfaces, represented in Fig. 9, were bent backwards until laid flat on the drawing board. Evidently, there would be an appearance presented similar to that shown in Fig. 10, and

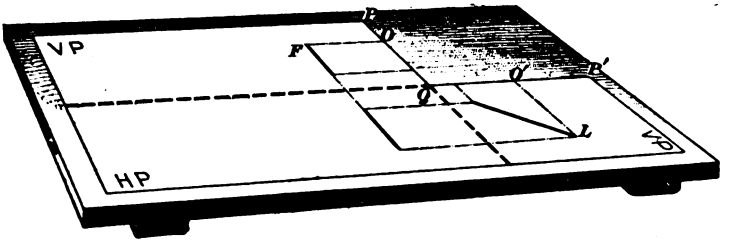


FIG. 10.

an open space would be shown on the drawing board included between the angle $PQP'$. The paper on which the drawing is made is not of an irregular shape, thus to be bent up at will; further, the operations performed in projection drawing are such that they can be accomplished only on the flat surface of the drawing board.

**36.** It is found that similar results may be obtained in two ways, both being easily affected by the aid of the drawing instruments. The first is known as the *angular* method, and is thus accomplished: If the projectors $FO$ and $O'L$, Fig. 10, or any other corresponding set of projectors, parallel to their respective base lines, are extended until they intersect each other, it is found that *all the intersections are on a diagonal line terminating exactly at the intersection of the base lines.* It is also found that *this diagonal line exactly bisects the outer angle formed by the base lines.* Applying these principles, therefore, to the drawing, bisect the outer angle formed by the base lines on the plate and produce the bisector indefinitely toward the right-hand side of the space. The outer angle formed by the base lines in this case being an angle of 270°, the bisector may be drawn with the 45° triangle, since a line thus drawn will be at an angle of 135° with both base lines.

Digitized by Google

**37.** Fig. 11 is a reproduction of the projection drawing from the plate, showing the bisector drawn as previously directed. Draw $F'x$ and $E'y$ parallel to the base line in the front elevation ; from their intersections with the bisector at $x$ and $y$, draw $xL$ and $yR$ parallel to the base line in the side elevation. Project the points $C$ and $D$ from the plan to the side elevation by the use of primary projectors, as previously described. The side elevation of the line $AB$ of Fig. 9, then, is a line drawn between points of intersection of the primary with the secondary projectors, as shown by $RL$, Fig. 11. The lines $F'x$, $xL$ and $E'y$, $yR$ are called *secondary* projectors, and are used, as in this case, when projecting points between views that are related to one another in the manner shown. Projectors are used in a similar way when, for reasons that will be shown later, the base lines are at an angle other than a right angle. In all cases, the outer angle is bisected as shown in Fig. 11, and the secondary projectors are drawn parallel to their respective base lines.

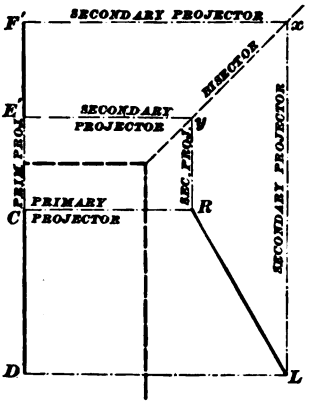

FIG. 11.

*Note that the front elevation, shown in Fig. 11, is a foreshortened view, and corresponds in length with the perpendicular distance between the secondary projectors in the side elevation.*

**38. Reading a Drawing.**—The ability to read a drawing consists of the intelligent comparison of the different views, and is well illustrated in the projections just drawn. The different views—or the different *projections*, as they are called—must never be considered as drawings apart from one another. Each projection is shown to be necessary in order to enable the position of some point or element of the object to be established in the reader's imagination.

Digitized by Google

PROBLEM 4.

**39. To draw the projections of an imaginary line in an obliquely inclined position.**

The projections of this problem are to be drawn by the student in the next space on the plate, following the instructions here given.

CONSTRUCTION.—Draw the base lines as in the last space used for Problem 3, but place the lines $\frac{3}{4}$ inch higher on the plate and extend them $\frac{1}{2}$ inch farther to the right in the space. These base lines will be used in the construction of the projections as before, but will not be inked in on this drawing; they are construction lines only—to be erased from the plate after the drawing is completed. It has been shown that base lines are necessary for determining the position of the different points on a drawing, and are essential in establishing the first few points in any projection; but as the drawing progresses and other lines are produced, any right line in a view—i. e., a line at right angles to the lines of sight—may be used as a base from which to establish the position of points in a drawing.

Represent a foreshortened view of this line in the plan by a line $1\frac{1}{2}$ inches long, drawn at an angle of 45° with the base line of the front elevation, as shown at $A\,B$, Fig. 12; draw the front elevation (also a foreshortened view) at an angle of 30° with the base line. Draw the line $A\,B$ in the plan and $G\,E$ in the front elevation in such positions that the end of either line nearest to the base line shall be $\frac{1}{2}$ inch from that line. Next draw the side elevation as explained in Problem 3, Case III, and it will be seen, when the side elevation is completed, that $H\,J$ is also a foreshortened view, not representing the true length of the line.

An elevation will now be projected in which the line may be shown in its true length. This will be an elevation whose surface is parallel to the line. Draw the base line of this surface $\frac{1}{2}$ inch from the line $A\,B$ on the plan and parallel to that line, as at $C\,D$, Fig 12. This figure is an illustration of the projection drawing, showing all the lines used

Digitized by Google

in its construction, certain of which, as already explained, are not to appear in the completed drawing on the plate. Note that the oblique elevation $KL$ is projected in the same manner as the side elevation was drawn, the only difference being that the outer angle $ODC$, formed by the

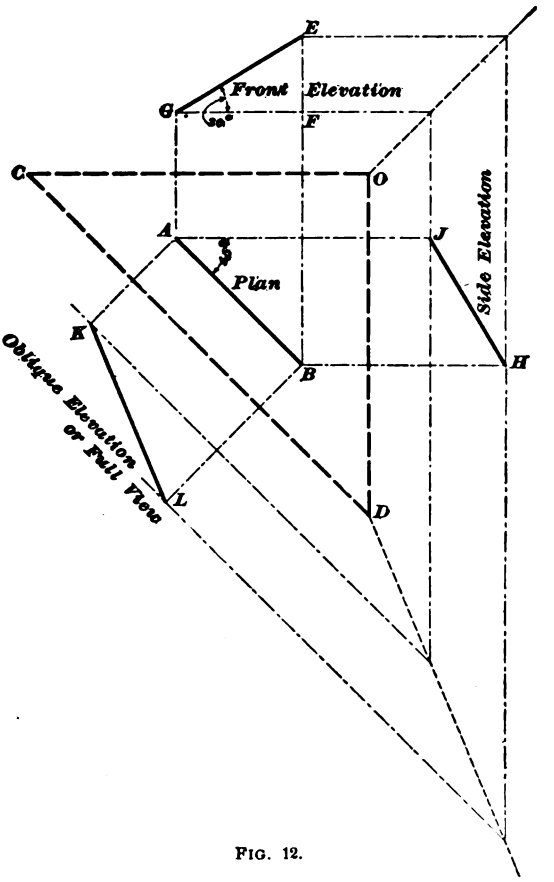


FIG. 12.

base lines, is greater than a right angle, but is treated in the same way. This completes the problem, and in finishing the figure on the plate, the student will ink in only the different views and the primary projectors, erasing all other construction lines.

Digitized by Google

**40. Finding True Lengths by Triangles.**—It is possible to find the true lengths of lines from a plan and any elevation showing such lines obliquely inclined, by a shorter method than that given in Problem 4. This is accomplished by the use of the right-angled triangle.

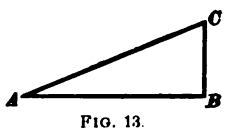

FIG. 13.

If such a triangle is constructed, with its base equal to the length of the line shown in the plan and its altitude equal to the vertical height shown in the elevation, the hypotenuse will be equal to the true length of the line. This is shown in Fig. 13, in which $A\,B$ is made the same length as $A\,B$, Fig. 12, and $B\,C$, Fig. 13, is equal to the vertical height shown in the elevation, i. e., $E\,F$, Fig. 12. Since $A\,B\,C$ is a right angle, the hypotenuse $A\,C$, Fig. 13, is equal to the true length of the line. This statement is of the greatest importance to the draftsman and should be proved by the student. Construct a triangle on a separate piece of paper and set off the lengths from the drawing with the dividers; afterwards compare the length of the hypotenuse with the length of the line shown in the oblique elevation, or full view. This is an illustration of a principle of much use in later problems, and one on which certain important principles of patterncutting depend.

**41. All Projections Depend on Similar Principles.** There is no conceivable position of a line that may not be shown, or its true length not be ascertained, by the application of the principles contained in the foregoing simple problems. Lines have been used to illustrate these problems drawn at such angles as were conveniently made with the T square and the 45° or 60° triangles, but any angle or any position could as well have been represented, since the principles are in any and all cases the same. We will now proceed with the representation of flat, or plane, surfaces.

**42. Planes, or Plane Surfaces.**—All drawings made to represent surfaces are composed of lines that bound, or limit, their borders, or sides. These drawings, therefore,

Digitized by Google

will differ from those of the foregoing problems only in the fact that they are the representation of lines shown in their relation to one another. There are, however, certain principles relating to flat, or plane, surfaces that must be borne in mind, since they influence this relation of the different lines in a drawing.

**43.** That the student may have a thorough knowledge of the principles employed in the representation of surfaces, it is essential that he first have a clear conception of what a plane is. A plane surface, as has been stated, has only an imaginary existence, being bounded, or enclosed, by imaginary lines; this surface may be in any conceivable position, but is always a flat surface. If viewed from a certain direction—viz., as if "on edge"—it would be represented by a single straight line. If the student can imagine a plane surface indefinitely extended in every direction beyond the boundary lines of the figure, he will have a very good conception of a plane; any number of points or lines, the positions of which are anywhere on this surface thus extended, are said to be "in the same plane" in relation to one another.

**44.** To illustrate: Suppose two flat-top tables of the same height are on the floor of a room perfectly level and of indefinite extent. Here is a practical representation of two planes, both of them in a horizontal position; one plane is represented by the floor, while the other plane is parallel to the first and "passes through" the tops of the tables. The surfaces represented by the tops of the tables are said to be "in the same plane." The tables may be placed some distance apart, yet the straight edge of a ruler laid across their tops would exactly coincide with the upper surfaces of both tables, and would remain in contact at all points for every position of the ruler.

The plane surface represented by the top of one table is said to be "in the same plane" as the corresponding surface of the other table. The same could be said with reference to any other surfaces answering the same test. Any number

Digitized by Google

of flat surfaces are said to be in, or to "lie in," the same plane with one another, and the same is true of any lines or points used to define any surface or position in that plane.

The planes in the foregoing illustration of the floor and tables are horizontal planes, but may be imagined in any position, vertical or inclined, needed for the projections of a drawing.

**45. How the Position of a Plane Is Determined.** Since any two points determine the position of a line, so any three points, not in the same straight line, determine the position of a plane. To illustrate: Take a square piece of cardboard, thick enough to remain flat, and push pins of equal length through each of the four corners so that they will resemble the legs of a chair. The object will stand firmly when placed on a level surface with the points of the pins down, for the reason that all the points represented by the ends of the pins are in the same plane. If one of the pins is withdrawn and a shorter one inserted in its place, the cardboard will not be stable when placed as before, and can be "rocked," for the point at the extremity of the short pin is not in the same plane with the other three. Two planes are thus defined—one determined by points at the extremities of the three long pins, and the other by points at the ends of the short and the two adjacent pins. Both of these planes may be imagined as extended indefinitely, one plane being inclined to and intersecting the other.

Again, a flat sheet of metal may be supposed to represent a plane surface. All points that may be located on this sheet are in the same plane; but if a sheet that is "buckled" is chosen, it is possible to locate some points on the surface of that sheet higher or lower than others, and the points would then be in different planes. The connection between the plane and the plane surface, then, is such that, to be defined as a plane surface, every point on that surface must be in the same plane.

**46.** In drawing different views for the illustration of the plane surface, we shall first use the octagon, requiring the

Digitized by Google

projection of eight points and the intermediate lines. The use of the word "imaginary" in connection with the statement of the problem will henceforth be discontinued, since it has been clearly shown that all surfaces, as well as other geometrical elements, depend for their existence on the imaginative feature referred to in previous articles. It will be understood, therefore, when any geometrical element is mentioned, that the practical feature is to be employed—the imaginative, of course, being implied.

---

PROBLEM 5.

**47. To project three views of an octagonal surface, representing it in a horizontal position.**

The three views consist of a plan, front, and side elevation. A perspective view of the surface in the required position is shown in Fig. 14.

EXPLANATION.—All lines used to define this surface in the plan are at right angles to the vertical lines of sight; and since the lines will thus be drawn in their full length in that view, the surface will there be shown in its full dimensions.

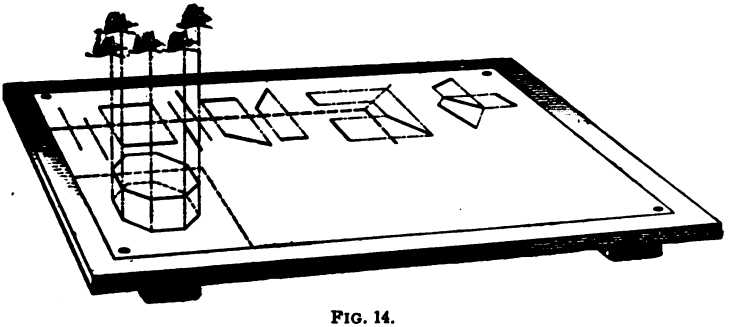

FIG. 14.

This principle also applies to any view of a plane surface in which all its lines are at right angles to the lines of sight. The plan of the surface, then, will be a true octagon, and may be drawn on the plate with lines tangent to a circle 1½ inches in diameter, using the T square and 45° triangle for that purpose.

Digitized by Google

CONSTRUCTION.—Draw the base line for the front elevation 3 inches above the lower border of the drawing, and draw the vertical base line (for the side elevation) $2\frac{3}{4}$ inches from the left-hand border. Describe the circle previously mentioned in such a position that the nearest edges of the octagon will be $\frac{1}{2}$ inch from each base line; the figure may then be completed in the plan. In this and the remaining problems to be drawn on this plate, the right views are to be drawn $\frac{1}{2}$ inch from the base line in all cases. In both elevations, the lines of sight in crossing the surface pass also through the points in that portion of the surface farthest from the observer; and as the eye of the observer travels from points opposite to *M* and *N*, Fig. 15, in tracing the front elevation, the foot of every line of sight would be projected on a single line on **V P**. The elevation of the surface, therefore, is represented on the drawing by the single straight line *M N*, Fig. 15. Project the front and the side elevations in their proper places, completing the problem.

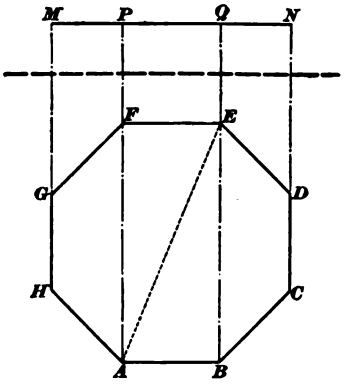

FIG. 15.

NOTE.—The single line that constitutes each elevation of this problem represents the eight lines of the octagonal surface shown on the plan. This is shown in Fig. 15, which is a copy of the plan and front elevation on the plate, lettered for convenience of reference. Two of the lines in the plan, *A B* and *F E*, Fig. 15, are shown in their full length by that portion of the line *M N* included between the points *P* and *Q*; since *F E* is directly in line with *A B* in the elevation, as already explained, it is shown by the same line *P Q* used to define *A B*. The line *H A* is shown foreshortened at *M P*; and, as *G F* is directly behind *H A*, *M P* represents *G F* also; *Q N* bears the same relation to *B C* and *E D*. The line *G H* is represented in the elevation by the point *M*; *N*, in like manner, represents *D C*. Thus, the line *M N* represents a certain view of the eight lines *A B*, *B C*, etc. to *H A*, and also a view of the surface defined by those lines.

The above is very important, and should be carefully read, as it shows the application of principles to Problem 5.

Digitized by Google

PROBLEM 6.

**48. To project the views of an octagonal surface that is in a rightly inclined position.**

NOTE.—No perspective figure is shown for this problem, and the projections will be made on the plate from the following directions. The same figure is used for this problem as for Problem 5. These drawings are really a continuation of that problem; and since a full view of the surface is shown in the plan of Problem 5, projectors will be drawn from that view, in order to define the plan of this problem.

CONSTRUCTION.—Draw the horizontal base line in the next space on the drawing, and at the same distance from the lower edge as the corresponding base line was drawn in the space for Problem 5; draw the vertical base line $1\frac{3}{4}$ inches from the left side of the space.

The front elevation of this problem will first be drawn: Draw a line inclined to the horizontal base line at an angle of 60°, and equal in length to the line shown in the front elevation of Problem 5; the lower end of this line should be $\frac{1}{2}$ inch above the base line, as previously explained. It should be drawn in such a position on the plate that vertical projectors from the ends of the line will pass through the central portion of the horizontal base line. Mark the position of the points indicated by the projectors, as at *M*, *P*, *Q*, and *N*, Fig. 15, and from these points draw four vertical projectors to the plan. Intersect these with horizontal projectors drawn from the plan in Problem 5; draw the connecting lines between corresponding points thus projected; this produces a figure that is the plan of the octagonal surface in the rightly inclined position indicated by the front elevation.

Project the side elevation by the use of secondary projectors, as previously explained. Reference to the copy of this plate will be of assistance to the student during the projection of these views. The completed drawings are there shown, and the method of projecting between different views is indicated by projectors partially extended toward the left of the plan of this problem.

**49. Basis of Projection.**—The plan and side elevation of this surface are foreshortened views. There are, however,

Digitized by Google

two lines in each view shown in their true length; this may be proved by a comparison of the figures with the plan of Problem 5; the other lines in each case are foreshortened.

It does not necessarily follow, however, that any of the lines in a rightly inclined view are shown in their true length. Had the angle of inclination been along the line *A E*, Fig. 15, every line would have been foreshortened; again, in the case of surfaces having curved or irregular outlines, the least angle of inclination in any direction would preclude the possibility of representing, in a foreshortened view, any portion of the outline in its true length.

It will thus be seen that the point is the only geometrical element not subject to change, or variation, in any view. It may therefore be relied on as a basis of projection. The outline of any surface in the different views is determined by *first fixing the location of points at the extremities of the boundary lines of such surface*, afterwards drawing the connecting lines, as in this problem.

---

PROBLEM 7.

**50. To project a full view of a surface from a given plan and elevation showing that surface in a rightly inclined position.**

A full view of any surface may be projected by assuming a view to be taken at right angles to a line in which the entire surface is represented, for in such a view the lines of sight are at right angles to the outlines of the surface.

CONSTRUCTION.—In the next adjoining space to the right on the plate, copy the plan and the front elevation of Problem 6, placing the projections so that they will occupy the same relative position in the space. To obtain a full view of the surface in this problem, a view must now be assumed at right angles to the line in the elevation; in other words, the elevation must be considered as a plan and a new front elevation projected therefrom. The plan copied from

Digitized by Google

Problem 6 is used as a base plan, secondary projectors being drawn from thence in the manner shown on the plate and described in the following article. The projectors in this case are drawn by the arc method, sometimes more conveniently employed than the angular method previously described.

**51. Arc Method of Drawing Secondary Projectors.** Draw a base line, for the projection of the full view, from the intersection of the base lines previously drawn and parallel to the line that represents the surface of the octagon, as *A B* (see plate). At the point of intersection of the base lines (*B*), erect a perpendicular to the oblique base line *A B*, as *B C*, producing it indefinitely toward the right. The positions of all points in the plan are now to be located on this line in the same relative position as they would occupy if projected horizontally to the vertical base line in the drawing. The points are accordingly projected horizontally to the vertical base line *B D*; thence, by using the compasses and describing arcs from a center *B*, located at the intersection of the base lines, they are projected to the line *B C*. The projectors are then continued beyond *B C*, but parallel to *A B*; they are there intersected by primary projectors drawn from corresponding points in the elevation, as shown. Locate the various positions of the corresponding points at the intersections of these projectors, and produce the full view of the octagon by drawing the connecting lines.

It will thus be seen that the drawing of secondary projectors by this method involves *first*, projection to the nearest base line; *second*, the describing of arcs from the center shown; and *third*, the continuation of the projectors parallel to the base line of the desired view. If the drawing has been carefully made, it will be found that the surface thus defined is an exact counterpart of the plan in Problem 5, and that the full view projected in this problem is in the same relation to the elevation as the plan in Problem 5 is to the elevation of that problem.

Digitized by Google

**52. Views Necessary for the Projection of the Full View.**—When it is desired to project a full view of any surface that is represented in a drawing in an inclined position, it is necessary to have one view that will show all the points of that surface as contained in one line. A projection must also be drawn at right angles to that view, in order that such dimensions of the surface as are at right angles to those in the first view may be shown in their true length.

**53. Full Views Sometimes Obtained Without Projection Methods.**—A comparison of the views in the projections of the last problem will prove that the vertical primary projectors included within the surface of the octagon shown in the plan are of the same length as the secondary projectors in the view last projected. This knowledge may be used to some advantage in producing a full view without using all the projectors employed in this problem.

Thus, draw a horizontal center line through the plan, as $E\,F$ (see drawing on the plate for Problem 7), and draw primary projectors from the elevation to the full view in the regular way; at a convenient distance, draw a line at right angles to, and crossing, these projectors, as $G\,H$. This line will be the center line for the full view, the points of which may then be located with the dividers in the following manner: Set the dividers to the length $a\,e$ in the plan, and set off a corresponding distance at $a'\,e'$ in the full view; in like manner make $b'\,f'$ equal to $b\,f$, etc., as shown on the plate. Complete the outline of the full view, then, by drawing connecting lines as heretofore.

This method is generally followed in pattern drafting, since it requires less time than to draw full projections as in the construction of the problem, and there is less liability of error.

**54.** If the student that does not clearly understand the principles by which these projections are made will cut a piece of cardboard to the same size and shape as the plan of Problem 5, and hold it in such positions that the foot

Digitized by Google

of the lines of sight falls on the points designated on the drawings for the different views, he will at once see the correct position of the surface as represented in each view.

**55. Surfaces Bounded by Curved Lines.**—Surfaces that are defined by curved lines do not present any points from which to make projections. In making such projections, the same principles are employed, however; but it is first necessary to establish a number of points at various positions on the curved lines. The points thus established are then projected in the same way as in the foregoing problems. When, for purposes of projection, points are located on the outline of a curved surface in any view, it should be observed that they are so placed that, when the points thus located are projected to a line that represents an edge view of that surface, each end of that line is defined by the projection of a point.

---

PROBLEM 8.

**56. To project views of a plane surface defined by a curved line, the surface being in a rightly inclined position; also, to project a point located on that surface.**

NOTE.—Before making the projections of this problem, the lines to remain on the drawing for Problem 5 should be inked in, and, to avoid confusion, all other lines not to be inked in on that figure should be erased; the circle drawn for Problem 5 may then be redrawn for this problem.

CONSTRUCTION.—The surface for the projections of this problem is that of the circle to which the sides of the octagon in Problem 5 are tangent. After describing the circle, the next step is to locate points on its circumference. Do this by first drawing a vertical and a horizontal diameter, and then drawing, with the 45° triangle, two other diameters at right angles to each other, thus locating eight points at equal distances on the circumference. Those points indicated by the horizontal diameter will, when projected to the elevation, define the ends of the line in that view.



Digitized by Google

Also, locate a point at the center of the circle. The plan and elevation of the surface thus projected is shown in Fig. 16, the points being denoted by numerals. Project these points to the elevation of Problem 5, using lines easily erased, since they are not to appear in that problem when the plate is finished. In the last space on the plate, draw horizontal and vertical base lines in the same corresponding position as in the space for Problem 6. The line that represents the front elevation of the circular plane surface is then drawn in the same position as in the elevation in Problem 6; with the dividers, locate points thereon in the same position as the points projected from the circle to the front elevation in Problem 5, as shown in Fig. 16. Project these points vertically to the plan, and intersect these projectors with horizontal projectors drawn from the circle in Problem 5.

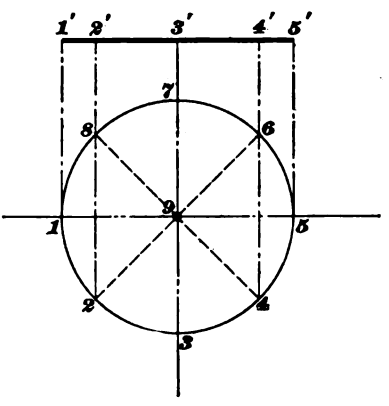

FIG. 16.

When projecting points across a drawing—as from the space occupied by Problem 5 to the drawing for this problem—it is not necessary to draw lines the entire distance. By carefully placing the edge of the T square on each point in turn, corresponding lines may be drawn across the plan in this problem. This saves erasing unnecessary lines, but care must be taken, when making projections in this way, to observe that points thus located are at the intersections of projectors drawn from points in corresponding positions in each of the views. Find the location of each point thus projected, and through these points trace the curve that represents the foreshortened view of the circle, using the irregular curve for this purpose. Thus a plan and a front elevation of the circular plane surface is drawn, in which the surface is represented in a rightly inclined position.

Digitized by Google

Project the side elevation by the angular method of secondary projectors, as previously explained, and designate the point in both views by a small dot at the center of the surface. Finally project the full view by the arc method, as in Problem 7. In this problem, a good test of accuracy is afforded, if, after the nine points have been projected to the full view, a circle with a radius of $\frac{3}{4}$ inch, described from the central point, passes through the other eight points.

**57. Importance of Accuracy.**—Next to a knowledge of the principles of projection, neatness and accuracy are the prime requisites in a drawing. The student should carefully observe that, when the points determined by the intersection of lines are used as centers for arcs or circles, the needle point of the compasses should be placed exactly on that position; again, drawing three or more lines that shall intersect at the same point is very commonly required in projection drawing and in pattern drafting; this is not an easy thing to do accurately unless carefully practiced by the student. It is needless to state that unless the work is accurately done it is of no value.

When putting in the figures for the dimensions on drawings, care should be observed that they are placed on those views in which the lines and surfaces are shown in their true length. Do not designate a foreshortened view of a line or surface by a dimension figure, when another view is given in which the true length is shown. Again, do not repeat the same dimension on different views of the same drawing; thus, in Problem 2, Case I, the length of the line is given as 2 inches in the plan, and it is obviously unnecessary to give the same dimension in the front elevation.

The student may ink in all the problems on the plates, but the letters used to describe the different positions and lines are not placed on the drawing. The date, name, and class letter and number are inscribed as in the plates of *Geometrical Drawing*.

Digitized by Google

### DRAWING PLATE, TITLE: PROJECTIONS II.

**58.** The problems for this and the succeeding plates should be practiced on other paper and then copied on the drawing that is to be sent in for correction. The student can thus judge better as to the relative position the figures should occupy and the completed plates will present a neat appearance. In making the projections on this and the succeeding plates, the views may be assumed to be $\frac{1}{4}$ inch from their respective base lines, as this will enable the projections to be kept in closer proximity. The base lines are not to be inked in on this or the following plates. Divide this plate by a central horizontal line; the part of the drawing above this line is divided into three, and the part below the line into four, equal spaces.

---

### PROBLEM 9.

**59. To project a side elevation and a full view of a rightly inclined plane surface defined by an irregular outline.**

This is a problem in which the student has an opportunity to use, in a practical way, the knowledge of projection thus far gained. The surface to be projected is shown in a rightly inclined position in Fig. 17, which is a foreshortened view of the surface. This figure is to be copied, in the size indicated by the dimension figures, into such a position in the upper left-hand space on the drawing that the projections when completed will occupy about the center of the space.

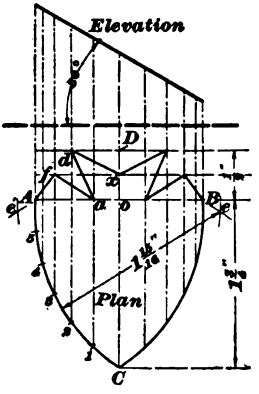


FIG. 17.

CONSTRUCTION.—First, draw the horizontal line $A\,B$ $1\frac{3}{4}$ inches long and bisect it at $o$ by the vertical line $C\,D$. Make $o\,D$ $\frac{1}{2}$ inch long and bisect it at $x$, as shown, making $o\,C$ $1\frac{3}{4}$ inches

Digitized by Google

Digitized by Google

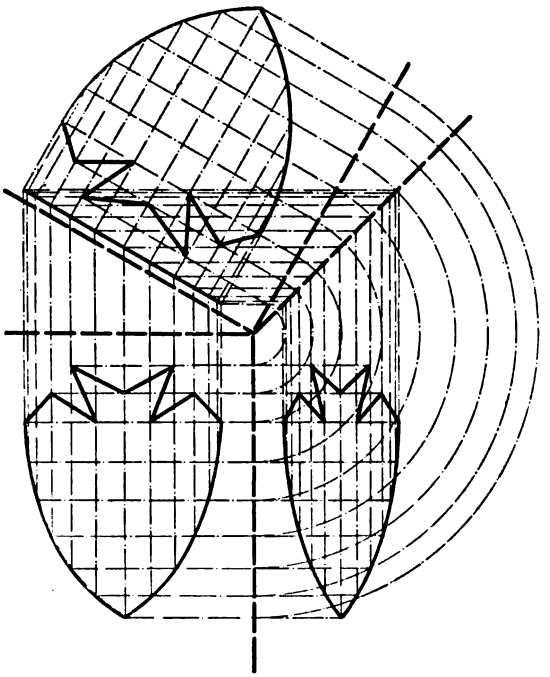

PROBLEM 9.

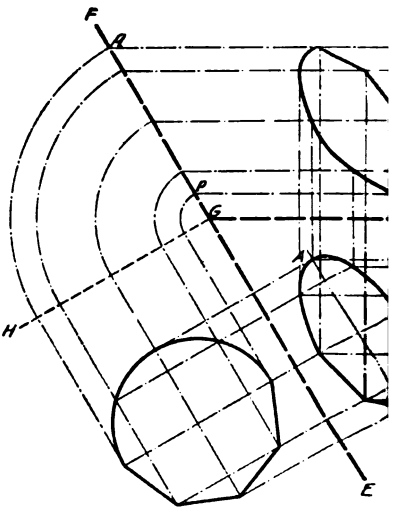


PROB

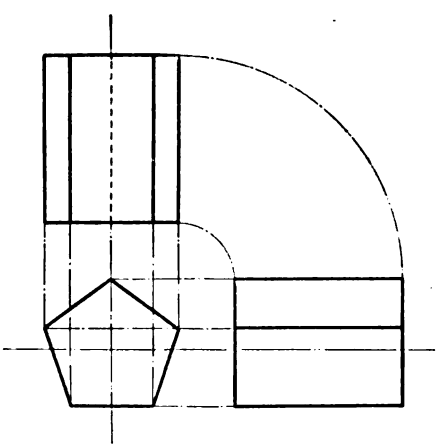

PROBLEM 12.
Case 1.

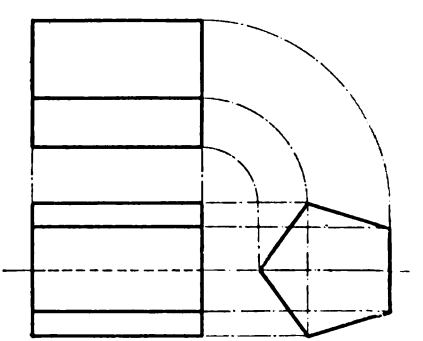

PROBLEM 12.
Case 2.



Copyright, 1899, by THE COLL

All rights r

Digitized by Google

# TIONS-II.

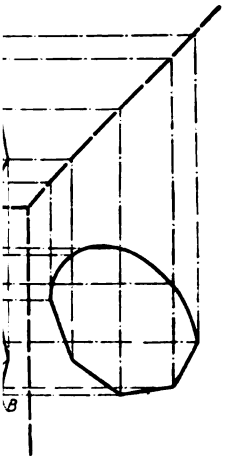


EM 10.

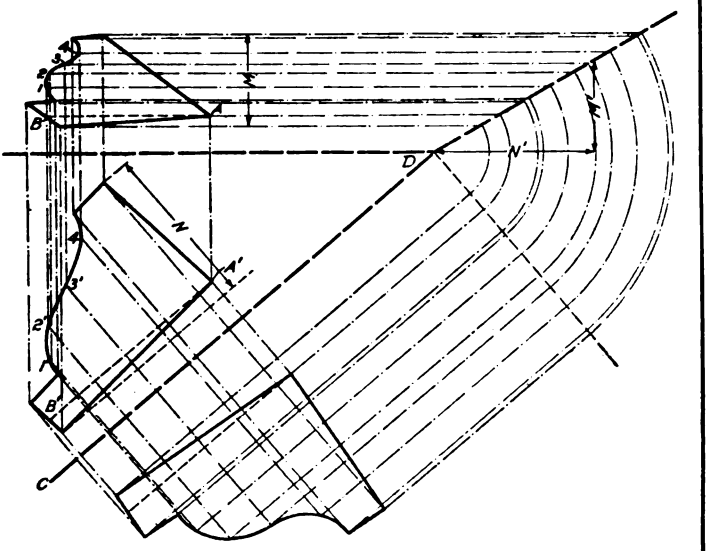


PROBLEM 11.

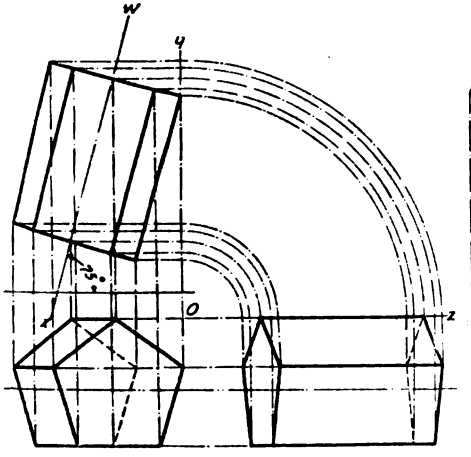


PROBLEM 12.
Case 3.

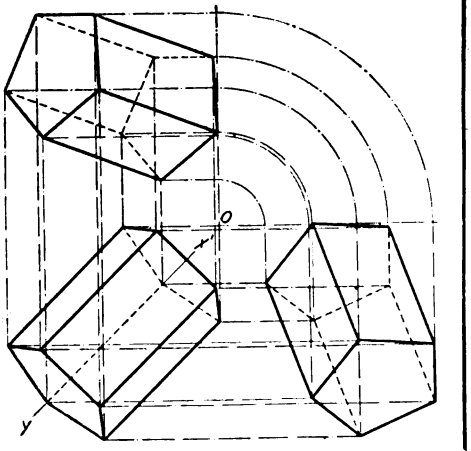


PROBLEM 12.
Case 4.

ERY ENGINEER COMPANY.

served.

JOHN SMITH, CLASS No 4529.

Digitized by Google

Digitized by Google

long. Set the compasses at a radius of $1\frac{5}{8}$ inches, and with $A$ and $C$, respectively, as centers, describe arcs intersecting at $e$; with the same radius and with $B$ and $C$ as centers, describe arcs similarly intersecting at $e'$. From these centers ($e$ and $e'$) describe the arcs $A\,C$ and $B\,C$, thus producing the curved outline of the lower portion of the plan. Next, divide these arcs, by spacing, into six equal parts, thus locating the points *1*, *2*, *3*, *4*, and *5*; from these points draw vertical lines, as shown in Fig. 17. Complete the upper outline of the surface as represented in the figure; thus, locate $a$ at the intersection of the vertical from *1* with a horizontal from $A$; $d$, at the intersection of the vertical from *2* with a horizontal from $D$; $f$, in like manner at the intersection of a vertical from *3* with a horizontal from $x$.

The points at the extremities of these lines and those located on the curved outline are now to be treated as in former problems and the projections made in the usual way.

CAUTION.—When making the projections for this problem, the student must observe the precautions given in regard to the taking of the same corresponding points in each view. Project the side elevation first; it may be desirable for the student to ink in that figure, in order to avoid the confusion arising from a number of lines crossing one another on the drawing. Use the angular method for the secondary projectors in projecting the side elevation and the arc method for the full view. Since it is often necessary, when developing patterns, to draw several views over one another in this way, the student should accustom himself to drawings that have a complicated appearance from this cause, and should learn to follow each set of projectors as readily as though they were in separate drawings. During the construction of this projection, it will be noticed that the base line for the full view, in order to be drawn from the intersection of the other base lines, will fall below the front elevation of the surface. This is unimportant, however, since its purpose is the same, and the result is merely that of a slight appearance of crowding on the drawing.

Digitized by Google

PROBLEM 10.

**60. To project views of a plane surface in an obliquely inclined position.**

EXPLANATION.—A full view of the surface to be projected in this problem is shown in Fig. 18, the dimension figures giving the size in which it is to be drawn by the student. The upper portion of this surface is defined by a semicircle, the lower by one-half of an octagon. The purpose in selecting a surface of this outline is to give the student some practice in the projection of both straight and curved outline surfaces.

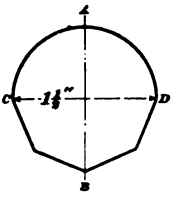

FIG. 18.

It has been shown that, before an inclined view of a surface was projected, a right view—i. e., a right plan and elevation, as in Problem 5—has first been drawn. These views alone are projected in drawings of simple or plain objects, it being obviously unnecessary to show any object in a working drawing in a position not commonly occupied. But, owing to the different shapes of objects, variously outlined surfaces are presented in a diversity of positions, and it is essential that the student should be capable of projecting any surface into any conceivable position, and of drawing a full view from such a projection.

CONSTRUCTION.—The method of drawing oblique views of surfaces is shown in detail at (*a*), (*b*), and (*c*), Fig. 19, the projections at (*c*) being the ones required for the plan and elevation of this problem. Lay a separate piece of paper over the drawing of Problem 9 on the plate, and reproduce thereon the projections shown at (*a*) and (*b*), Fig. 19, in accordance with principles already explained. Next, draw the plan and elevation at (*c*) in their proper places on the plate. The drawing shown at (*a*) may be seen to be similar to that of Problem 5 of the preceding plate; (*b*) is projected directly from (*a*), in the same manner as Problem 6, the angle of inclination being 60°. The plan of this surface in (*b*) is then copied at (*c*) in such a position that the center line *A B* makes an angle of 60° with the base line of **V P**.

Digitized by Google

This is accomplished by first drawing the center line $A' B'$ at the given angle in ($c$), noting thereon the position of the points $w'$, $x'$, and $y'$; draw perpendiculars through these points, and make $w' a'$ in ($c$) equal to $w a$ in ($b$), $x' D'$ equal

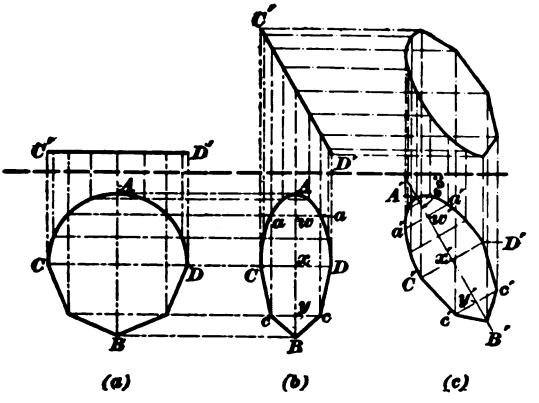


FIG. 19.

to $x D$, etc. The outline of the plan at ($c$), therefore, is exactly the same as it is shown in ($b$), the only difference between the two views being the fact that the line $A' B'$ in ($c$) is inclined to **VP**, while in ($b$) it is perpendicular to that plane.

Let us consider what changes have here been represented. Cut a piece of cardboard to the outline and size shown in Fig. 18, and compare it with the different positions in the drawings just made. It will be seen that the cardboard must be held in a horizontal position to coincide with the drawing at ($a$); to represent the drawing at ($b$), the point $C$ must be raised until the line $C D$ is at the angle of 60° with **HP**. The plan at ($b$) is, therefore, a foreshortened view of the surface, although its elevation may still be represented by the single line $C' D'$. Now turn the cardboard to the position indicated in ($c$), that is, so that the line $A' B'$ makes an angle of 60° with **VP**.

It will be seen that the line $C D$ in its relation to **HP** is not affected by this change, its angle with **HP** remaining as

Digitized by Google

before; *therefore, the vertical distances to be shown in the elevation of* (*c*) *will be the same as in the elevation of* (*b*), and may be projected directly to (*c*) from (*b*), as shown in Fig. 19. Draw horizontal projectors from the elevation at (*b*) to the elevation in (*c*), intersecting them, in the manner shown, by primary projectors drawn vertically upwards from the points in the plan at (*c*). Trace the outline of the surface thus indicated through the intersections of projectors drawn from corresponding points in each view. The projections shown at (*c*) being completed on the plate, the paper on which (*a*) and (*b*) were drawn may now be removed and the side elevation required for the problem projected by the angular method previously described. Three views are thus shown, in all of which the surface is represented as inclined at an oblique angle to the lines of sight; all these views, therefore, are foreshortened. Oblique views may always be drawn in this manner; that is, a right view is first drawn; next, a rightly inclined view is projected, the desired angle being represented in the elevation. The plan thus produced is then redrawn for the oblique view and its elevation projected as in this problem.

**61. Position of Full Views: How Determined.**—To project a full view of this surface it is first necessary to determine whether any of the lines or distances in any of the views are shown in their true length, but without having recourse to the projections made on the separate paper, since projection methods are to be used. This may be done by comparing the relative position of any two points in the outline of the surface, as located in the plan and elevation. If it is found that a line drawn between any two of these points in the elevation will be parallel to the base line (and therefore at right angles to the vertical lines of sight), that line will be shown, of course, in its true length on the plan. Any other lines parallel to it will also be shown in their true length. It is found, on examination, that points in the elevation corresponding to the positions represented by *A* and *B*, Fig. 18, are located on the same horizontal

Digitized by Google

projector; therefore, a line drawn between these points as they are located on the plan will be represented in its true length in that view; and a view projected from these points in the plan by primary projectors drawn at right angles to this line, intersected by secondary projectors from the front elevation (by a modification of the method used in Problem 7), will be a full view of the surface.

Draw the oblique base line in the proper position, i. e., parallel to that line shown in full length in the plan (*A B* on the plate), as above explained, and at such distance away from the plan as directed in the instructions for drawing this plate, producing the line indefinitely toward the upper portion of the drawing, as shown on the plate at *E F*. In this case, the line thus drawn defines the inclination of the surface, since the angle is the same in both plan and elevation, viz., 60°. The full view is projected as follows: Draw the line *G H* at right angles to the base line *E F* and from the intersection of *E F* with the horizontal base line. By the arc method, draw secondary projectors from the elevation, as shown; intersect these projectors by primary projectors drawn from the plan at right angles to *E F*, thus producing the full view of the surface. It will be found that this full view is an exact counterpart of the surface shown in Fig. 18, and should correspond to the preliminary drawing in the plan at (*a*) on the separate paper. Note that the portion of *E F* included between *p* and *q* corresponds in length to that of the rightly inclined front elevation at (*b*), Fig. 19. This may be seen by comparing that portion of the line with the view on the preliminary drawing.*

The student should now be able to recognize any view of a surface in any position; that is, he should be able to tell whether a view represents such a surface in a right position, a rightly inclined position, or an obliquely inclined position; and by the application of the principles illustrated in the foregoing problems and the exercise of a little

* It should be noted that this is the case only when the angle of inclination is the same in both views.

Digitized by Google

judgment, he should be able to project any surface into any desired position. Or, being given a surface in a position indicated by a properly projected plan and elevation, he should be able to produce the full view and designate the angle of inclination.

The following problem will serve as a test of his progress. The principles involved have already been presented, and the method of application will be readily understood. The angle of inclination in the plan is not the same as is shown in the elevation; both angles are to be determined by projection methods.

---

PROBLEM 11.

**62. To project the full view of an irregularly outlined surface obliquely inclined.**

The projections of this problem are to occupy the upper right-hand space of the drawing plate. The plan and front elevation are shown in Fig. 20, and are reproduced full size on the sheet opposite this page.* The outline represented is frequently used as a "stay," or profile, to which moldings are formed in cornice work. Since the view shown is known to be obliquely inclined, its dimensions are foreshortened, and their true lengths are to be found by projection methods, as follows:

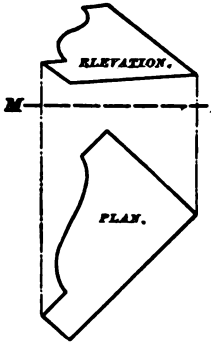

FIG. 20.

CONSTRUCTION.—The student should detach the sheet opposite this page and paste the plan and elevation in such a position in the third space on the plate that the base line $M N$, Fig. 20, will be $2\frac{1}{2}$ inches below the top border line and exactly horizontal. Locate a number of points on the curved outline in the elevation, by equally spacing that

* This sheet is not inserted in the bound volume containing this Paper.

Digitized by Google

portion of the figure with the dividers, as shown at *1*, *2*, *3*, and *4* in the drawing for this problem on the plate, and project these points to the plan. To ascertain the angle of inclination in the plan, draw a horizontal line through the widest portion of the figure in the elevation, locating, if possible, one end of the line at an angle of the surface—as the line *A B*. Project this line to the plan at *A' B'*, as explained in Art. **61**; parallel to this line, erect the oblique base line *C D*.

The angle formed by these lines (*A' B'* and *C D*) with the horizontal base line is the angle of inclination of the surface to **V P**, or that angle shown in the plan. The angle of inclination to **H P**, or that shown in the elevation, is most easily found by constructing a right-angled triangle whose base and altitude are equal to certain distances found in the plan and elevation; that is, the base is equal to the extreme width of the figure in the plan, taken at right angles to the line of inclination in that view (shown by the dimension *N*). The altitude is the vertical height shown in the elevation at *M*. Construct this right-angled triangle on the horizontal base line extended, as shown at *N' M'*, and locate one end of the base at *D*, the intersection of the base lines. Extend the hypotenuse indefinitely toward the right of the drawing. Next, intersect primary projectors drawn from the plan to the oblique view by secondary projectors drawn from the elevation by the arc method, as shown on the plate. The full view of the surface is then traced through the intersections of these projectors, completing the problem.

**63. Projection of Solids.**—We now come to the projection of solids, which, as before noted, are merely various combinations of surfaces. Projections of surfaces in a variety of positions having already been made, we shall encounter no new principles in the projection of solids, the surfaces of which are projected in the same manner as has been shown in preceding problems.

Since lines intersect in a point, so surfaces intersect in a line, and in drawing projections of solids it is necessary only

Digitized by Google

to find the true projections in any view, or set of views, of those lines that represent the correct intersections of the adjacent surfaces; this is a comparatively easy thing for the student to do, if he will use proper care and diligence in the application of the principles of the preceding problems.

**64. Projection of the Cube Illustrated.**—Every solid consists of a number of surfaces, each of which is differently shown when the solid is projected to the various views. This is due to the fact that the observer is assumed to occupy a different position in each view of the solid thus

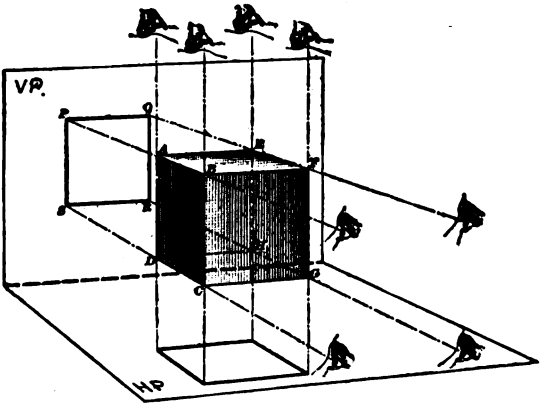


FIG. 21.

projected. In certain positions some solids show one or more of their surfaces directly behind another surface of the same size and shape. This would be the case if the projections of the cube, referred to in Art. **18,** were drawn as shown in Fig. 21. When the cube is in a right position—that is, with two surfaces horizontal, and that surface nearest the observer in a side view in such position that the lines defining that surface will be at right angles to the lines of sight, as indicated in Fig. 21—it is evident that the surface parallel to and behind the front surface will be projected by the same lines of sight as the front surface. Therefore, in such a case, a projection of the front surface

Digitized by Google

of the cube is equivalent to a projection of the entire cube. Each projection of the cube in the plan, front, and side elevations is a square, the sides of which are 1 inch long, while the views are arranged, as shown in Fig. 22, in such a way as to appear related to one another.

**65.** In "reading" the projections shown in Fig. 22, we merely compare the surfaces of the cube as they are shown in the different projections. Thus, the surface *A B C D*, Fig. 21, is represented in the plan of Fig. 22 by the line *A B*, and in the front elevation by the line *B C*, while a full view of that surface is shown in the side elevation; so, in like manner, the position of each surface of the cube may be determined. Note that, in each full view, two surfaces are represented; thus, in the front elevation of Fig. 21, the surfaces *B F G C* and *A E H D* are projected on **V P** as one surface at *P Q R S*. It is thus shown that surfaces in their relation to one another, when combined in one view, as in the projection of a solid, partake of the same principle that has been shown in its application to points and lines, viz., *surfaces whose outlines are contained in the same lines of sight in any view are projected in that view as one surface.*

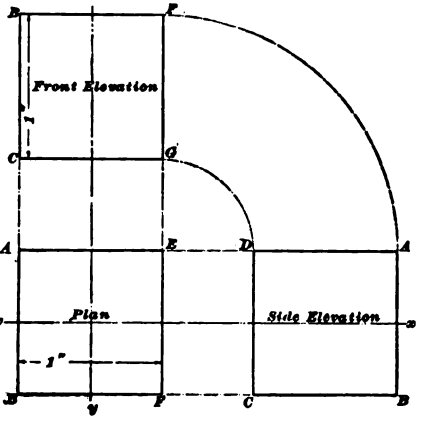

FIG. 22.

Note that in Fig. 22 the secondary projectors are described from *E* as a center, the lines of the cube being used as base lines, as mentioned in Art. **39.** When this short method is adopted in the case of secondary projectors, the center from which they are described must be located at that intersection of the primary projectors

Digitized by Google

nearest the two views between which secondary projectors are drawn. A further illustration of this will be given in connection with a later drawing.

**66. Hidden Surfaces: How Indicated.** — When the form of a solid is such that, in any view, a smaller surface is hidden by a larger, the smaller surface is not shown in that view, although frequently its outline may be defined by dotted lines on the drawing. This applies also to projections in which two or more solids are shown in positions such that some of their surfaces are completely or partially hidden by other surfaces nearer the eye of the observer. Only such surfaces as receive the lines of sight directly from the eye of the observer are shown in a view by full lines, although, as mentioned above, the outline of such other surfaces as it may be desirable to show in a drawing may be indicated by dotted lines.

**67. Facility in Reading Drawings Acquired Only by Practice.**—The reading of working drawings is, therefore, a comparatively easy matter, if the student will resolve each portion of the object represented into its respective surfaces, and look for the various outlines as they are shown in the different projections. If this is found a difficult task, the surfaces may be further resolved into lines and points, whose respective positions may then be located in each view shown. It is not to be expected that the position of every surface in a complicated drawing will be seen by the beginner at a single glance—an expert seldom acquires such proficiency—but, as "practice makes perfect," the student may easily accustom himself, by careful study of the various positions of the surfaces composing the solids that are projected in the following problems, to the more or less complicated projections found in the various mechanical and architectural journals, in shop drawings, or in such other projection drawings as are within his reach.

**68. The Center Line.**—It has been found convenient, when making projections of objects, to make use of a line that is imagined to pass through the central portion of the

Digitized by Google

solid, as it is shown in any plan and elevation. Such a line is called a *center line*, and in many projections it is inked in when the drawing is finished, since it frequently affords a convenient means of indicating certain positions of the figure, besides assisting in the location of the several surfaces of the solid in the different views. This line, however, is central only in its relation to the object of which the drawing is a representation, and not in relation to the planes of projection. This may be better understood by considering the center line as the projection of an imaginary surface (or plane) that passes through the central portion of the figure. It is generally represented in those views only in which that imaginary surface can be shown in one line, or, as we have said before, as if "on edge." Thus, in the right view projected in Fig. 22, the lines $w\,x$ and $y\,z$ are center lines, represented on the drawing by the broken-and-double-dotted lines shown in Fig. 22. The practical use of the center line will be illustrated in the succeeding problems by the projection of solids into various positions.

---

PROBLEM 12.

**69. To draw the projection of a given solid, several positions being indicated.**

The solid for the projections of this problem is shown in perspective in Fig. 23. It is, as the figure shows, a pentagonal prism; that is, a solid whose ends are pentagons and parallel to each other, and whose sides are parallelograms. The dimensions are given in Fig. 23; three projections are to be drawn, each showing the solid in a different position; each projection will be complete in a set of views consisting of a plan and front and side elevations. Each set of projections is to occupy one of the remaining spaces on the plate, the prism being shown in the positions indicated by the following cases:

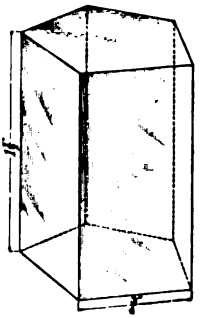

FIG. 23.

Digitized by Google

**Case I.**—*In an upright position, the side nearest the observer being parallel to* **V P**.

The projections showing this position of the prism may be readily drawn by the student from the explanations and instructions already given. The plan, which is a pentagon with ¾-inch sides, should be drawn first, according to instructions given in *Geometrical Drawing*. Draw the center lines as in Fig. 22 and ink them in, completing the drawing as shown on the plate. All lines that represent the intersection of surfaces—i. e., the edges of the prism—and that intercept the lines of sight directly from the eye of the observer are to be represented by full lines on the drawing. All hidden edges are to be shown by dotted lines.

**Case II.**—*In a horizontal position, the upper side being parallel to* **H P**, *and the ends of the prism parallel to* **V P** *in the side elevation.*

In this case, which differs from Case I only in the position of the prism, the side elevation should be drawn first. It may here be mentioned that, in drawing different views of objects in right positions, the question as to which view is drawn first is merely a matter of convenience, depending on the form of the object represented. Thus, in Case I, the plan is drawn first; in this instance it is, however, more convenient to draw the side elevation first. In this drawing it is only in the plan and the side elevation that the center line can be shown, since an edge view of the plane represented would not be given in the front elevation.

**Case III.**—*In a rightly inclined position, the angle of inclination of the center line (and consequently of the prism) to* **H P** *being 75°.*

EXPLANATION.—The sides of the prism are in the same relative position to **V P** in the front elevation as in Case I. (See the plate.) The projection of solids to inclined positions is accomplished in the same manner as the projection of surfaces to similar positions in preceding problems. Practical use may be made of the center line in this drawing; this line may be shown in the front elevation, but cannot

Digitized by Google

be continued to the plan from that view, since it is clear that its true position may not be shown there in one line.

CONSTRUCTION.—First draw the line $w\ x$ in that part of the space devoted to the front elevation, and at an angle of 75° to the base line. The line $w\ x$ is the center line of the front elevation. Next, copy the front elevation of Case I in the same relative position on this line, thus producing the rightly inclined front elevation. Draw primary projectors vertically downwards from all points of this front elevation, and intersect them with horizontal primary projectors drawn from the plan of Case I, in the same manner as the plan of Problem 6 on the preceding plate was produced. Next, draw the outline of the plan by connecting the intersections of projectors that have been drawn from corresponding points in each of the two views. Project the side elevation by means of secondary projectors described from the intersection of the upper and right-hand primary projectors, that is, at $O$ on the plate (see Art. **65**). When drawing secondary projectors for solids whose surfaces do not extend to the outer primary projectors in the adjacent views, note that the primary projector must be produced as at $O\ y$ and $O\ z$.

**Case IV.**—*In an obliquely inclined position, with the center line at an angle of 45° to* **V P** *and 15° to* **H P**, *the upper side being in such a position that a full view will be shown of its upper and lower edges.*

EXPLANATION.—As in Problem 10, where a surface was projected to an obliquely inclined position, so in this problem some preliminary work must be done on another piece of paper. These preliminary projections are shown in Fig. 24, of which (*a*) is the right plan and elevation and (*b*) is the rightly inclined drawing.

CONSTRUCTION.—On a separate piece of paper, construct the projections shown at (*a*), Fig. 24; copy the elevation produced at (*a*) in such a position at (*b*) that the angle of the center line $w\ x$ is 15° to **H P**, as required by the conditions of the problem. Next, project the plan in (*b*) from the plan of (*a*), in connection with the elevation of (*b*), as



Digitized by Google

indicated by the primary projectors drawn from these views. Redraw the plan of (*b*) at (*c*), and give its center line *y z*, the required angle of 45° to **V P**. Next, produce the elevation in (*c*) by drawing primary projectors from the elevation in (*b*) and intersecting them by primary projectors drawn from corresponding points in the plan in (*c*). These operations are precisely similar to those used in producing the obliquely inclined views of the surface in Problem 10; and if the extra piece of paper is laid over the drawing in such a manner as to leave the lower right-hand space exposed, the drawings shown in Fig. 24 at (*c*) may be projected directly

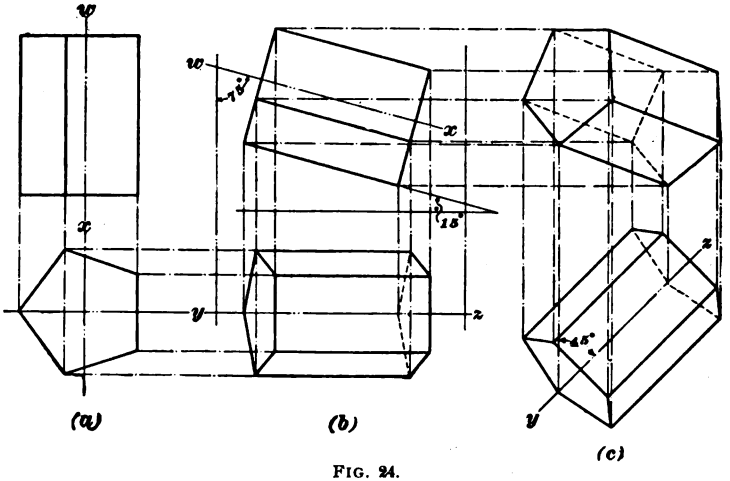


FIG. 24.

to their proper position, thus producing the plan and front elevation required. The side elevation is then projected by means of secondary projectors described from the center *O*, as shown on the plate. It is thus shown that oblique views of solids are projected by the same methods as those used in the case of surfaces.

NOTE.—The appearance of this plate will be improved if the base line of the front elevation of this case is placed ⅛ inch higher than in the preceding cases.

**70. The Axial Line.**—In views such as are projected in this drawing—i. e., obliquely inclined views—the center line, as the representation of the central plane of the figure, can be

Digitized by Google

Digitized by Google

LIBRARY
OF THE
UNIVERSITY
OF
CALIFORNIA

Digitized by Google

shown only in the plan; that is, in the position of the solid shown in this case. The position of the solid might be such that the center line would be shown in one of the elevations, or possibly not in any right view. However, it is sometimes represented in drawings merely as a central line, and not as the representation of a central plane; it may, in such cases, be projected to the other views by means of points located at convenient distances on the line. It is then called an *axial line*, or *line of axis*, and represents the position of the axis of the solid. It is not projected in the cases of the preceding problem, since the figure is not of such a form as to demand the location of an axial line. The axial line is similar in its use to the center line and is represented on drawings by the same kind of a broken-and-dotted line.

In order to avoid confusion, the center and axial lines are usually indicated by small lettering placed conveniently near one end of the lines; thus, "center line" or "axial line."

---

### DRAWING PLATE, TITLE: PROJECTION III.

**71.** Three problems are to be drawn on this plate, each of which will require two sets of projections. Like the projections of Problem 12, they consist of a plan and front and side elevations. Each set of projections occupies one space on the drawing, and the plate is divided into six equal spaces by a single horizontal and two vertical lines. The different cases of each problem are drawn in the same vertical division; thus, Case I of Problem 13 occupies the upper left-hand space and Case II of the same problem is directly under it. Cases I and II of the other two problems on the plate are to be placed in the same way in the remaining spaces.

---

#### PROBLEM 13.

**72. To draw the projections of a cylinder.**

The method of projection used in the case of surfaces having curved outlines has been shown in a preceding

Digitized by Google

problem. Two such surfaces are presented in the ends of the cylinder shown in perspective in Fig. 25; and the figure also gives the dimensions of the solid as it is to be drawn on the plate. Since, with the exception of those at the intersection of the ends, there are no edges formed by the curved sides of the cylinder, there will be no full lines on the drawing except those required to show the ends in their different positions and the outline of the sides. A front elevation of the cylinder in the right position indicated by Fig. 25 is therefore a parallelogram, the length of whose horizontal sides is equal to the diameter of the circular surfaces at the ends of the cylinder—the vertical sides equal in length to the height of the cylinder. Its entire dimensions and its form are indicated in a plan and front elevation, and there is no need of making any further drawings to enable the mechanic to understand the shape of the solid thus represented.

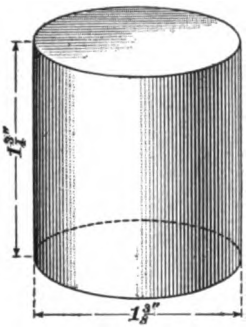

FIG. 25.

**Case I.**—*When the cylinder is rightly inclined.*

EXPLANATION.—In this drawing the cylinder is inclined at an angle of 60° to **H P**. Rightly inclined views of solids are often drawn by a method somewhat shorter than that shown in preceding problems. By this method, temporary views are drawn in convenient positions on the paper and rightly inclined views are projected, as shown in this case. Less space is required for the drawing and a saving of time is effected; the principles involved, as will be seen from the following construction, are identical with those of the preceding problem.

CONSTRUCTION.—First draw the center line in the elevation at the given angle—as $A\,B$ in the drawing on the plate. Describe the circle shown at ($m$), which represents a full view of the end of the cylinder; next, draw the front elevation $C\,D\,E\,F$ on the center line $A\,B$ according to the given

Digitized by Google

dimensions. Describe a circle similar to (*m*) at (*n*); this is a temporary view of the end of the cylinder and corresponds to the plan of the prism at (*a*), Fig. 24. Locate a convenient number of points at equal distances on the outline of each full view thus drawn at (*m*) and (*n*). Project the points of (*m*) to the elevation *C D E F*, and thence draw primary projectors vertically downwards; intersect these primary projectors by other primary projectors drawn horizontally from similar points located on the outline of the full view at (*n*). Trace the outline of the plan thus produced through points of intersection corresponding to those on the full views. The temporary full views (*m*) and (*n*) may then be erased from the plate. Project the side elevation by means of secondary projectors described by the arc method, thus completing the drawing.

**Case II.**—*When the cylinder is obliquely inclined.*

EXPLANATION.—The method of projecting the drawings required for this case is similar to that already given for oblique views of surfaces and solids, and has been fully explained in Art. **60**, and also in connection with Case IV of Problem 12. A right view is first drawn [as the elevation and full view (*m*) of the preceding case]; next, a rightly inclined view. The rightly inclined plan thus drawn is then recopied at the given angle, thus producing the plan of the oblique view; from this plan, in connection with the rightly inclined elevation, the obliquely inclined elevation is projected. The rightly inclined plan and elevation having been drawn in Case I of this problem, the plan there shown may be redrawn for the plan of this case.

CONSTRUCTION.—On a separate piece of paper, reproduce the plan and front elevation of Case I, and fasten this paper by thumbtacks to the drawing board, toward the left of the space used for this case. Next, redraw the plan of Case I in its proper place on the plate for this case, and in such a position that the line *G H* of Case I forms an angle of 60° with the base line of the front elevation, as shown at *G' H'* on the plate. Then produce the front elevation by drawing

Digitized by Google

primary projectors upwards from the plan and intersecting them by similar projectors drawn horizontally from the rightly inclined elevation on the attached sheet, which may then be removed. Trace curves through the points thus projected and draw the tangential lines, as previously described and as shown at $C'\ D'\ F'\ E'$ on the plate. Project the side elevation as in preceding problems, taking special care to project from similar points in each view.

---

PROBLEM 14.

**73. To draw the projections of a hexagonal pyramid.**

A *pyramid* is a solid whose base is a polygon and whose sides are triangles uniting at a common point called the *vertex*. The pyramid for the projections of this problem is shown in Fig. 26, where its dimensions are clearly indicated. Since these drawings are very easy and are constructed in a manner similar to those of preceding problems, definite instructions are omitted, and the student is expected to be able to complete the drawings by the aid of the brief explanations that follow.

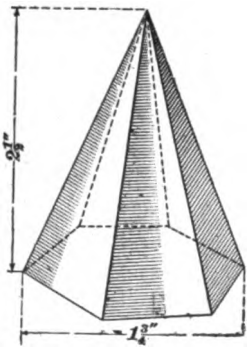

FIG. 26.

**Case I.**—*When the pyramid is in a right position.*

EXPLANATION.—The plan of this projection is most conveniently drawn first, a circle 1¾ inches in diameter being described from $O$ as a center, as shown on the plate. The edges of the pyramid are then drawn: a horizontal diameter, and two diameters at angles of 60° with the first, represent the upright edges; chords of the arcs thus designated are then drawn, and the plan of the pyramid is complete. Next draw the center lines $A\ B$ and $C\ D$; set off the height of the pyramid on the line $A\ B$ and complete the front elevation by the aid of primary projectors, as shown on the

Digitized by Google

plate, the side elevation being projected as in former problems.

**Case II.**—*When the pyramid is in an obliquely inclined position.*

EXPLANATION.—The angles of inclination in the projections of this case are 60° to **H P** and 45° to **V P**. Preliminary drawings are required on separate paper, as shown in Fig. 27,

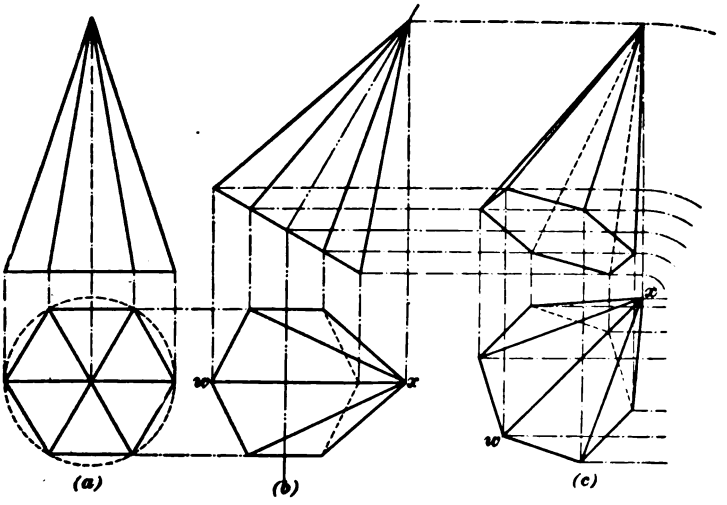


FIG. 27.

first, as at (*a*), showing a right view of the pyramid; and second, as at (*b*), showing a rightly inclined view, the angle of inclination (of the center line) being 60° to **H P**. The plan produced at (*b*) is then copied on the plate in such a position that its axial line will make the required angle, viz., 45° to **V P**, as shown by the line *w x* at (*c*), Fig. 27. The front elevation is then projected as in Case II of the preceding problem, that is, by vertical primary projectors drawn from the plan in (*c*), intersected by horizontal primary projectors drawn from the elevation in (*b*). The projection of the side elevation by the arc method of secondary projectors is also similar to the preceding projections, as will be seen from an inspection of the plate.

Digitized by Google

PROBLEM 15.

**74. To draw the projections of a cone.**

The *cone* is a solid that may be produced by the revolution of a right-angled triangle around one of its sides as an axis. Its base, therefore, is a circle, and its curved surface tapers uniformly toward a point at the top called the vertex, or *apex*. Like the cylinder, its entire form and dimensions are presented in a plan and a single elevation showing a right view of the cone. The cone for the projections of this problem is shown in perspective in Fig. 28, which gives the dimensions that the cone is to present on the plate. The methods used are precisely similar to those used in the case of the hexagonal pyramid in the preceding problem.

**Case I.**—*In a rightly inclined position.*

EXPLANATION.—In order to produce the rightly inclined front elevation, a construction similar to that used in Case I of Problem 13 is here used. The drawing differs from that projection only in the form of the solid. The angle of inclination in this case is 50° to **H P**.

CONSTRUCTION.—Draw the center line *A B* (see the plate) at the given angle, that is, 50° to the horizontal. Next, construct the triangle representing the elevation of the cone and describe the circle at (*m*)—a temporary full view of the base. Describe a similar circle at (*n*), also a full view of the base, and locate a convenient number of points on the outline of each full view—in this case eight—as shown at *a*, *b*, *c*, etc. on the plate. Project the rightly inclined plan in a manner precisely similar to that used in the view of the cylinder in Case I of Problem 13. Erase the temporary views (*m*) and (*n*), and project the side elevation as in preceding projections.

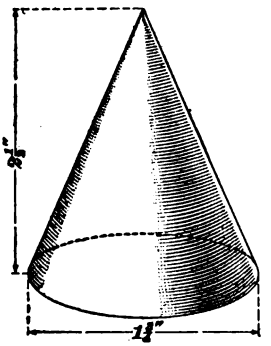

FIG. 28.

**Case II.**—*In an obliquely inclined position.*

EXPLANATION.—The angle of inclination to **H P** is the same

Digitized by Google

as in the drawing last made, and the plan of that projection may be recopied for the plan of this case, but it is to be drawn on the plate in such a position that the center line $w\,x$ will make an angle of 45° to **V P**. The plan and front elevation of the preceding case must be redrawn on separate paper and temporarily fastened over the drawing toward the left of the space required for this case, in order that the projection of the front elevation may be drawn. As this process is similar to that used in preceding constructions, no further explanation will be given. Complete the projections in the plan, front, and side elevations as shown on the plate.

NOTE.—When inclined views are drawn of solids having curved surfaces (as the cylinder and the cone), the circular ends should first be projected. The outline of the curved surface is then represented as tangent to the base, or bases, of the solid, and without regard to the intersection of such outline with any given point on the base outline.

**75. Self-Reliance.**—The student that has intelligently completed the projections of the foregoing problems and has made frequent use of the imaginative feature of this subject, as previously explained and directed, should now possess a very complete knowledge of the methods of projection used in representing plain solids in various positions. The projection of irregularly outlined figures has not been presented, since the methods are identical with those already shown. The student should acquire a degree of self-reliance in this work; for, if he is to depend on having the projection of every conceivable form described for him, the principles governing those projections will become a secondary matter, whereas the pattern draftsman requires, above all else, the faculty of recognizing the principles by which to define and project the various forms occurring in the course of his work.

NOTE.—The student should understand that the percentage of marking adopted for these plates is based on the degree of accuracy in which the projections are drawn to the angles of inclination, as well as on the quality of neatness attained in the finish of the drawings.

Digitized by Google

### DRAWING PLATE, TITLE: SECTIONS I.

**76. Use of Section Drawings.**—A section drawing, as previously explained, is a projection of a portion of a solid, in a view where the solid is intersected by a plane. This plane—sometimes called a *cutting plane*—may pass through the solid in any direction; that portion of the solid between the plane and the observer is assumed to have been removed. Section drawings are useful in many ways, for by such means the construction of interior parts of objects may be shown. It is desirable, in many cases, to show some particular form that a solid of peculiar shape possesses at a place where it cannot be presented in an exterior view, and in such cases, sections are projected. The section is considered simply as a surface that would appear on the cutting plane in any view of the object projected. The outline of this surface, therefore, will depend on the form of the object, the number of surfaces intersected by the plane, and the angle of inclination of the cutting plane.

To project the views of a solid in which a new surface is thus presented, it is necessary to consider the various surfaces that originally composed the solid. The first view drawn is always that in which the cutting plane is represented as *on edge*. The intersections of the original surfaces of the solid with the cutting plane are thus shown; and, by using methods of projection already presented, any view of the section may then be drawn. Those portions of the solid assumed to have been removed are not shown in a section drawing, although their position is sometimes indicated by dotted lines.

**77. Sections of the Sphere.**—The solid that presents the most simple illustrations of sections is the *sphere*, or *globe*. This solid, also called a *ball*, is such as would be generated by the revolution of a circle around its diameter as an axis.

The cylinder, cone, and sphere are sometimes called the "three round bodies," or the *solids of revolution*. It will be

Digitized by Google

Digitized by Google

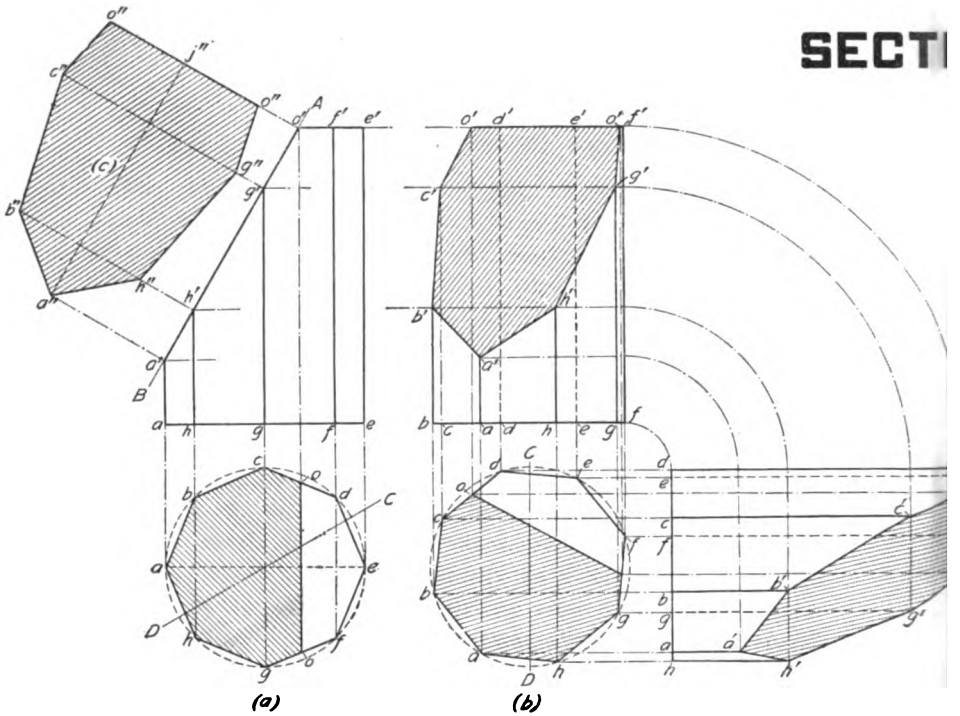


PROBLEM 16.

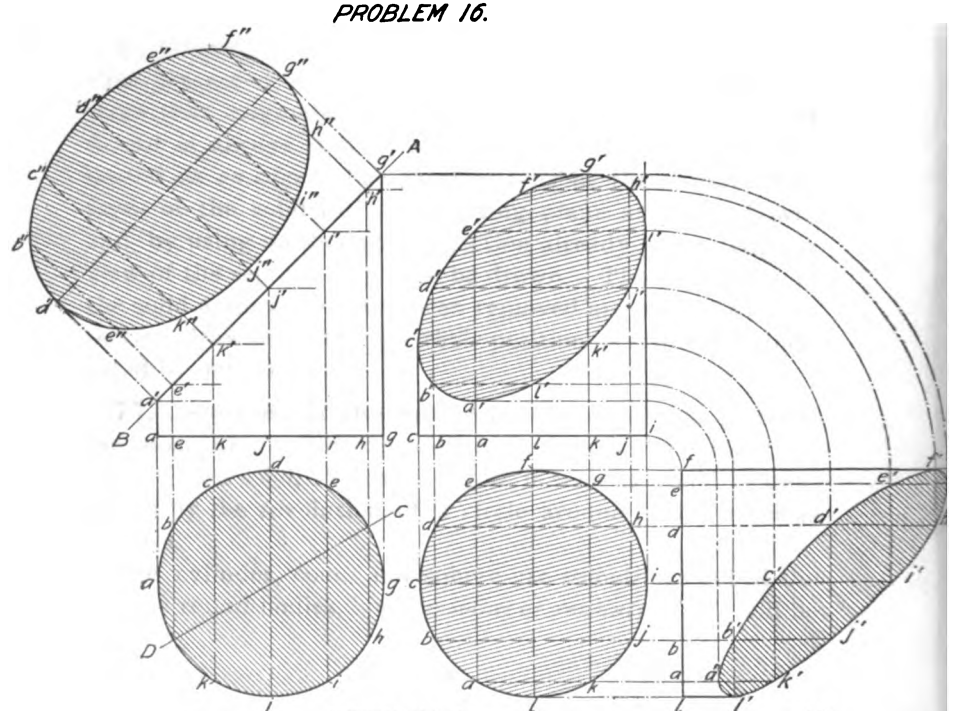


PROBLEM 18.



Copyright, 1899, by THE COL

All rights

Digitized by Google

# DNS-I.

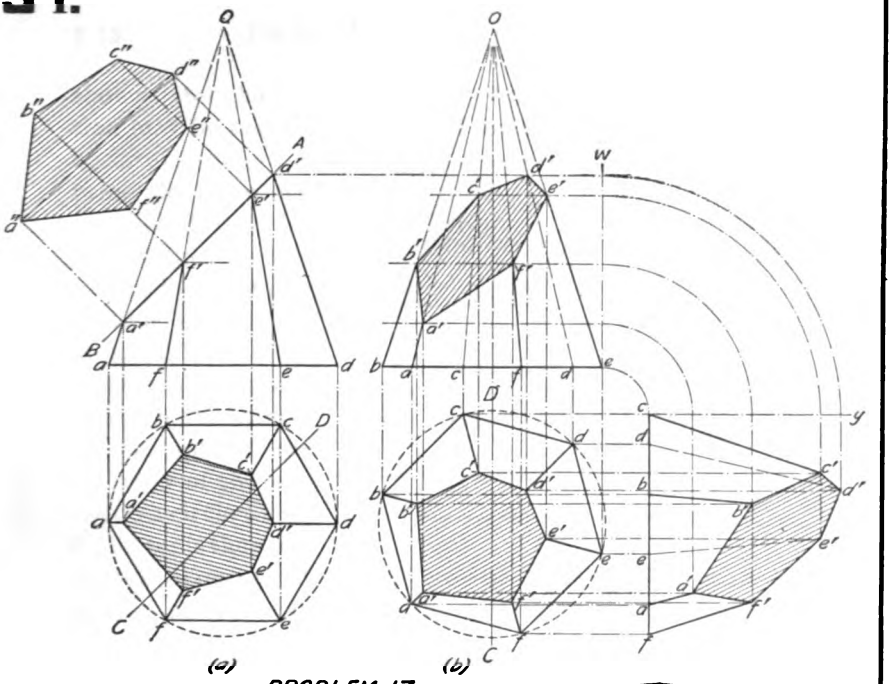


PROBLEM 17.

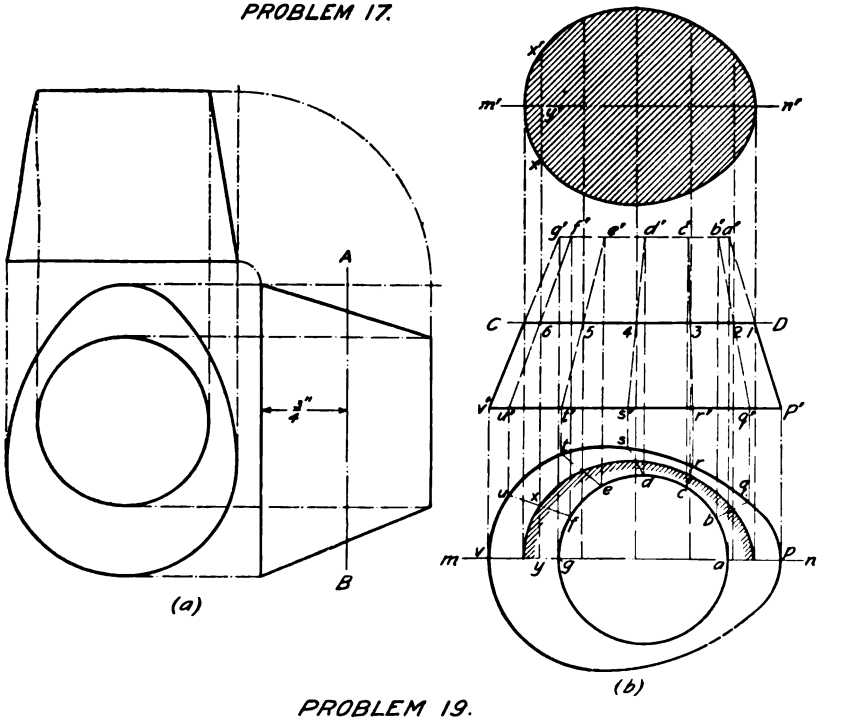


PROBLEM 19.

RY ENGINEER COMPANY.

—

ERVED.

JOHN SMITH, CLASS Nº 4529.

Digitized by Google

Digitized by Google

shown later that their imaginary formation by such revolution may be taken advantage of by practical short methods of projection, the principles of which are based on this knowledge.

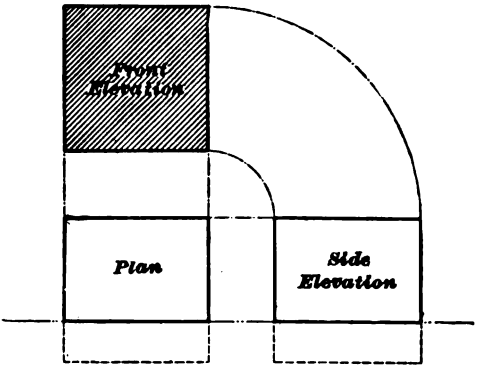


FIG. 29.

A full view of any section of a sphere is a circle. If the cutting plane passes through the center of the sphere, the full view of the section is a circle whose diameter is the same as the diameter of the sphere—or the *great circle* of the sphere, as it is called. If the cutting plane intersects the

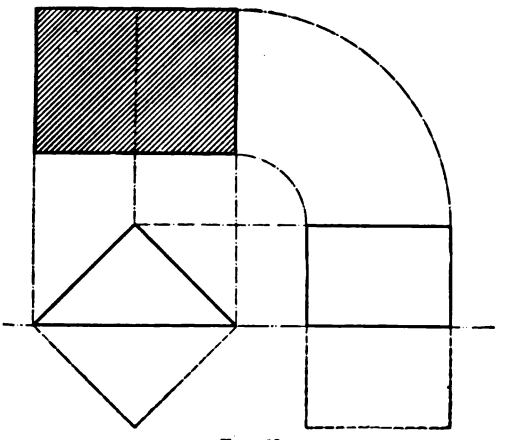

FIG. 30.

sphere in any other way, the section is still a circle, but of smaller diameter, and is measured from a view in which the cutting plane is shown on edge.

**78. Sections of the Cube.**—Fig. 29 is a projection drawing of the cube referred to in former illustrations and shows a vertical section. It will be noticed that the view

Digitized by Google

of the section in the elevation is the same as the view in the front elevation in Fig. 22. This is always the case in sections of regular prisms where the cutting plane is parallel to the ends of the prism. Fig. 30 represents a diagonal section of the cube, the measurements of which will be apparent to the student from an inspection of the drawing. Fig. 31 is an oblique section, in which but three sides of the cube are intersected by the cutting plane; in this figure, the full view of the sectional surface is projected. Fig. 32

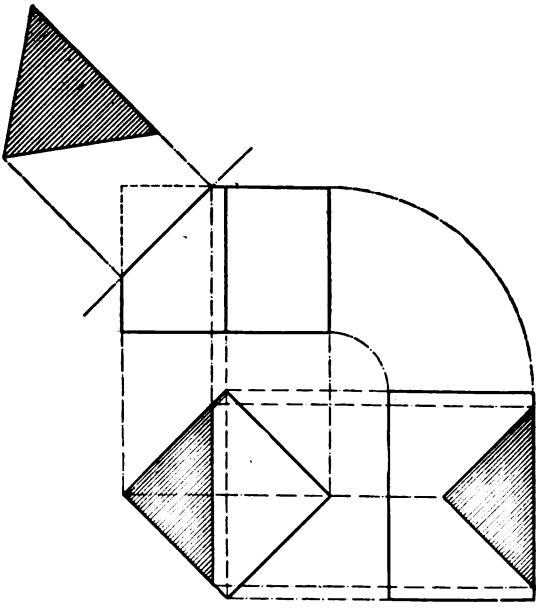

FIG. 31.

represents a section taken at a still different angle and position of the cube. *When a cutting plane passes through a solid having parallel sides, in any direction that causes it to intersect both of those parallel sides, those sides are shown in any view by parallel lines.* Note that in the sectional views of Fig. 32 the opposite edges of the surfaces are defined by parallel lines; thus, since $A\ B$ and $C\ D$ are parallel to each other in the plan of the cube in Fig. 32, so $A'\ B'$ and $C'\ D'$

Digitized by Google

are in the same relation to each other in the side elevation; also, $A''B''$ and $C''D''$ in the full view of the section. The same is also true of $AC$ and $BD$, as may be seen from a comparison of the views.

**79. How the Cutting Plane Is Represented.**—When the cutting plane is shown on edge in a view, it is usually indicated by the same kind of a broken-and-double-dotted line used for the center line and the axial line. The use of

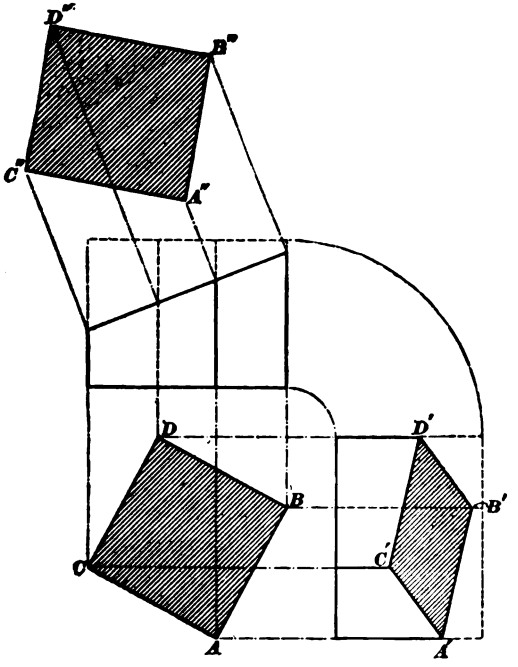


FIG. 32.

this line for these three purposes is somewhat puzzling to the beginner; but as the student is now able to read projection drawings, he can readily determine which purpose the line is intended to serve. It is customary, however, as already mentioned, when center and axial lines are used, to mark them as such by neat lettering. A section line in a complicated drawing is usually designated by a letter placed

Digitized by Google

at each end of the line, to which reference is made in the following manner: If, in the view where the cutting plane appears as a line, it is lettered A–B, the full view of the section is designated as a "section on the line A–B."

**80.** The problems for this plate, of which there are four, consist of the projection of the section drawings indicated in the accompanying illustrations. They are to be reproduced on the plate by the student to the dimensions given on each figure. The cutting plane is indicated by the line *A–B*, and the views shown may be understood by a careful study of the figures on the plate illustrating each problem. The direction of a certain line in each plan is changed in these views, and the cross-section is accordingly represented as foreshortened in the front and side elevations. A view is also to be projected in which a full view of the sectional surface will be seen. The plate is to be divided into four equal spaces by horizontal and vertical lines. Problem 16 is to occupy the upper left-hand space.

The student is recommended not to refer to the reduced copy of the plate more frequently than is necessary to enable him to fix the location of the views on the drawing; he should learn to depend on his own knowledge of projection.

---

PROBLEM 16.

**81. To project sectional views of an octagonal prism, the cutting plane crossing the solid at an oblique angle and leaving a portion of the upper surface intact.**

EXPLANATION.—The position of the prism and the angle of the cutting plane is shown in Fig. 33. This figure is to be drawn, as at (*a*) in the left-hand portion of the space, to the size required by the dimension figures. The plan is then copied to the right, as at (*b*), but in a relatively different position, as will be seen by the arrangement of the letters and the direction of the line *C D*. Thus, the edge *a*, which in the plan of (*a*) is on the extreme left of the figure, occupies a position nearer the lower part of the drawing in the plan at (*b*). This shifting of position of the plan may be

Digitized by Google

effected by describing circles circumscribing the octagons and drawing the diameter $C D$ at an angle of 30° to **V P**, as shown in the plan at ($a$). This diameter is then drawn in a vertical position in the second plan ($b$), after which the arc $D a$, as measured on the first, may be set off with the dividers on the second plan. The projections of the front and side elevations are then made in the regular way. The projection of the full view is accomplished by drawing projectors at right angles to the cutting plane $A B$. At a convenient distance, as shown at ($c$), draw the center line $a'' j''$, and from this line set off with the dividers the distances from the line $a e$ as found in the first plan. As similar positions have corresponding letters in the different views on the plate, the student will have no difficulty in recognizing the method of transfer, it being the same as that mentioned in Art. **53.** Observe that the sides of the section $b' c'$ and $g' o'$, and $b'' c''$ and $g'' o''$, are parallel in every view shown, since the sides $b c$ and $g o$ ($f$) are parallel, as shown in the plan of the solid. The same is true of $h g$ and $c o$ ($d$), as seen at $h'' g''$ and $c'' o''$ in ($c$) (see Art. **78**).

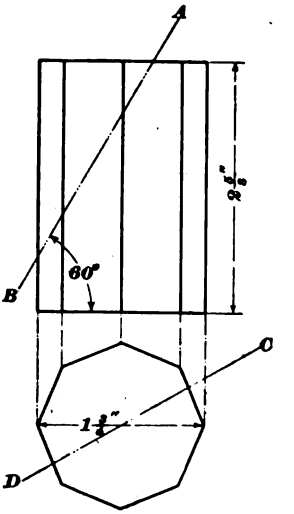

FIG. 33.

The student will finish the drawing on the plate in as complete a manner as in the drawing of the cube in Fig. 29, but omitting all reference letters. The surface of all sections in each view is to be cross-hatched, as in Figs. 29–32.

---

PROBLEM 17.

**82. To project sectional views of a hexagonal pyramid.**

The dimensions and position of the pyramid and the angle of the cutting plane are indicated in Fig. 34. Any

Digitized by Google

section of a pyramid taken at right angles to the axis of the solid is a polygon having an outline similar to the base of the pyramid. The polygon representing the section of any pyramid thus intersected varies in size as the cutting plane passes through the pyramid at a point on the axis nearer the base or the vertex of the pyramid. If the cutting plane passes through the vertex and the base, or through two sides and the base of the pyramid, the section is a triangle. Any other section is a polygon having sides unequal in length, but equal in number to the sides of the polygon forming the base of the pyramid.

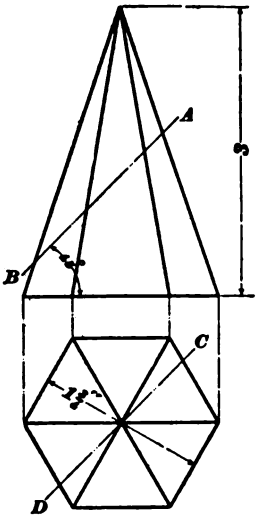

FIG. 34.

EXPLANATION.—The projections of this solid and its sections do not differ materially from those of the preceding problem. The change of position in the two plans is accomplished by means of the circumscribing circle, the diameter in the first plan being drawn at an angle of 45°, and the arc $Ca$ being measured in a similar manner. This drawing may be more accurately made if the edges of the pyramid are continued by dotted lines to the vertex $O$ in the front elevations, as shown on the plate. A comparison of the reference letters in the different views on the plate will assist the student in the work of drawing these projections, as each line shown is similarly lettered in all views.

---

PROBLEM 18.

**83. To project sectional views of a cylinder.**

The cylinder possesses some points of similarity to the regular prism with respect to its section, viz., a section parallel to its ends has the same outline as the ends, while a section parallel to its axis is a parallelogram. An oblique

Digitized by Google

section of the cylinder is, however, as will be observed during the projection of this problem, an ellipse; and it will further be noted that a certain view of an ellipse is a circle.

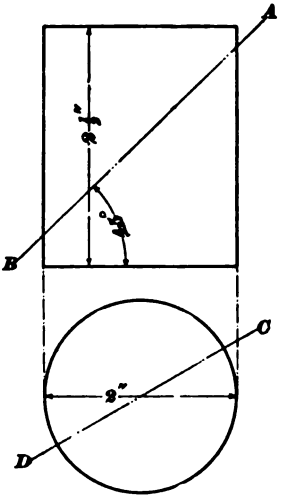

FIG. 35.

EXPLANATION.—The position of the cylinder and the angle of the cutting plane is shown in Fig. 35. Make the edge $a$–$a'$ of the elevation at ($a$) $\frac{5}{16}$ inch long. The plan of the cylinder is first divided into an equal number of spaces (in this case 12), the points being lettered $a$, $b$, $c$, etc., as shown on the plate. These points are then assumed to represent edges, as in the case of the octagonal prism, and are projected to the elevation, their respective positions there being indicated by similar letters; thus, the edge $a$–$a'$ in the elevation represents the edge $a$ as shown on the plan. The change of position in the second plan is effected by drawing the vertical diameter $lf$, which is shown as $CD$ in the first plan at an angle of 30° to **V P**. The position of all points is then noted in a manner similar to the two preceding problems and the projections are completed as heretofore. After tracing the curve of the ellipses through the points located in the different views, the sections are indicated by cross-section lines, as before directed.

---

PROBLEM 19.

**84. To project views of an irregularly formed solid; also, to project a sectional view from a given cutting plane.**

EXPLANATION.—This solid, shown in perspective in Fig. 36, may be described as a transition piece, that is, a form used to connect openings or outlines unlike in shape. Such solids are frequently used in the sheet-metal trades, particularly



Digitized by Google

in boiler and pipework. The dimensions of this solid are better shown in the projection at Fig. 37. Its upper base is a circle 1½ inches in diameter, while the lower base is an oval, which may be drawn by the method shown in *Geometrical Drawing*. The end circle of the lower base is described with a radius of 1 inch from a center located at *B*, Fig. 37, the distance between the centers of the upper and lower bases, as measured on the plan between *A* and *B*, Fig. 37, being ⅜ inch. The vertical height of the solid is 1½ inches.

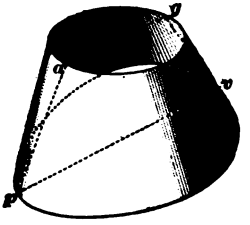

FIG. 36.

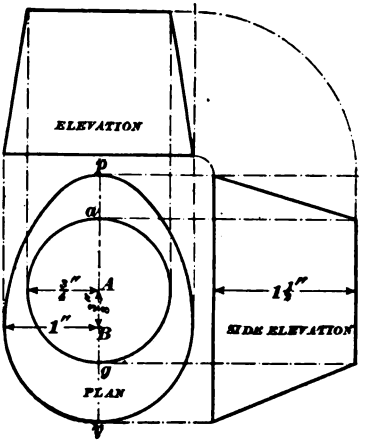


FIG. 37.

The plan and front and side elevations are drawn as shown on the plate, and since the methods of projection are no different from preceding problems representing regular solids, definite instructions for this work are omitted. Particular attention is directed to the method of finding the outline of the section, as its application to various processes of patterncutting is of great importance. The direction of the cutting plane is shown in the side elevation at (*a*) by the line *A B* on the plate. The plan and elevation is to be redrawn on the plate in the position shown thereon at (*b*), and the full view of the section is projected toward the upper part of the drawing. As it is desired to show a section through a certain portion of this solid, it is first necessary to locate a number of points on the line that represents the cutting plane. Since the solid presents no edges that intersect this plane, a number

Digitized by Google

of lines are to be assumed as drawn on the curved surface of the solid.

CONSTRUCTION.—First draw a horizontal line through the central portion of the plan, as *m n* in the drawing on the plate; this divides the figure into symmetrical halves. Next, by spacing, divide the outline of each base into the same number of equal parts, as at *a*, *b*, *c*, etc. on the upper base and *p*, *q*, *r*, etc. on the lower base. Project the points thus located to the elevation and draw connecting lines in both views, as shown. Across the elevation draw the line *C D*, representing the cutting plane, and project the intersections of this line at *1*, *2*, *3*, etc. to the plan, producing each line thus drawn until it meets the horizontal line *m n*. The full view of the sectional surface may now be drawn as follows: Draw projectors vertically upwards from the points *1*, *2*, *3*, etc. in the elevation, and at a convenient height from that view draw the horizontal line *m' n'*. The width of the surface, as measured on each line, may now be set off with the

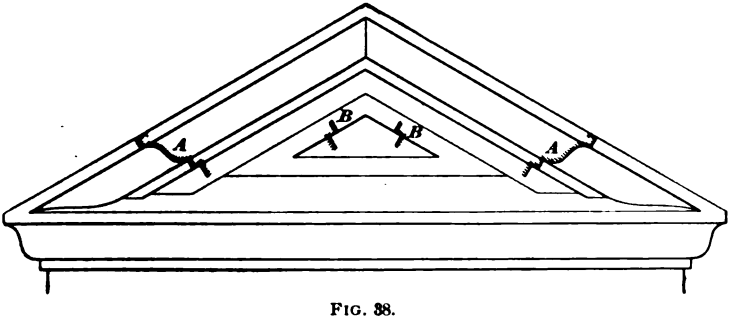


FIG. 38.

dividers, as directed in Art. **53**; thus, take the space *x y* from the plan and transfer it to corresponding positions at *x' y' x'*, on the same line in the full view. Transfer, in like manner, the length of each vertical dotted line shown in the plan to the full view, and trace an irregular curve through the points thus located, completing the projection. This curve may also be traced through the plan and there indicated by short cross-hatching, while the full view of the

Digitized by Google

sectional surface is designated, as heretofore, by cross-section lines in the manner shown on the plate.

**85. Practical Method of Representing Certain Sections.**—In working drawings, particularly those made for the execution of sheet-metal work, a section drawing is often made directly over another view, and the lines indicating

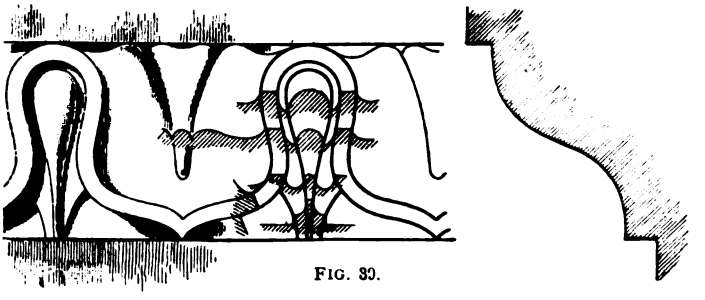

FIG. 39.

the section are distinguished by short cross-hatching, as shown on the plate in the plan of the preceding problem. Short portions of sectional views are also frequently shown in this way on working drawings, in order to indicate the form, or profile, of moldings, the different planes of adjacent surfaces, or the different levels at which certain notations are made. Thus, in Fig. 38, which shows a gable finish, the section at *A* is the profile, or "stay," of the molding, while the section at *B* indicates that the panel shown is a *sunk* panel.

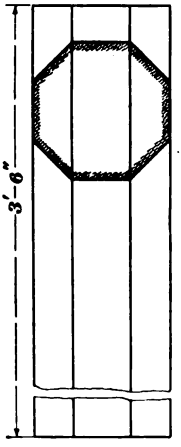


FIG. 40.

In detail drawings (mere projections drawn full size) for decorative sheet-metal work, sections are frequently shown at different portions of the drawing, as in Fig. 39, an inspection of which will enable the student fully to comprehend the character of the various parts, without the aid of another view. Sections, therefore, properly understood and used, may be employed by the

Digitized by Google

Digitized by Google

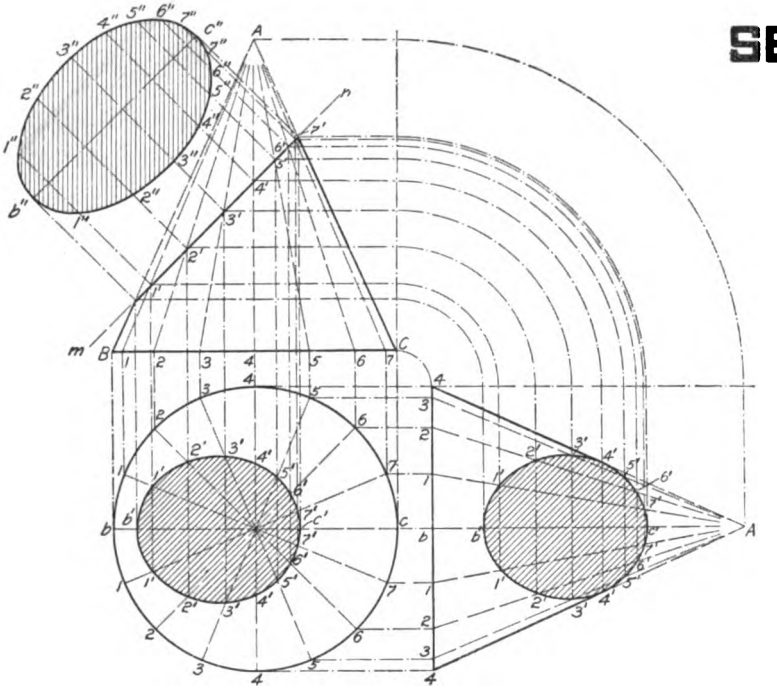

PROBLEM 20.
Case 1.

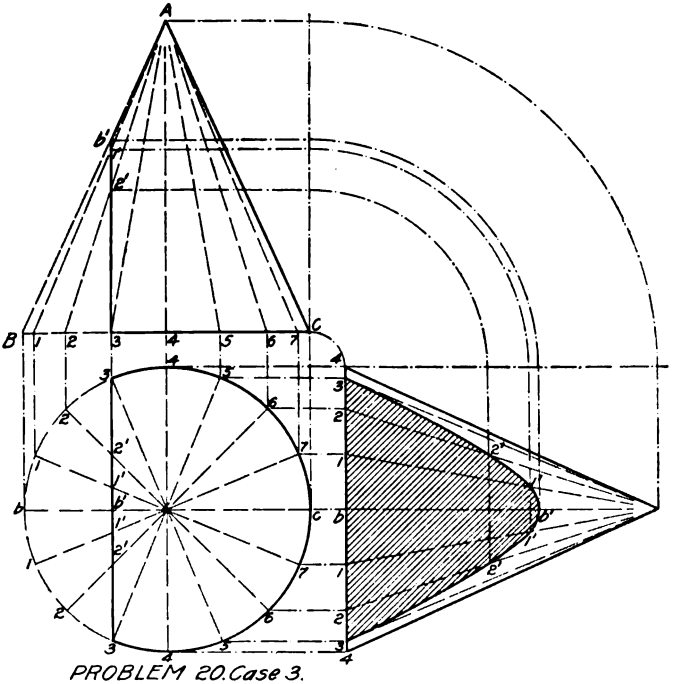

PROBLEM 20. Case 3.



Copyright, 1899, by THE Co

All right

Digitized by Google

NS-II.

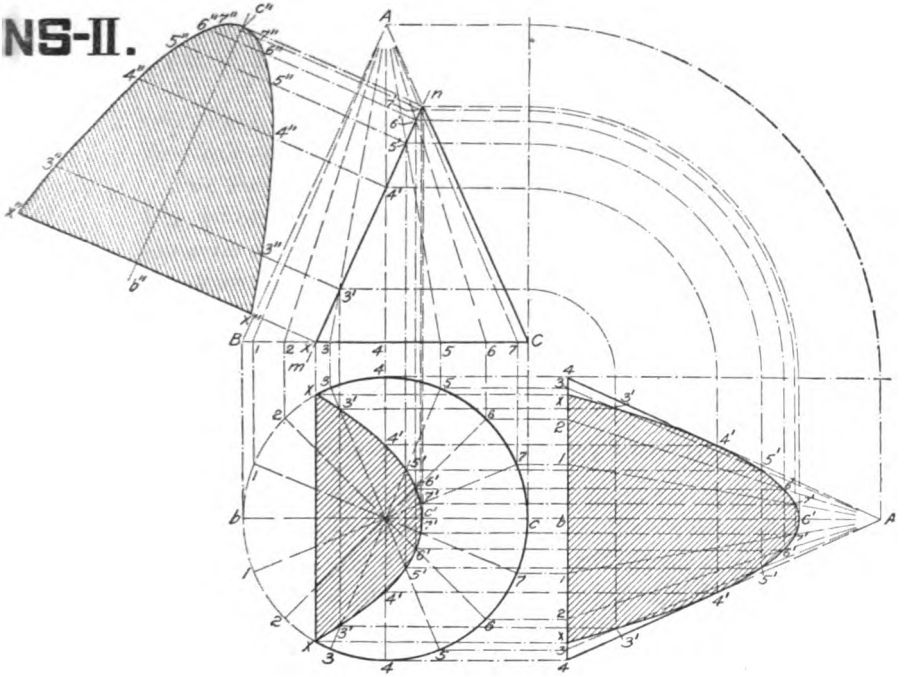

PROBLEM 20.
Case 2

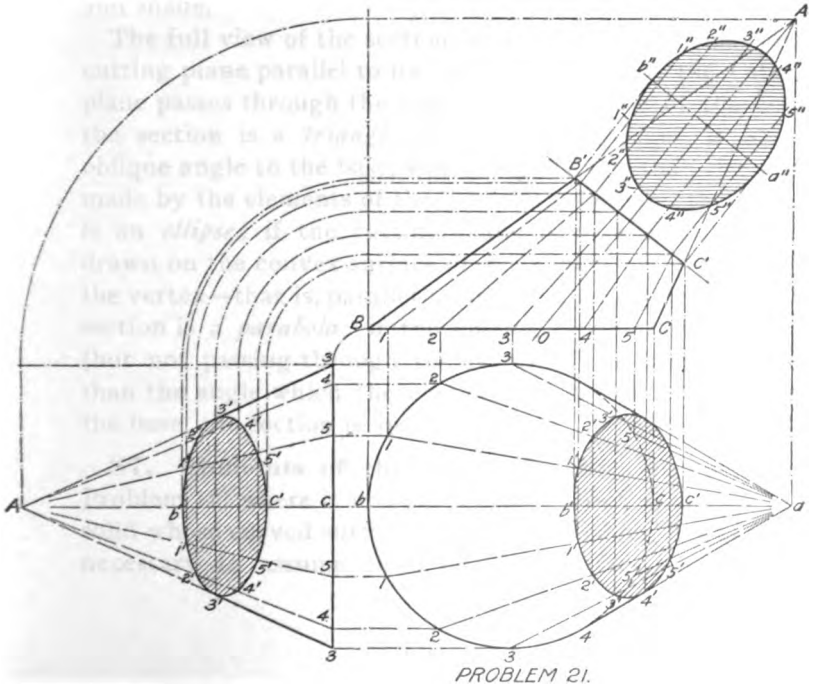

PROBLEM 21.

LIERY ENGINEER COMPANY.

reserved.

JOHN SMITH, CLASS Nº 4529.

Digitized by Google

Digitized by Google

draftsman in many ways, and are frequently a means of shortening the labor of drawing intricate projections.

The lines representing the sides of the octagonal shaft in Fig. 40 are broken in the lower part of the figure, this being a means of indicating that the full length is not shown in the drawing. Reference to the dimension figures gives the reason, it being obviously unnecessary to make a drawing extending the full length of a simple form.

---

### DRAWING PLATE, TITLE: SECTIONS II.

**86. Conic Sections.**—The divisions on this plate are the same as on the preceding plate. The two problems to be constructed are those relating to sections of the cone. Besides their use in many calculations of the arts and higher sciences, conic sections are of great value to the architectural and mechanical draftsman, for the curves thus developed possess great beauty and symmetry, and when used in moldings, present pleasing architectural effects of light and shade.

The full view of the section of a regular cone made by a cutting plane parallel to its base is a *circle;* if the cutting plane passes through the vertex and the base of the cone, the section is a *triangle;* if the cutting plane is at an oblique angle to the base, which angle is less than the angle made by the elements of the cone with the base, the section is an *ellipse;* if the cutting plane is parallel to any line drawn on the convex surface of the cone from the base to the vertex—that is, parallel to any element of the cone—the section is a *parabola;* if the cutting plane is at any angle (but not passing through the vertex of the cone) greater than the angle which the elements of the cone make with the base, the section is an *hyperbola.*

**87. Elements of the Cone.**—In the construction of Problem 19, where it was desired to project a section of a solid whose curved surface presented no edges, it was found necessary to assume lines on that surface, in order to

Digitized by Google

establish points of intersection with the cutting plane. This process must be followed with all solids whose surfaces are curved, and in the case of the cone the lines thus assumed have a further use, as will appear later. The manner in which these lines are located on the surface of the regular cone is of special importance and is as follows: The outline of the base in the plan is first divided by spacing it into a number of equal parts (16, in the plan of Fig. 41). The points thus located are then projected to a view in which the cone is represented as in the elevation of Fig. 41—that is, a right view—and lines are then drawn from these points to the vertex. They are also shown on the plan in the same relation, each line being represented as a radius of the circle at the base of the cone. These lines are called the *elements* of the cone, the term being used in this case as it is in *Arithmetic*.

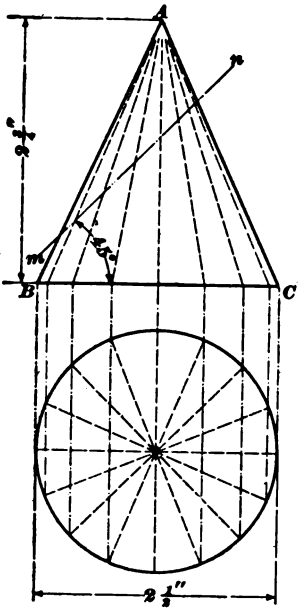

FIG. 41.

In such a view of a cone as presented in the elevation of Fig. 41, only two of these elements (viz., $A\,B$ and $A\,C$) can be shown in their true length—all the others are foreshortened. This must be borne in mind by the student, for it is evident that only on such lines as are shown in their true length can measurements be obtained for any points of intersection. Those points that are located on foreshortened elements are determined in a particular way, as will appear during the construction of the following problem.

The plan and front and side elevations, and the full view of the section for each problem and case, are to be drawn on this plate in the same corresponding relation as on the preceding plate.

Digitized by Google

PROBLEM 20.

**88. To project sectional views of a cone.**

The three cases of this problem should be carefully studied by the student, for on the application of the principles here shown depend nearly all operations of pattern drafting that relate to so-called flaring work. A clear conception of the methods used will be found indispensable to the draftsman that desires to become proficient in his work. An effort should be made on the part of the student to trace each operation to its fundamental principle, when it will be discovered that the drawing practically resolves itself into a continuation of problems relating to the true lengths of foreshortened lines. Since such problems have occupied his attention during the drawing of the earlier plates, he should have no difficulty in following the constructions here given.

**Case I.**—*When the cutting plane is oblique to the base and intersects all the elements of the cone.*

The position of the cone, its dimensions, and the angle of the cutting plane are shown in Fig. 41.

CONSTRUCTION.—Draw a right plan and elevation and represent the cutting plane *m n* (see plate) by a line drawn at an angle of 45° with *B C*, cutting *A B* ½ inch from *B*. Divide the circle that represents the outline of the base of the cone into any convenient number of equal parts (in this case 16). Draw lines from these points (*b*, *1*, *2*, *3*, etc.) to the center; next, project these lines—or *elements*, as they are called—to the elevation. Project the intersections of the elements in the elevation with the cutting plane *m n* to the corresponding elements in the plan and trace a curve through the points thus obtained.

Attention is called to the fact that, although the distances between the points found in this manner are unequal, yet the foreshortened view of the sectional surface thus shown in the plan is a true ellipse, as is also the full view of the section next to be drawn. Project a side elevation to the

Digitized by Google

right (see Art. **61**), also showing a foreshortened view of the section—an ellipse of a different curvature.

**Case II.**—*When the cutting plane is parallel to one of the elements, the section being in this case a* **parabola.**

EXPLANATION.—Fig. 42 is a right plan and elevation, giving the dimensions of the cone. The cutting plane *m n*

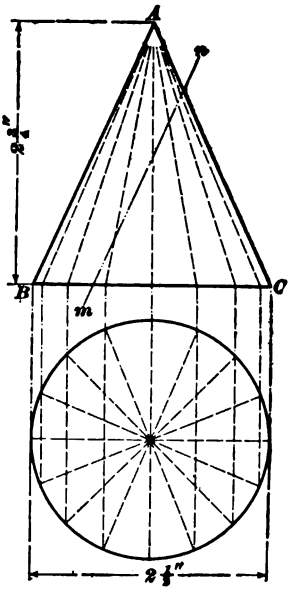


FIG. 42.

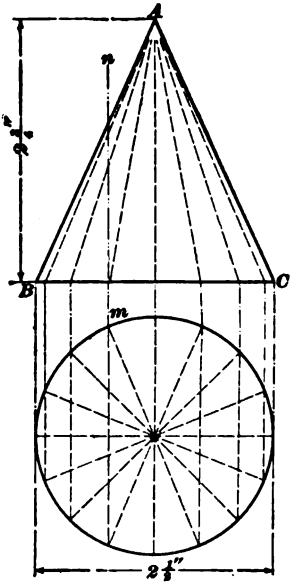


FIG. 43.

is, in this case, parallel to the side *A B* of the cone and cuts *B C* $\frac{5}{8}$ inch from *B*. The method of drawing these projections is precisely similar to that in the preceding case, and since corresponding points are similarly designated in the different views shown on the plate, the student should experience no difficulty in completing the drawing.

**Case III.**—*When the cutting plane is perpendicular to the base of the cone, the section being an* **hyperbola.**

EXPLANATION.—To produce that section of the cone known as the hyperbola, the cutting plane may form with

Digitized by Google

the base any angle included between a right angle and the angle formed by an element with the base (as the angle *A B C*, Fig. 43). The dimensions and position of the cone and the cutting plane are shown in Fig. 43, and since the method of projection is the same as in the two preceding cases, the student may complete the views without further instruction. In this case, the projection of a separate full view may be omitted, the latter being shown in the side elevation.

---

PROBLEM 21.

**89. To project sectional views of a scalene cone.**

EXPLANATION.—This solid, which is of varied form and of frequent occurrence in the metal trades, is an irregular geometrical figure. It is a cone whose axis is inclined to its circular base. All the elements of a regular cone are of equal length, but the elements of a scalene cone are necessarily of variable length, for, since its axis is inclined toward a portion of the base, the elements in that part of the surface must be shorter. It is to be noted, in this case, that the axis of the cone shown in Fig. 44 does not pass through the center of the circle that represents the base of the solid.

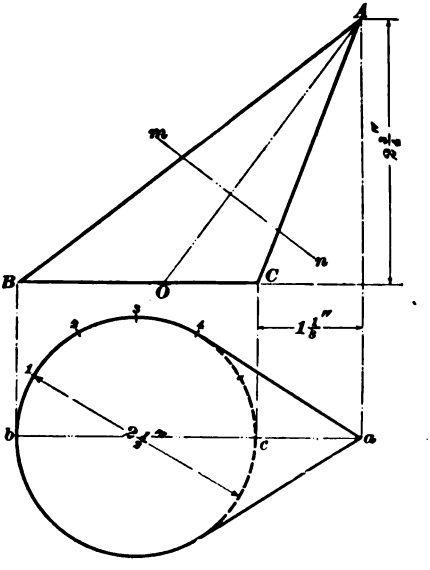


FIG. 44.

CONSTRUCTION.—To reproduce this drawing on the plate, draw first the horizontal line *b a* in the plan 3⅛ inches long, as called for by the dimension figures in Fig. 44; next, describe the circle *b 3 c*

Digitized by Google

2½ inches in diameter from a center located on the line *b a*, its circumference passing through the point *b*. Project the elevation according to the dimensions given in Fig. 44. The axial line is next drawn; bisect the angle *B A C* and draw the bisector *A O*; represent the cutting plane *m n* by a line drawn perpendicular to *A O* and cutting *A C* ⅝ inch from *C*.

The method of projection for the various views of this solid is the same as in former cases; that is, divide the outline of the base in the plan into a convenient number of spaces (12 in this problem), and from points thus located draw the elements to the apex *a* (see plate). Next, project these elements to the elevation, and finally project their intersections with the cutting plane to the different views, as shown in the drawings on the plate. Note that the full view of the section, which in this problem is taken at right angles to the axis of the solid, is an ellipse. If the cone were in an upright position—that is, with its base at right angles to the axis (as that part of the cone above the cutting plane in Fig. 44)—the solid would be termed an "elliptical" cone. This, strictly, is not a geometrical solid, but its characteristics in projection drawing are somewhat similar to the regular cone, although the elements in each quarter of the base are always of unequal length.

The student should now be able to project any sections that may be desired.

---

### DRAWING PLATE, TITLE: INTERSECTIONS I.

**90. The Miter Line.**—To represent properly the intersections of the surfaces of solids—or to "draw the miter line," as it is commonly called—is the last process of projection used before the patterns for any sheet-metal work may be developed. It has already been remarked that plane surfaces intersect in a line; the representation of the intersection of plane surfaces is therefore a very simple process, the draftsman merely having to define each surface by

Digitized by Google

Digitized by Google

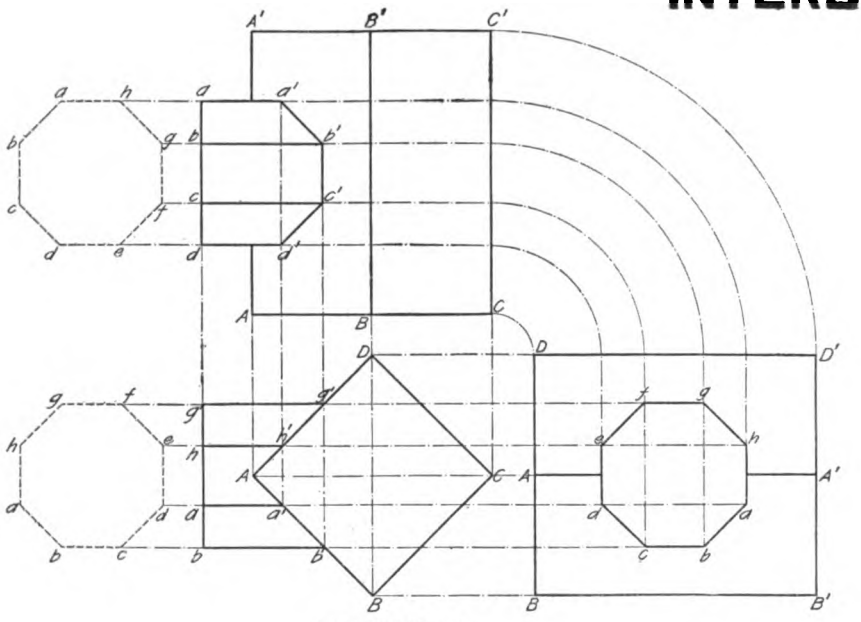

PROBLEM 22.

Case 1.

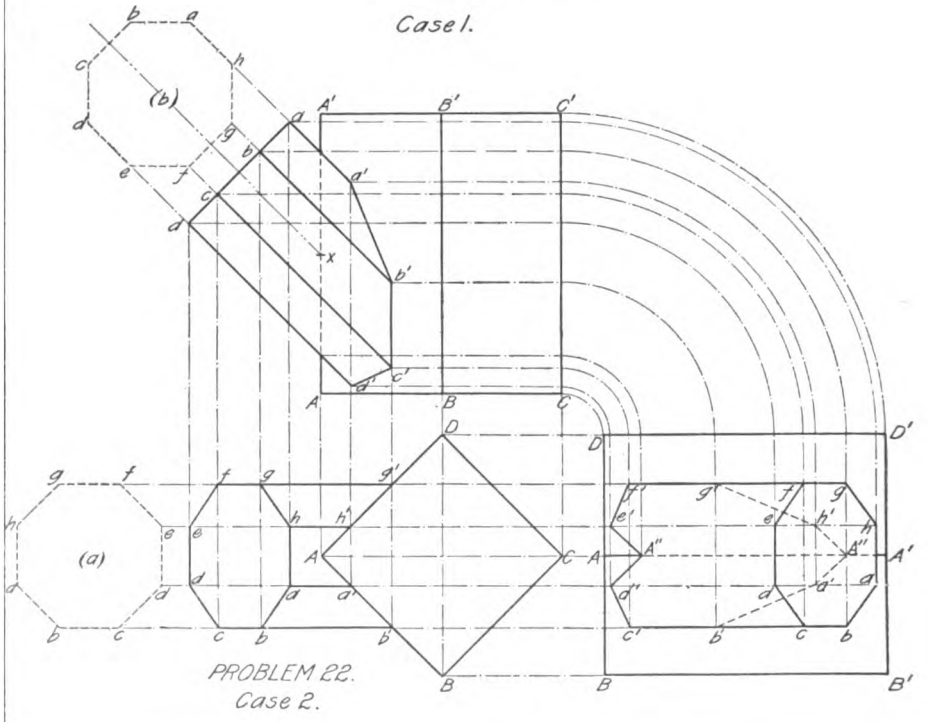

PROBLEM 22.
Case 2.



Copyright, 1899, by THE Co

All right

Digitized by Google

# ECTIONS-I.

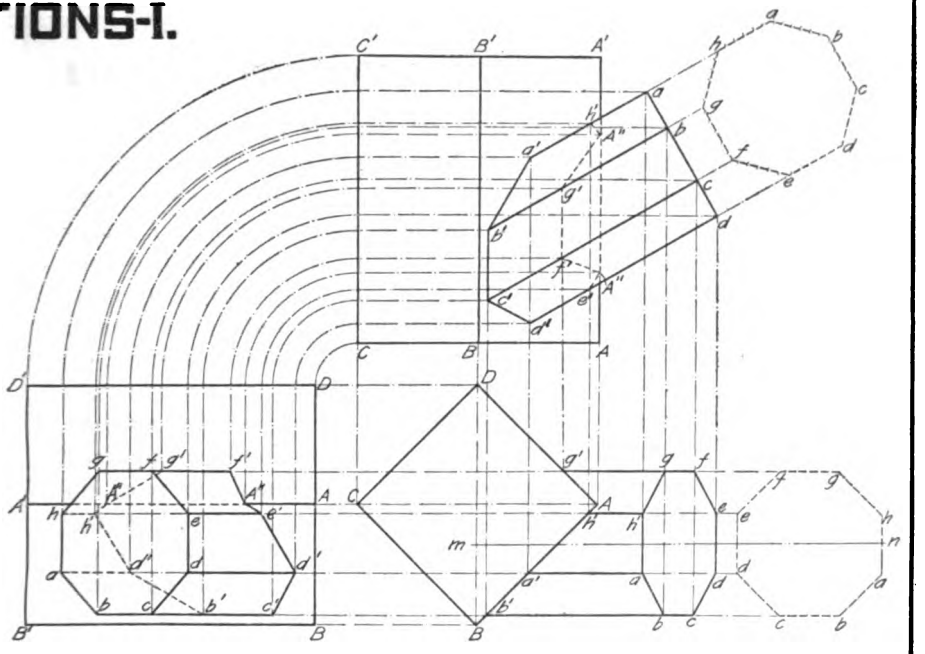

PROBLEM 22.

Case 3.

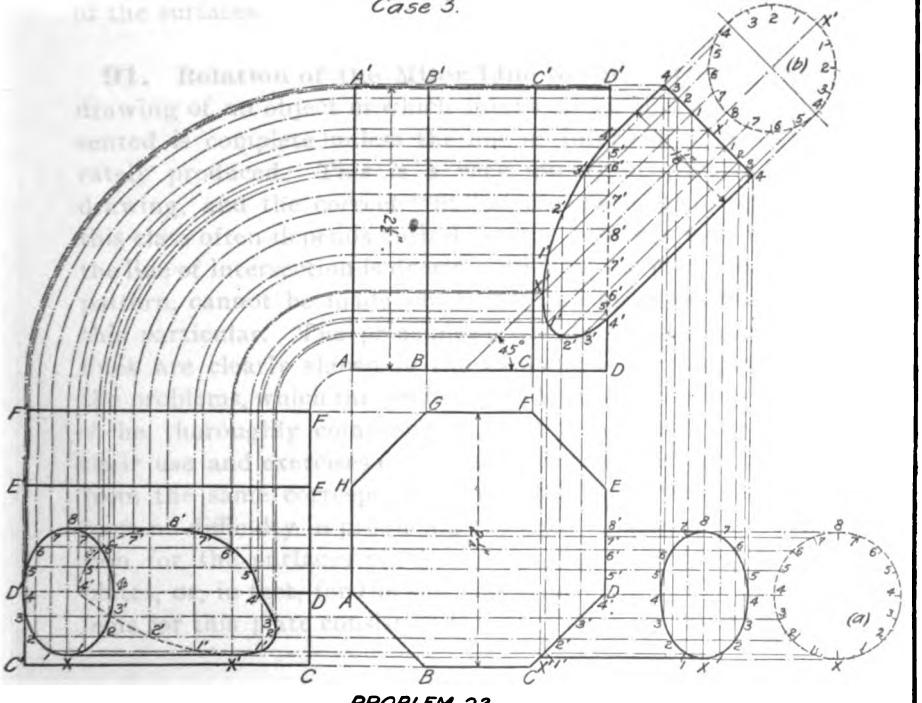

PROBLEM 23.

...IERY ENGINEER COMPANY.

...reserved.

JOHN SMITH, CLASS Nº 4529.

Digitized by Google

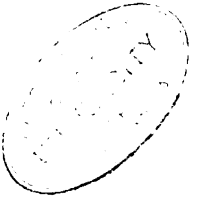

Digitized by Google

the application of the regular projection methods already explained. The intersection of curved surfaces is apparently more complicated, but only because it is necessary to locate a greater number of points than are required for the intersection of plane surfaces. The location of points for the representation of the intersection of curved surfaces is done in a manner somewhat similar to that already shown in connection with the projection of plane surfaces having curved outlines. There is, however, this important difference to be observed: in the case of the surfaces mentioned, their projection is accomplished by means of *points* located on their outlines; while in the case of the intersection of curved surfaces, it is necessary to locate *lines* in such positions on each surface that they will lie in the same plane, although drawn on different surfaces. It is possible to locate a number of these lines in such positions on the drawing that through their points of intersection a curve may be traced that will be the correct line of intersection of the surfaces.

**91. Relation of the Miter Line to the Pattern.**—No drawing of an object in which intersected solids are represented is complete unless the line of intersection is accurately produced. This is a very important part of the drawing, and the correct "fit" of the pattern in work of this class often depends entirely on the accuracy with which the line of intersection is drawn. In fact, a development, or pattern, cannot be made until the drawing is complete in this particular. The principles governing the use of these lines are clearly shown in the explanation accompanying the problems, which the student should study carefully; for, if he thoroughly comprehends the principles governing their use and exercises due care to see that lines are drawn from the same corresponding points in each view, he will have no difficulty in producing the correct lines of intersection for the surfaces of the solids represented on these plates, or, in fact, for the surfaces of any solid. The problems for this plate consist of the projection of intersecting

Digitized by Google

solids having plane surfaces. The solids are shown in perspective in the illustrations accompanying each problem, and reference to the projections on the plate will be sufficient to show the method of finding the lines of intersection.

---

PROBLEM 22.

**92. To project views of intersecting prisms.**

When the plane or curved surfaces of any solid so intersect as to present one continuous surface—that is, so that the surfaces meet "edge and edge" in the same plane—no line of intersection is necessary, since such surfaces are relatively in (and a part of) the same plane. When, however, the surfaces of one solid intersect a central portion of the surface, or surfaces, of another solid, it is necessary that the line of intersection—that is, the boundary lines of the surfaces of the intersecting solid—should be accurately drawn.

**Case I.**—*When the axes of the prisms intersect at an angle of 90°.*

EXPLANATION.—The solids for the projection of this problem are shown in perspective in Fig. 45, which represents also their position in the intersection of Case I. The figure consists of an upright shaft in the form of a quadrangular prism with a horizontal octagonal prism intersecting, or "mitering," at right angles along the axial lines of the two solids. The projection and arrangement of the solids is seen in the drawings for this problem on the plate. It will be noticed that the octagons drawn in dotted lines in the figure do not form a part of the finished drawing, but are thus drawn to facilitate the projection, as the edges of the solids may thus be determined before the side view is drawn. It is often convenient to place portions of views temporarily on the drawing in this manner, as much labor is thereby saved. The

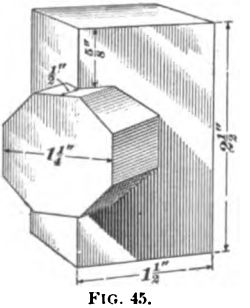

FIG. 45.

Digitized by Google

plan is completed first and the remainder of the drawing finished in the usual way, as may be seen from the reduced copy of the plate. It is thus shown that the correct line of intersection is found by simple methods of projection, the position of the points in the line being determined by projection from the different views.

CONSTRUCTION.—Draw the plan $A\,B\,C\,D$ in its proper position, as shown on the plate, and next construct the elevation $A\,A'\,C'\,C$, thus completing the projection of the quadrangular prism as though that solid alone were to be represented. Draw a horizontal axial line (not shown on the plate) for the octagonal prism through both views, and at the left of the views thus drawn construct a full view of the end of the octagonal prism, as shown by the octagons in dotted lines on the plate. Next draw the lines that represent the edges of the octagonal prism in both views. From the points of intersection of such lines in the plan with the edges $A\,B$ and $A\,D$ of the quadrangular prism, draw primary projectors to corresponding lines in the elevation. Draw connecting lines through the points of intersection thus determined in the elevation, as shown at $a'\,b'\,c'\,d'$ on the plate. This completes the projection of that view; the side elevation may then be projected by means of secondary projectors, as in former problems.

This plate is divided in the same manner as the preceding plate, and the projections for this case are drawn in the upper left-hand space.

**Case II.**—*When the axes intersect at an oblique angle.*

This projection is completed as shown on the plate. In this, as in the preceding case, the plan is first drawn; but before it can be completed, a portion of the elevation has to be drawn in order to determine the outline of the octagonal surface in the plan (Problem 6).

CONSTRUCTION.—First draw the outline $A\,B\,C\,D$ in the plan, and then construct the octagon shown in dotted lines at $(a)$, from the points of which draw horizontal lines to the plan of the quadrangular prism, in the manner shown. Next

Digitized by Google

draw the elevation of the quadrangular prism, and locate the point $x$ midway on the line $A\ A'$; the angle of inclination of the octagonal prism is in this case 45°, and a line at that angle is then to be drawn through $x$ for the axial line of that solid. Construct the full view of the end of the octagonal prism at ($b$), and from the points $e$, $f$, $g$, etc. in that view, draw lines of indefinite length toward the right; intersect these lines at $a'$, $b'$, $c'$, and $d'$ in the elevation by vertical primary projectors drawn from corresponding points in the plan, thus establishing the line of intersection in the elevation. The plan is then completed by drawing primary projectors vertically downwards from the edge view of the end of the octagonal solid in the elevation and tracing the outline of the inclined surface thus designated, as in Problem 6. The side elevation is next projected by the arc method of secondary projectors, as heretofore. Note that the intersection of the upper portion of the octagonal surface is to be represented in that view by dotted lines.

**Case III.**—*When the axes are at an oblique angle, but do not intersect.*

EXPLANATION.—The position of the solids is shown in the drawings on the plate, and the projections do not differ materially from those of the two preceding cases. The octagonal solid is, in this case, inclined at an angle of 30°, and its axial line $m\ n$, as shown in the plan, is drawn $\frac{5}{16}$ inch below the center of the quadrangular prism. The order of procedure is the same as that given for the drawing of Case II, and will present no difficulties to the attentive student. It is necessary, however, to use extreme care in these projections, in order that the position of points in the different views may be located *in the same corresponding position with regard to one another.**

* Too much stress cannot be laid on this important statement; as the student progresses with the projection of the views, he will see the importance of this matter. The work must be done slowly, keeping the pencil points well sharpened; the position of the points in the drawing may then be accurately determined, if the views are constantly compared. If this is done, there will be no difficulty attached to any of the problems to follow in this Course.

Digitized by Google

PROBLEM 23.

**93. To project views of a prism intersected by a cylinder.**

EXPLANATION.—Fig. 46 is a perspective view of an octagonal prism intersected by a cylinder at an oblique angle, the axes of the solids not intersecting. The arrangement of the views, the dimensions, and the angle of inclination are shown on the plate. The projection of this problem is very similar to the last case of Problem 22. Note that the position of the two solids is such that the axis of the cylinder intersects the edge $D$ of the prism. The circles that represent the end surface of the cylinder in each view are divided into a convenient number of equal spaces, and from the points thus located lines parallel to the axis of the cylinder are drawn on its surface. These lines are then projected in the same way as the lines that represented the edges of the octagonal prism in Problem 22. Since the surface of the cylinder is a curved surface, the line drawn through the points of intersection of the two solids will be a curved line.

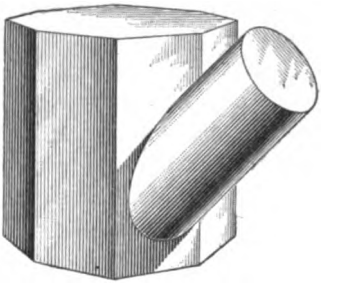

FIG. 46.

**94. General Instruction Relating to Intersections.** When points are located on the full view of a surface in a plan and elevation, as on the circles at ($a$) and ($b$) in the drawings on the plate for the last problem, care must be taken that the distinction between the different views is maintained; thus, the point $x$, at ($a$) and in the plan, is located at $x'$ at ($b$) and in the elevation, both positions on the drawing representing the same position on the solid. Any other points thus located on an outline will be changed in a corresponding way with relation to one another. To project intersections of solids, all of whose surfaces are bounded by parallel lines, or on whose surfaces parallel lines may be

Digitized by Google

drawn that will also be parallel to the axis of the solid, it is necessary to first draw a view that will show the intersect*ed* surface, or surfaces, in one line—that is, "on edge." Such views have been drawn in the plans of the preceding problems. The lines of the intersect*ing* solid are then represented in this view, and the points of their intersection with the upright surfaces are projected to the elevation in the manner described.

It will be seen that, if all the surfaces of any intersecting solids are plane, their edges or outlines alone will suffice for finding the lines of intersection. If the surfaces are curved, it is merely necessary to locate a number of points on the outline of the full view, through which to draw parallel lines similar to those drawn on the cylinder in Problem 23. This practically changes, or reduces, the cylinder to a solid bounded by a number of plane surfaces. In the case of Problem 23, the cylinder has really been treated as though it were a prism having a number of sides equal to the number of spaces into which the circles were divided. This would actually have been the case had straight lines been drawn between the points thus located on the circles at (*a*) and (*b*). Had this been done, the line of intersection would also have been represented by a series of short lines drawn between the points located by projection methods.

---

### DRAWING PLATE, TITLE: INTERSECTIONS II.

**95.** This plate is divided in the same manner as the preceding plate, and the problems occupy the same relative positions.

**96. Intersections of Cylinders.**—*The intersection lines of cylinders equal in diameter and intersecting one another in the same plane—that is, so that their axes also intersect—are always represented by straight lines in a view that shows the axes in their true length.* This is the case in the projections that are shown in Fig. 47, which represents objects

Digitized by Google

Digitized by Google

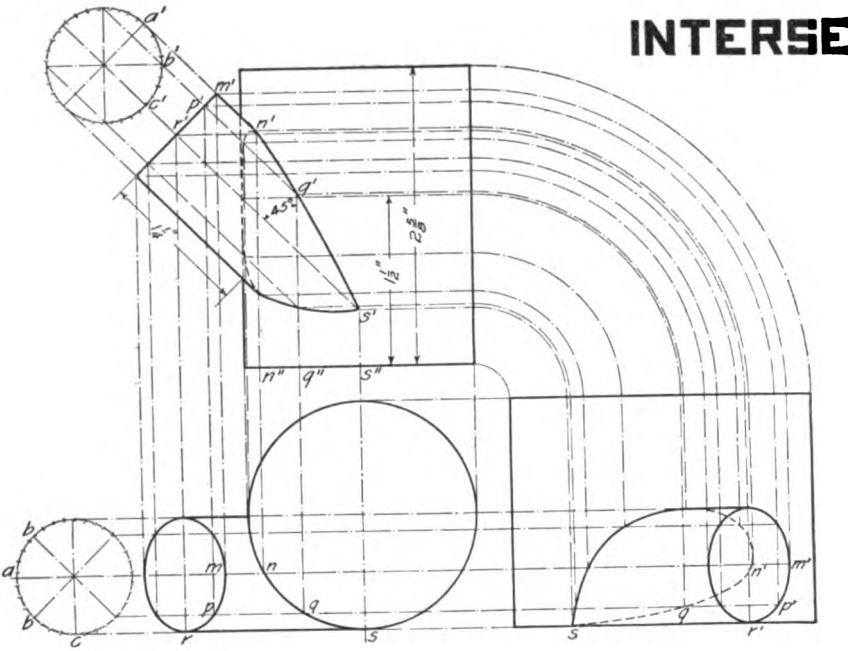


PROBLEM 24.

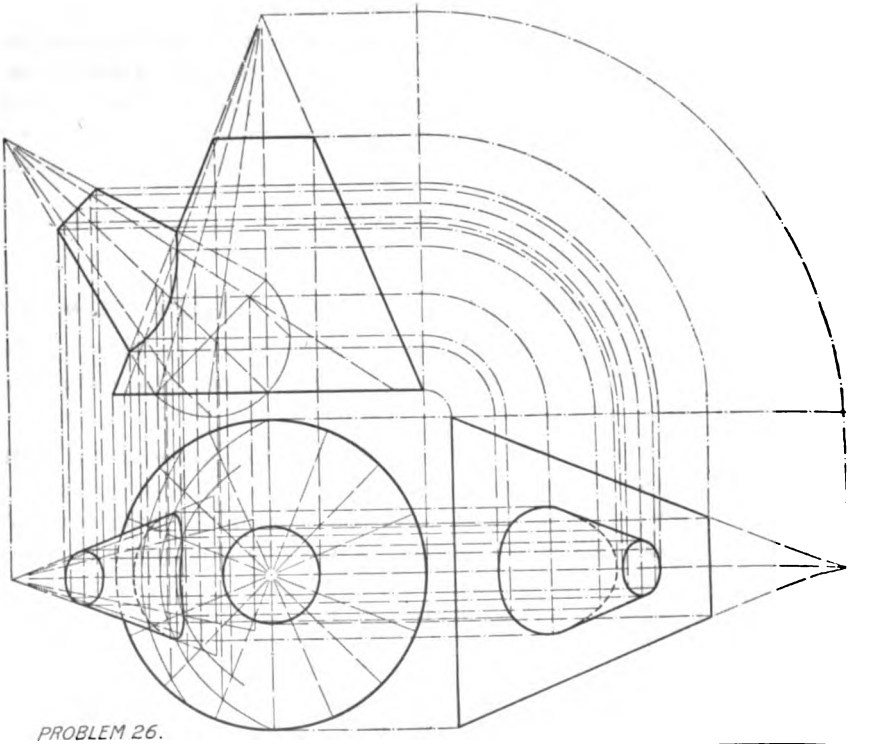

PROBLEM 26.



Copyright, 1899, by THE C

All rig

Digitized by Google

# ITIONS-II.

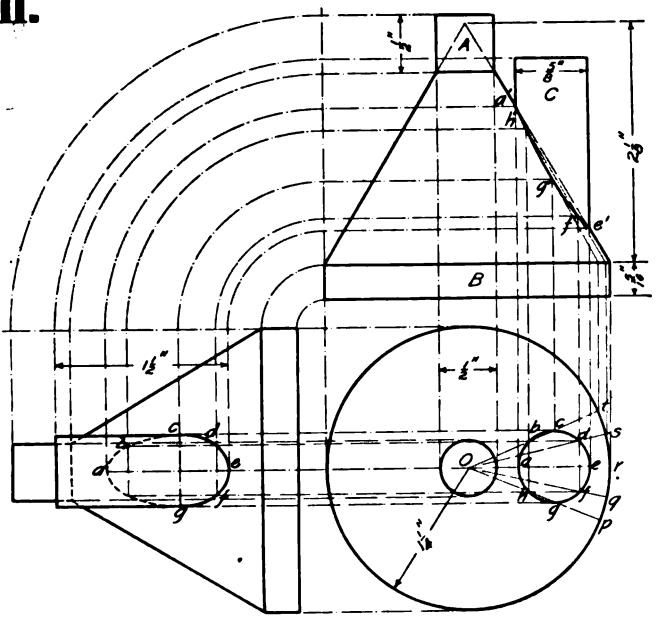


PROBLEM 25.

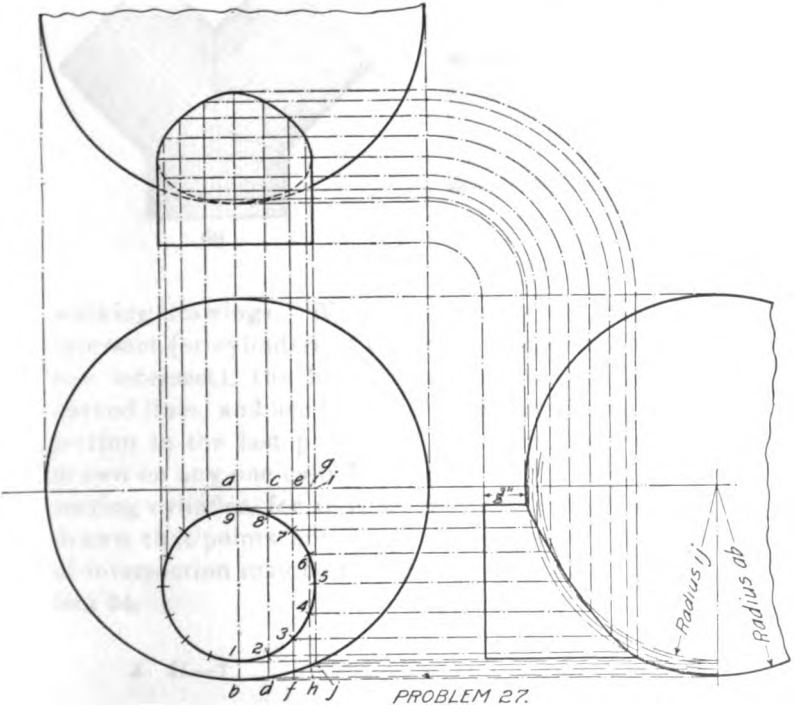


PROBLEM 27.

IERY ENGINEER COMPANY.

eserved.

JOHN SMITH, CLASS No 4529.

Digitized by Google

Digitized by Google

that are familiar to all sheet-metal workers; namely, pipe angles (*a*), elbows (*b*), Y's (*c*), and T's (*d*). The same is also true of similar moldings "mitered" in a plane in which the true length of all members of such moldings may be shown. The line of intersection may always be found in such cases by bisecting the angle made by the pipe or moldings. Fig. 47 also illustrates an example of line shading often used by draftsmen to designate cylindrical surfaces on

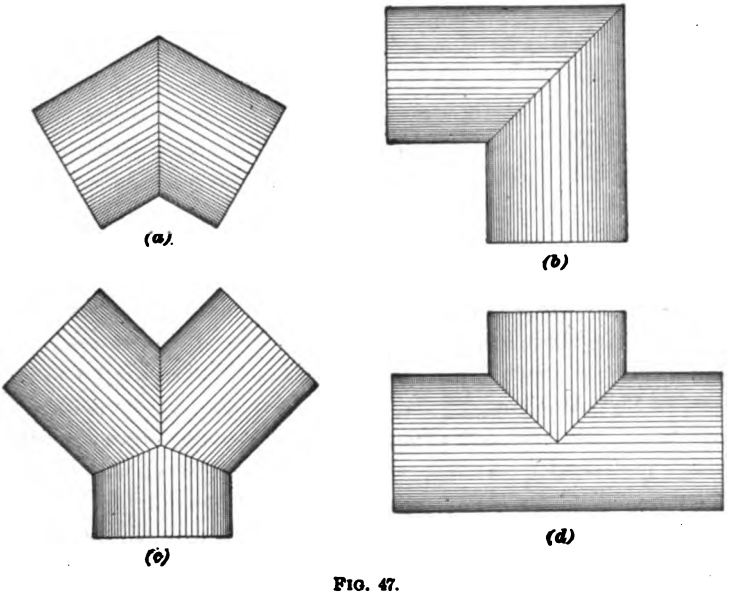


FIG. 47.

working drawings. When cylinders of different diameters intersect (or cylinders of the same diameter whose axes do not intersect), the lines of intersection in any view are curved lines, and are found in a manner similar to the projection in the last problem. The lines, however, that are drawn on any one cylinder must be projected to the intersecting cylinder, for it is at the intersection of lines thus drawn that points are established through which the curve of intersection may be traced. This is illustrated in Problem 24.



Digitized by Google

PROBLEM 24.

**97. To project views of intersecting cylinders of unequal diameters.**

EXPLANATION.—Fig. 48 is a perspective view of a branch Y of occasional occurrence in blowpipe work. The arrangement of the views and the method of projection are shown on the plate, and since it is similar to those of drawings that have been made on the preceding plate, no definite instructions are necessary. The diameter of the larger cylinder is 2 inches and that of the smaller 1 inch, while the angle of intersection shown in the elevation is 45°. The position of the two cylinders is such that the outline $r\,s$ of the smaller cylinder in the plan is tangent to the circle that represents the large cylinder. Note the position of points on the circle that represents the end surface of the smaller cylinder in the plan, at $a$, $b$, and $c$, and their corresponding location at $a'$, $b'$, $c'$, etc. in the elevation (Art. **94**). Also, observe that certain points on lines drawn on the surface of the smaller cylinder, as the lines $m\,n$, $p\,q$, and $r\,s$ in the plan, are projected to the front elevation, where they are represented as lines at $n'\,n''$, $q'\,q''$, and $s'\,s''$. These corresponding lines are in the same plane and are the lines drawn on the surface of the larger cylinder, as above mentioned. Through the points of their intersection with lines drawn from $a'$, $b'$, and $c'$ in the elevation, the curved line of intersection of the two cylinders is to be traced, thus completing the problem. Project the side elevation as heretofore.

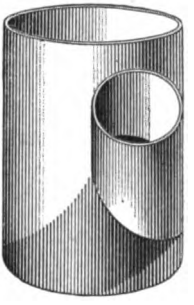

FIG. 48.

PROBLEM 25.

**98. To project views of a cone intersected by a cylinder, the axes of the two solids being parallel.**

EXPLANATION.—Fig. 49 is a perspective view of a steam-exhaust head, a modification of which is in common use.

Digitized by Google

The drawing on the plate is a complete projection of the same, in which the proportion of the cylinder $C$ is increased, in order to show the method of projection to better advantage. Observe that the position of the object is reversed, as the drawing is thereby facilitated. The elevations on the plate show that the lines of intersection of the two cylinders $A$ and $B$ with the cone are represented by straight lines; this is always the case when a cylinder whose diameter is equal to a section of the cone intersects in this manner.

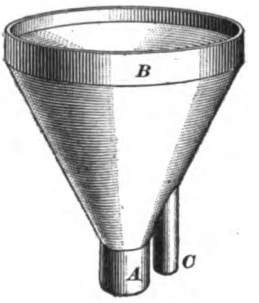

FIG. 49.

CONSTRUCTION. — First, construct the elevation of the cone in its proper place on the drawing and in accordance with the dimensions given on the plate. The cylinders $A$ and $B$ are then drawn as shown. Next, draw the plan and represent the outline of the cylinder $C$ in that view by a circle of the diameter indicated on the plate. Divide this outline into a convenient number of equal spaces (in this case 8), as shown at $a$, $b$, $c$, etc., and through each of these points draw elements of the cone, as $Op$, $Oq$, etc. Project these elements to the elevation and locate thereon by projection methods the position of the points of intersection $a'$, $h'$, $g'$, etc. Complete the elevation by drawing the outline of the cylinder $C$ in that view and tracing the line of intersection of the two solids through the points $a'$, $h'$, $g'$, etc. Project the side elevation by the usual methods.

---

### PROBLEM 26.

**99. To project views of intersecting cones.**

Fig. 50 is a perspective view of an object that illustrates this problem. The cones are shown in a somewhat more convenient proportion for this problem in the projections on the plate. The construction of this problem must be

Digitized by Google

followed very carefully, as a number of the operations are necessarily made over one another on the drawing and the student must be careful to distinguish each process.

FIG. 50.

CONSTRUCTION.—Describe a circle $2\frac{3}{4}$ inches in diameter in the plan to represent the lower base of the larger, or intersected, cone in that view; and from the same center describe a circle $\frac{7}{8}$ inch in diameter, to represent the upper base. Project the front elevation of this cone, and define the frustum $2\frac{1}{4}$ inches high, as shown on the plate, producing the outlines until they meet in the vertex. Next, through the point $F$, Fig. 51, draw the axial line of the smaller, or intersecting, cone (the line $A\,B$, Fig. 51) at an angle of 45° with the base of the larger cone; locate the point $A$ 3 inches from $F$, and, after fixing the point $C$ 1 inch from $F$, draw $C\,D$ perpendicular to $A\,B$. Draw the outline of the upper base of the smaller cone in the elevation parallel to $C\,D$ and $\frac{3}{4}$ inch from $A$. Draw the full view of the base of the smaller cone at $J\,B\,H$; divide this outline into a convenient number of equal parts, as at $J$, $a$, $B$, $c$, etc., and project these points to the base $C\,D$. Draw the elements of the smaller cone, as shown in Fig. 51, and produce them until they

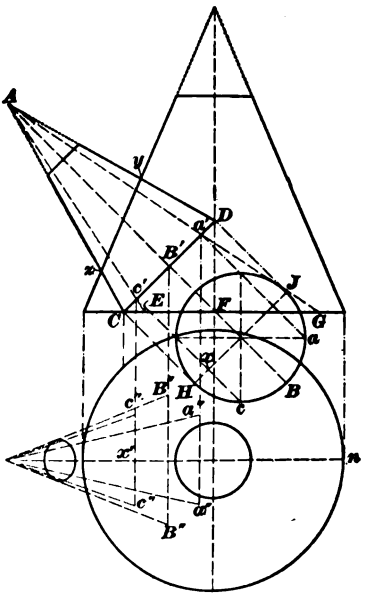


FIG. 51.

Digitized by Google

intersect the base of the large cone at $E$, $F$, and $G$.* In the plan of this drawing, a series of sections of both cones are now drawn as the sectional curves would appear if each of the elements of the smaller cone shown in the elevation were considered as a cutting plane, as in Problem 20. The sections of the smaller cone will, in each case, be a triangle (Art. **86**), while the sections of the larger cone will be elliptical, parabolic, or hyperbolic curves, as the case may be. The point of intersection with the side of each triangle and its corresponding sectional curve of the larger cone is then projected to the elevation and the line of intersection of the two cones traced through these points. The sectional triangles of the smaller cone are shown in the plan of Fig. 51. Draw vertical primary projectors to the plan from points $a'$, $B'$, and $c'$, and on these projectors set off distances from the horizontal center line of the plan similar to the distances from $H J$ in the full view of the base; that is, make $x' c''$ equal $x c$, etc.

It is not necessary to develop the sectional curves of the larger cone in their entire length, since all that is required is to find a point on each curve that is at the intersection of the triangular sections of the smaller cone. This is better illustrated in Fig. 52, in which is shown the projection of the point $o$ in the line of intersection. A study of this

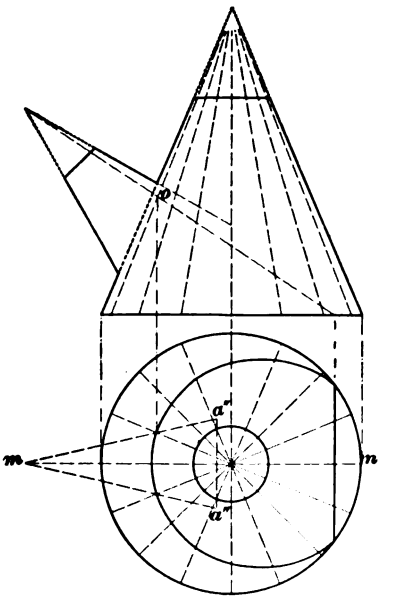


FIG. 52.

* In this case eight elements are represented, since it is not desirable to complicate the drawing by using more, although in practical work it will be found necessary to use a larger number of points in order that the line of intersection may be more accurately traced.

Digitized by Google

figure will show to the student that the operations are similar to those of Problem 20; the process in the case of each point is merely a repetition of that here indicated and need not be further explained. The extreme upper and lower points *y* and *z*, Fig. 51, are the points of intersection of the central section, and may be projected directly to the plan from the elevation, since the outline of the figure in the elevation is really a section on the line *m n* in the plan of Fig. 51. Fig. 53 shows the three sections produced by the above method; that is, the irregular curve *p q r*, Fig. 53, is a section of the larger cone produced by the intersection of the cutting plane *A E*; *s s* and *t t* are found as above described, the section lines being indicated in the figure by short cross-hatching. Project the side elevation as in former problems.

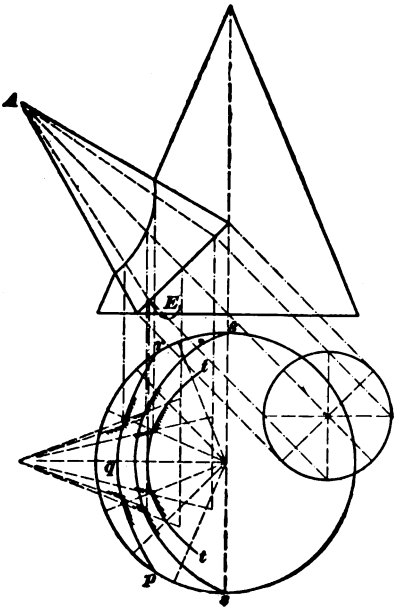

FIG. 53.

The student may, at the completion of the drawing on the plate, erase all the construction lines except those projectors shown on the reduced copy of the plate, those lines only being inked in that are necessary to show the outlines of the figure and the line of intersection in each view, as well as the outer projectors.

---

PROBLEM 27.

**100. To project views of a sphere intersected by a cylinder.**

When the position of these two solids is such that the axis

Digitized by Google

of the cylinder passes through the center of the sphere, as shown in perspective in Fig. 54, the line of intersection is shown in a right elevation as a straight line. In the case of the solid shown in perspective in Fig. 55, the axis of the cylinder does not pass through the center of the sphere, and the line of intersection is an irregular curve, which may be

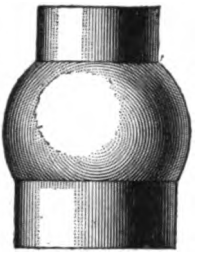

FIG. 54.

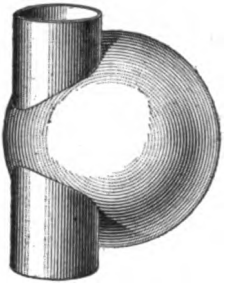

FIG. 55.

found by the following method. Since the construction of this problem involves lines that must necessarily be drawn closely together in the small scale adopted for these drawings on the plate, a proportion is selected that does not admit of the entire figure being shown in the elevations; these projections are therefore finished by broken lines, as indicated on the plate.

CONSTRUCTION.—Draw the plan first and represent the view of the sphere by a circle $3\frac{1}{2}$ inches in diameter. Draw a vertical diameter and from a point midway on the radius *a b* describe a circle $1\frac{3}{8}$ inches in diameter, to represent the end view of the cylinder, on the outline of which locate a number of points by spacing with the dividers, as at *1*, *2*, *3*, *4*, etc. Through these points, in the manner shown on the plate, draw vertical lines, as *a b*, *c d*, *e f*, *g h*, and *i j*, each of which will now represent a cutting plane. Sections of the sphere and cylinder on these lines are now to be produced in the side elevation. These sections, as already stated, are circles and parallelograms, respectively, the diameter of the circles being ascertained from the view in which the cutting plane is shown on edge, as in the plan. In this problem, the side

Digitized by Google

elevation is next projected. Describe arcs representing the sections in the side elevation, using the radii *a b*, *c d*, *e f*, *g h*, and *i j*, the radius *a b* being the great circle of the sphere. By the aid of primary projectors, project the points from the cylinder in the plan to the side elevation, intersecting corresponding arcs in the side elevation. Trace the irregular curve shown in that view on the plate through these points. Next, project the front elevation, thus completing the problem.

**101. Recapitulation.**—The problems of this plate have afforded the student an opportunity for careful study. Owing to the number of points necessary to be found in each figure, the problems may have had the appearance of more or less complication, but if the student, as previously cautioned, will carefully locate the points required, *one at a time*, not hurrying his work nor trying to grasp the entire problem at once, but keeping in mind the different principles in the order presented, and by referring, if necessary, again and again to the primary principles, he will experience no difficulty in making the drawings. He will also be able intelligently to project any view of any object; in other words, he will be able to make any working drawing whatever, and, in addition to this, be able to read and understand any working drawing he may be called on to examine.

Digitized by Google

# DEVELOPMENT OF SURFACES.

## INTRODUCTION.

**1. Definition of a Development.**—A development is a drawing in which a full view of all the surfaces of a solid is represented. Whenever a development is to be drawn (except in the case of solids of very simple form), a projection drawing must first be made. This projection should show the solid in a *right* position. Since the location of the various points in a development is dependent on their corresponding position in the projection drawing, the importance of the projection and the necessity for accuracy in its construction are thus clearly seen. If a solid is bounded entirely by *plane* surfaces, its development can be accomplished by merely projecting their full views, as already explained in *Practical Projection.*

A solid is said to be developed when all surfaces composing it are represented on one plane and in such relation to one another that, if formed or bent up, they will constitute a solid similar to the one represented by the projection drawing from which the development was made. Such a representation is called a **development,** or a **pattern,** the process of laying out the pattern being termed *developing the surfaces of the solid.*

**2. Relation of the Surfaces in a Pattern.**—When it is desired to produce a pattern requiring a combination of several surfaces that are adjacent in a solid, such surfaces must be drawn in the same relation to one another in the development. The surfaces of a solid when thus combined



For notice of the copyright, see page immediately following the title page.

Digitized by Google

in a pattern, or development, bear the same relation to one another that they would if they were considered as being *unfolded* or *unrolled*—the same relation that a paper wrapper would bear to the package from which it had been unfolded or unrolled. The paper wrapper is not always an apt illustration, as the metal worker seldom requires several thicknesses of his material. In the case of the familiar "square pan," however, the ends are folded on one another in precisely the same way as in the paper wrapper.

It will be seen from the foregoing that, were all solids bounded by flat, or plane, surfaces, the subject of developments would present no new problems; it would be necessary merely to study the relation of surfaces to one another, project their full views, and carefully redraw them in the pattern in the same relative position.

**3. Projection Methods Used.**—It has been shown in *Practical Projection* that a single surface is developed, or, as stated, its full view is drawn, by a modification of the same methods that are used to produce the different views of that surface. Many of the operations attendant on the development of solids are like those used in producing full views of single surfaces; or, if not, the principles involved may be traced to their origin in other methods used in projection drawing.

A thorough knowledge of projection is absolutely necessary that the student may understand the operations involved in developing the surfaces of a solid. The position of the several points located in a drawing and their corresponding location in an imaginary way on the object itself must be definitely fixed in the student's mind. Each line must be determined in its relation to the other lines of the drawing and its ideal, or imaginary, location definitely ascertained; the surfaces, also, must be treated in a similar way. The student must picture to himself the completed object as it will appear when the surfaces laid out on the drawing board in the development are formed up in their final relation to one another. This imaginary part of the study is of even

Digitized by Google

greater importance in the case of developments than in projection drawing. As the student has already had some drill in this part of the work, the subject he is now studying should be found less difficult than would otherwise be the case. In projection drawing, the surfaces of the solid are represented as being in their proper position; in the development, the same surfaces are represented as being developed or spread out on the surface of the drawing board.

## GENERAL CLASSIFICATION.

**4. General Classification of Solids.** — An accurate development may be drawn for the plane surfaces of any solid, or for surfaces having, when related to a given line on such surface, a curvature in one direction only. In general, it may be stated that any solid may be developed on whose surfaces it is possible to lay a straightedge, in continuous contact, in any one direction. To use, in this connection, the illustration of the cylinder, it will be seen that, if the straightedge is resting on the surface parallel to the axis of the cylinder, it will remain in contact at all points. If, on the other hand, the straightedge is resting on the curved surface and is not parallel to the axis of the cylinder, the surface will be in contact at a single point only. However, the fact that it is possible to place the straightedge in continuous contact on the surface allows the inference that such surface is capable of accurate development.

The same rule applies to solids of irregular form. The methods of development, however, are not the same in certain variously formed solids, as will be explained later. There are certain forms whose surfaces, owing to their curvature in several directions, are not capable of being thus laid out on a flat surface; i.e., not capable of being developed. On the surfaces of solids of this class—the sphere, for example—it will be found impossible to lay the straightedge in contact in any direction. For, if placed on such a surface, there will be but one point of contact—that of the *tangential*

Digitized by Google

point. Tangential contact indicates that development can be accomplished only in an approximate way. For purposes of development, then, it is convenient to separate all solids into two general classes according to the result obtained in developing their surfaces. These two classes are: solids whose surfaces admit of accurate development and solids whose surfaces admit only of approximate developments. Approximate developments are, however, so nearly accurate for the purposes of the sheet-metal worker that the kind of solid is more clearly marked by the method of developing its surface than by the result obtained by the development. Therefore, in order to distinguish the kinds of solids, both accurately and approximately developed solids are divided into three main classes according to the method used in developing their surfaces. These classes are explained later.

**5. Accurate Developments.**—Solids whose surfaces are capable of accurate development are of frequent occurrence in the sheet-metal-working trades. To this class belong all prismatic, cylindrical, and conical forms, whether of regular or irregular geometrical form. It includes all articles or objects whose covering may be formed without being submitted to the operations known to trade workers as "raising" or "bumping." Any solid whose surfaces may be unrolled or spread out on a flat surface without "buckling," may be accurately developed. Although it is often necessary, especially when working metal of unusual thickness, to take into account the stretching of the material when producing patterns for many objects, these objects belong to accurately developed solids, providing that the metal does not have to be "raised" or "bumped" in order to form the object. It is, therefore, essential that the metal worker should thoroughly understand the nature of the material and be well informed as to the best manner in which to provide for all laps and edges used in the construction of the finished article.

It is the purpose of *Development of Surfaces* to define and

Digitized by Google

illustrate *theoretical developments* and the means used by the draftsman in their production.

**6. Approximate Developments.**—The sphere and other solids whose surfaces have a curvature in two or more directions are examples of objects capable of only approximate development. The test by the straightedge is (with a single exception, which will be fully explained later) a positive indication of the class to which any solid may be assigned. Patterns for the surfaces of objects of this class may be *approximated*, because it is necessary for the metal to undergo the operations of "raising," or "bumping," before it will conform to the exact surface represented in the drawing. It is necessary in these cases to make allowance in the pattern for the stretching of the metal. This part of the subject, as it does not belong to theoretical development, is not treated here, but is taken up later in the Course.

---

## SOLIDS THAT MAY BE ACCURATELY DEVELOPED.

**7.** There are three distinct methods in common use, by means of which patterns are produced for solids whose surfaces are capable of accurate development. It is advisable, therefore, to separate the different varieties of these forms into three general divisions, in order that their development may be studied in a systematic manner. This classification may be made by studying the manner in which the covering of these solids—to use again the illustration of a wrapper—would be unrolled or spread out if done by rolling the solid on a flat surface.

**8. Solids Developed on Parallel Lines.**—A convenient illustration of the manner in which the surfaces of a solid will appear when unrolled as above indicated may be found in the following example, which serves at the same time to define a property peculiar to solids of a certain form. Let the continuously adjacent surfaces of the prism shown in Fig. 1 (*a*) be carefully covered with thin paper, as at

Digitized by Google

Fig. 1 (*b*). Denote each of the four surfaces by a letter, as *A*, *B*, *C*, and *D*, and further designate the edges of the prism by the letters *a b*, *c d*, *e f*, and *g h*. As the ends of the paper covering meet at the edge *a b*, that edge of the

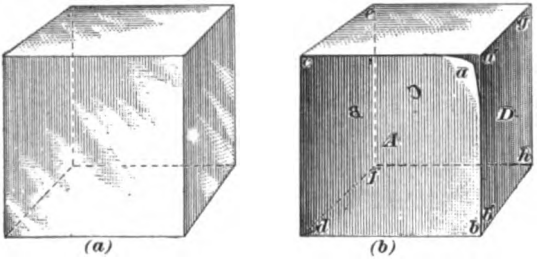


FIG. 1.

surface *D* may be denoted by the letters *a' b'*, as shown in Fig. 1 (*b*). Assume now that the prism is laid on the drawing board, the surface *A* face down, and the paper covering removed by turning the prism over and over, the paper remaining on the surface of the drawing board, as shown in Fig. 2 (*a*) and (*b*).

Two important principles relating to developments are demonstrated in these illustrations. *First*, as will be seen from Fig. 2 (*b*), the edges *a b*, *c d*, *e f*, *g h*, and *a' b'* are all

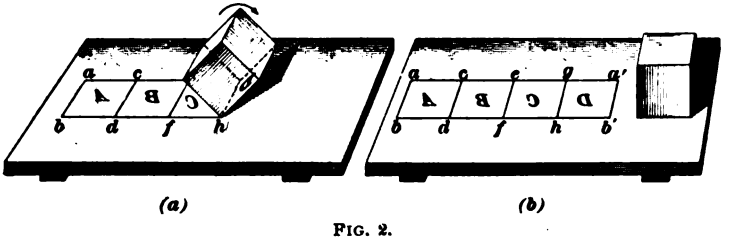


FIG. 2.

parallel to one another. This is true both in the development and on the solid, as may be readily seen by the student, the only difference being that on the solid certain of the lines are in different planes, while in the development they are all in the same plane. *Second*, it will be noted that, since the letters shown in Fig. 2 are reversed, the

Digitized by Google

*outer* surface of the paper covering in Fig. 1 (*b*) corresponds to the *under* surface in Fig. 2 (*b*). In a similar manner, it is learned from the second principle that positions indicated

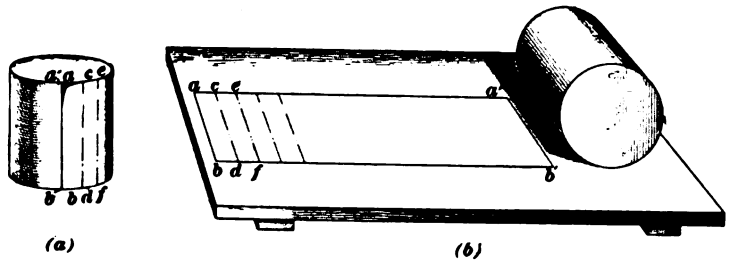


FIG. 3.

on any surface of a solid, as shown in a projection drawing, are reversed when shown in the development of the solid.

The same treatment of the cylinder is found to produce results closely resembling those shown in the case of the prism. The cylinder is represented in Fig. 3 (*a*) as covered with paper, a number of lines being ruled on the covering parallel to its axis, as shown at *c d*, *e f*, etc. The paper is shown unrolled in Fig. 3 (*b*), and it will be observed that not only the outer edges *a b* and *a' b'* are parallel to each other, but that all other lines parallel to the axis of the solid appear in the development parallel to one another and to the edge lines *a b* and *a' b'*. The student that has ever flattened out a piece of straight molding, as for cornice work, probably noticed a number of straight parallel lines on the metal where it had been bent in the brake. This is an illustration similar to that of the cylinder, the different members of the molding being considered as the various surfaces of an irregular solid.

Such illustrations indicate that parallel lines bear some relation to certain forms, and it will be shown that the patterns for these forms are developed by a method whose principles are based on this fact. Many solids may be at once recognized as belonging to this division. In general, any solid whose edges are parallel may be located here. In the case of solids having curved surfaces, it may be stated

Digitized by Google

that, if it is possible to draw a series of parallel lines on such surfaces, the development of the solid may be produced by the same methods given for this class. The first general division, therefore, comprises those solids whose surfaces may be developed on *parallel lines*.

**9. Solids Developed on Radial Lines.**—When the test given to the cube and the cylinder in Figs. 1 to 3 is applied

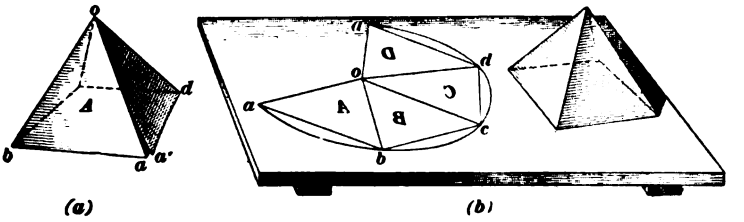


FIG. 4.

to the pyramid, it is found that the lines indicated on the paper converge to a point, as shown in Fig. 4 (*a*) and (*b*). It is noticed, also, that this point *o*, Fig. 4, defines the position of the vertex of the pyramid. The same may be said of the cone, illustrated in Fig. 5 (*a*) and (*b*). If lines

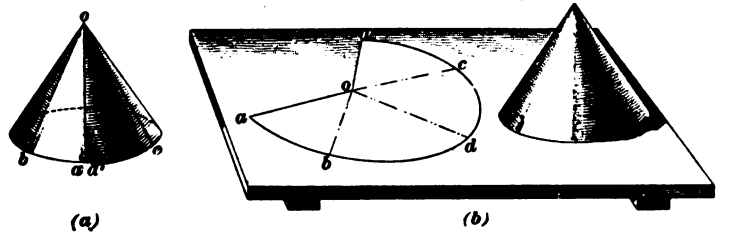


FIG. 5.

are first indicated on the surface of the cone corresponding to its elements, it will be found, when the covering is unrolled, that these lines also converge to a point, as in the case of the edges of the pyramid.

It was found possible to institute a system of obtaining developments based on parallel lines in the case of the prism and cylinder; in a similar manner, it is quite evident in this case that a system dealing with radial lines should

Digitized by Google

produce like results. Since, in projection drawing, the elements of the cone are known to be useful factors in determining the position of points on its surface, it may readily be conceived that their use in a somewhat similar way may be adapted to developments. This is found to be the case; and a second general division of solids is thus made, consisting of those forms whose surfaces may be developed on *radial lines*. Included in this division are all regular tapering solids and such irregular forms as are derived from regular solids. The metal trades furnish many examples of solids belonging to this division; in fact, the writers of several works on patterncutting confine their instruction almost entirely to the development of solids of this character.

**10. Solids Developed by Triangulation.**—There are many forms of irregular surfaces to which the test of the straightedge may be applied and the conclusion thereby reached that their surfaces admit of accurate development. It may also be concluded that neither of the two former methods is applicable, for neither parallel lines nor a series of radial lines may be drawn on their surfaces. Many of these solids are not of such a shape as to admit of their being either turned or rolled on a plane surface. It is found, however, that on every such surface, series of two or more lines each may be drawn in certain directions, forming angles.

On such irregular surfaces it may happen that no two of the angles thus drawn on the solid, or represented—either correctly or foreshortened—in the projection drawing, will lie in the same plane or be equal to each other. Since it is possible thus to project these angles, evidently they may be reproduced on the flat surface of the drawing paper in their correct size. If this can be done, it may be reasonably assumed that the surfaces thus represented will be the same as the corresponding surfaces of the solid. An illustration of this principle, as pertaining to a plane surface, was given under another heading in *Practical Projection*. In *Geometrical Drawing*, the irregularly outlined figure known as



Digitized by Google

the trapezium was divided into two triangles that were in turn reproduced by a method precisely similar to that used in developments for solids of this division. The figure in that problem was a plane figure; but the student, having now had experience in representing solids in projection drawing, should have no difficulty in understanding that it is possible to find a method applicable to the development of irregular surfaces by means of a series of triangles.

In Fig. 6, an irregular solid of this kind is shown. It is the solid whose projection was drawn in Problem 19 of *Practical Projection*. This figure illustrates in a general way the method used in arranging the triangles on the irregular surface of such solids. The triangles are represented in the figure in a perspective way, but they are, of course, always drawn in connection with the usual methods of projection. The third general division, therefore, consists of those solids whose surfaces are developed by *triangulation*—that is, by means of triangles.

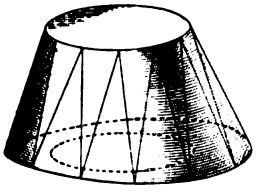

FIG. 6.

**11. How the Division of Solids Is Accomplished.** It is not to be understood that the draftsman actually applies the test of the straightedge in reaching a conclusion as to whether the surfaces of a solid may be accurately or approximately developed. Nor does he roll the object on the drawing board in order to determine whether the method by parallel lines or one of the other methods is to be used. As a matter of fact, he seldom has a model to work from, and, therefore, could not apply such a test if he so desired. But as he studies the drawings and imagines the position of the surfaces as they will appear in the completed object, he is enabled to apply the tests as effectually, in an imaginary way, as though the tests were made with a straightedge. In the same imaginary way, also, he assigns the solid to the general division to which it properly belongs, and thus decides as to the method he will use in the development of its surfaces.

Digitized by Google

A little practice will enable the student to classify the variously formed objects in this way and to select the method that shall be applied in any given case. A very important part of the patterncutter's acquirements consists in being able to recognize in various irregular objects those forms that may be only a portion of some regular solid. In other words, the student must learn to establish in his own mind the connection between complete and perfectly formed solids and those objects in which only a portion of the solid may be represented. The method of development is, of course, the same in both cases, but as a matter of fact, the operations are usually more complicated in cases where the incomplete solid demands the patterncutter's attention. Especially is this true of conical forms, or those developed

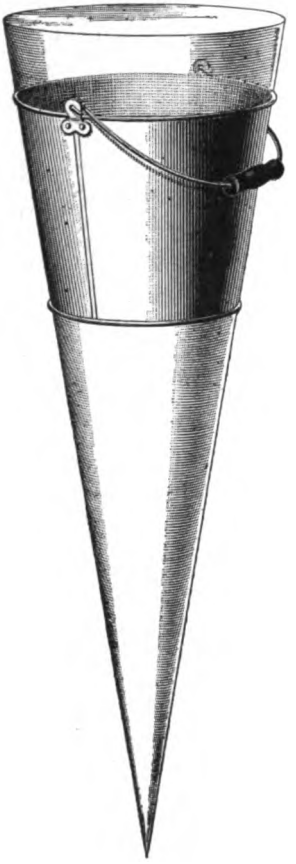

FIG. 7.

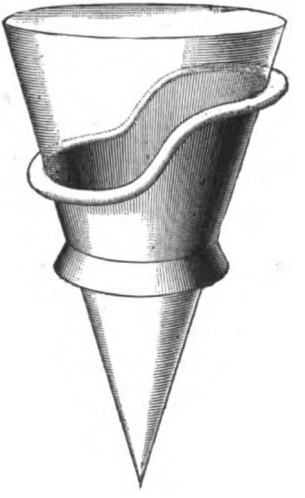

FIG. 8.

on radial lines. Frequent illustrations of this principle may be found in commonly occurring objects. The flaring

Digitized by Google

pail shown in Fig. 7 is seen to be a part (or frustum) of a cone, the completed cone being indicated by the light shading in the illustration.

The same is true of the sitz bathtub in Fig. 8. Here it is seen that the portion of the cone represented by the finished article is an irregular section of the cone; its development is, however, accomplished by the same methods to be shown for regular cones. Another instance is found in the measure shown in Fig. 9. Here are two intersecting cones: a regular frustum of one forms the body of the measure; and an irregular frustum of the other—an inverted cone—forms the lip of the finished article.

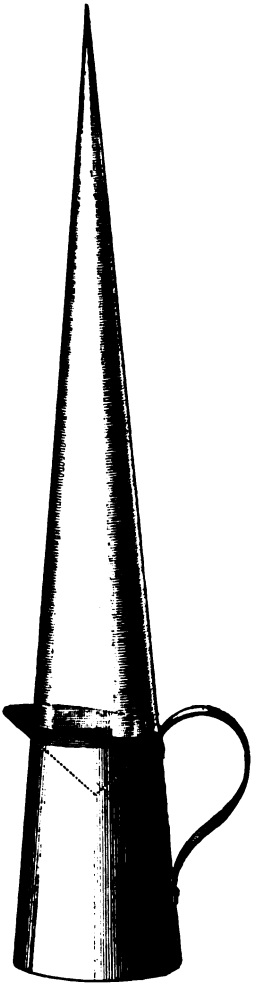

FIG. 9.

All the articles in Figs. 7 to 9 are thus shown to be frustums of regular cones, although varying in the regularity of their bases. In certain cases, as in the "oval" pan body

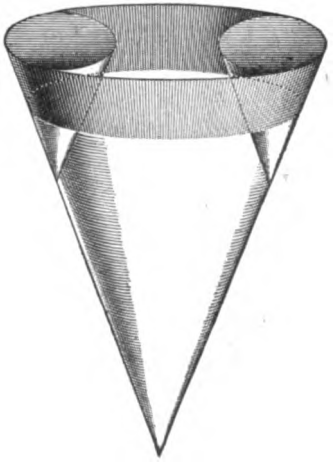

FIG. 10.

represented by the heavily shaded band in Fig. 10, the

Digitized by Google

surfaces may be portions of the surfaces of different cones or of cones differing in size. The bases of this article are elliptical in outline. The ellipses are drawn by circular arcs. The vertexes of the different cones would be represented in a plan view by the centers from which the different arcs are struck. These cones are partially shown in Fig. 10, and in the relation required by the portions of their surfaces that compose the sides of the pan.

It is essential, therefore, that the student should possess a certain familiarity with the forms of the regular solids, to assist him in the classification of the objects that he will be called on to develop. It is with this end in view that a series of plates is to be drawn by the student. The instruction is in the form of problems, and several of the drawings of *Practical Projection* are reproduced for the purpose of showing the development of the surfaces of the solids there represented. The student's attention will first be directed to a consideration of those solids whose development may be accomplished by means of parallel lines.

---

## DEVELOPMENT BY PARALLEL LINES.

**12. Importance of Certain Views.** — It has already been stated that the making of a working drawing is the draftsman's first step toward obtaining a pattern for the surfaces of any solid. The solid in question should be shown in this drawing in such a position that measurements may be taken of its surfaces in all their dimensions. In order to accomplish this, several views may have to be drawn, although a right plan and elevation will usually be sufficient. In some cases there may be given to the mechanic a drawing in which the object is so shown that these dimensions may not be readily obtained. In such cases, operations in projection are required; with these the student is already familiar.

For purposes of development it is important that the view shown should be that one in which the lines of the solid are given in their true length, or, in other words, a *right view*

Digitized by Google

of the solid. In addition to this view there must be given that view also in which the surfaces thus partially bounded by these parallel lines are shown as *on edge*. In some instances, as in the case of a simple solid of which all the dimensions are known, the latter view may be omitted; it is, however, understood as being drawn, for the draftsman knows all of its dimensions. Generally, therefore, before the pattern can be produced, a plan and an elevation showing the solid in a *right position* must be drawn.

In drawing the projections in *Practical Projection*, the right views have first been drawn and inclined views have then been projected from them. This has been done in order to familiarize the student with the appearance of such drawings; but, in every case, the development of the pattern is to be projected from a right view. It is possible for the draftsman to become so expert by practice that, in certain cases, he is enabled to obtain, from foreshortened views, patterns for some surfaces. The beginner should not attempt this, however, since the operations involved are confusing, and should be resorted to only by the experienced patterncutter that thoroughly understands the subject.

**13. The Stretchout.**—As stated in the preceding article, it is essential that, in all cases where the development of solids may be accomplished on parallel lines, the view showing certain surfaces as on edge should either be given or assumed. From such a view, the width of each surface may readily be ascertained. The total width of all these surfaces—the distance around the solid—is called the **girth** of the solid. In case the solid has a curved surface, its girth is found by spacing with the dividers the outline in that view. The girth of the cylinder, for example, is equal to the length of the circumference of a circle that represents the base of the cylinder.

When a distance corresponding to the girth of any solid is represented by a straight line on a flat surface, such a line is called a **stretchout** for the development, or pattern. This line is then marked off by a series of points, the points

Digitized by Google

representing the places at which the line would be bent if formed up to correspond with the outline of the solid represented in the view from which the distances were taken. In the case of curved surfaces, a number of points are located on the outline, as previously indicated. This is usually done by dividing the outline into a number of equal spaces in the same manner as in projection drawing; an equal number of spaces is then stepped off on the stretchout line, whose total length is, in all cases, equal to the girth of the solid. An important point to be observed is that the points thus located on the stretchout must be (although reversed) in a position on the line corresponding to that relatively occupied on the solid.

**14. Position of the Development.**—The position in which the stretchout is placed on the drawing determines the position of the development. This line is always drawn *at right angles to the parallel lines of the solid* and from a view in which these parallel lines are shown *in their true length.*

In making a projection, then, from which to produce the patterns of any object, it is important that a sufficient space be left on the drawing, to one side or the other of that view. It frequently happens that this cannot be done, and, in such cases, it is a common practice to lay an extra piece of paper over a portion of the drawing, on which the development may be produced. When the latter method is adopted, the paper on which the development is made may be used in transferring the outline of the pattern to the metal, and the original drawing may then be preserved in perfect condition.

**15. Development of the Cube.**—For the purpose of explaining to better advantage the use of the stretchout, the development of the cube is presented, step by step, in Figs. 11 to 14, inclusive. A reproduction of this development should be made by the student in accordance with the following instructions, although the drawing is not to be sent to the Schools for correction.

Digitized by Google

The plan and the elevation shown in the left-hand portion of the figures are drawn first. The development could be produced from either view in this case, since in any right view the dimensions of a cube are equal. For the purpose of the illustration, the development is drawn from the elevation. At right angles to the parallel lines in the elevation, draw a line as $MN$, Fig. 11. On this line locate a point at any convenient distance, as at $w$. This point may correspond to any of the upright lines or edges of the solid

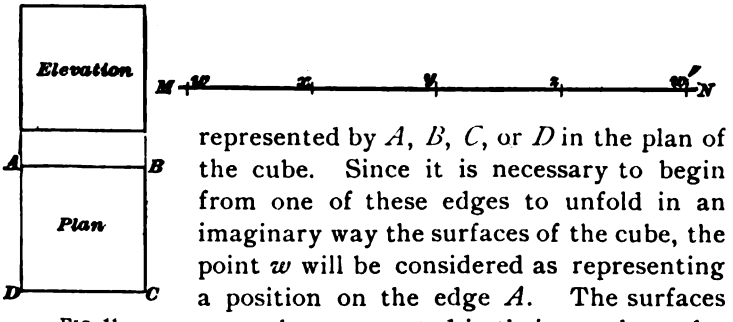


FIG. 11.

represented by $A$, $B$, $C$, or $D$ in the plan of the cube. Since it is necessary to begin from one of these edges to unfold in an imaginary way the surfaces of the cube, the point $w$ will be considered as representing a position on the edge $A$. The surfaces are to be represented in their regular order in the development, that is, the order in which they appear on the solid itself; first, the surface represented in the plan by $AB$, then $BC$, $CD$, and $DA$, in their natural order as they are shown in the projection at the left of the line $MN$. The dividers may, therefore, be set at a distance equal to the length of the side $AB$, and, since the sides of the cube are equal in length, the distances $wx$, $xy$, $yz$, and $zw'$—corresponding, respectively, to the sides represented in the plan by $AB$, $BC$, $CD$, and $DA$—are to be spaced off on the line $MN$.

**16. Laying Off the Stretchout.**—That portion of the line $MN$ included between the points $w$ and $w'$ is called the *stretchout* of the cube. A stretchout may be drawn in any position on the drawing board, at the convenience of the draftsman, but it is invariably at *right angles to the parallel lines of the solid.*

Wherever the stretchout occurs in the drawings of this

Digitized by Google

Course, it is represented by a heavy line, as shown in Fig. 11. It is customary to draw a line of indefinite length quite near the view of the solid that is being developed, as in Fig. 11. When the stretchout is mentioned, the only part of the line referred to is that included between the extreme points $w$ and $w'$, Fig. 11, located to define the total width of the adjacent surfaces. This operation is called *laying off*, or *developing*, the stretchout. It will be seen that if a string equal in length to $w\,w'$ should be stretched around the cube in a horizontal direction, it would exactly reach the entire distance, and the ends would meet, in Fig. 11, at the edge $A$.

The next step is to erect perpendiculars to the stretchout $M\,N$ that shall pass through the points $w$, $x$, $y$, etc. and be produced on both sides of the line. This is done by means of the triangle, in connection with the T square, as in Fig. 12. The lines thus drawn are called *edge lines*, since they represent, in the development, those portions of the surfaces that would form the edges of the solid if the

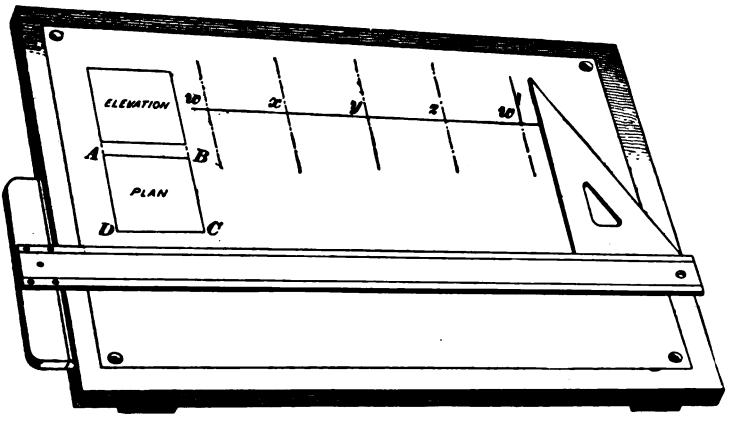


FIG. 12.

pattern were to be cut out and formed up to the shape indicated by the projections. Edge lines are to be represented in these drawings by dash-and-dot lines, as shown in Fig. 12, similar to those used in *Practical Projection* for projectors.

Digitized by Google

Next, the length of each of the upright edges shown in the elevation is marked off on its corresponding edge line

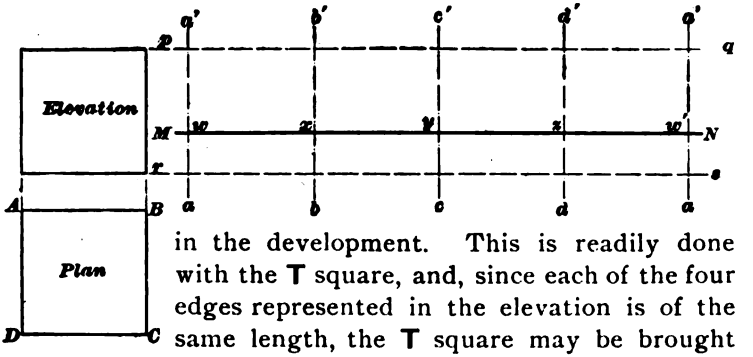


FIG. 13.

in the development. This is readily done with the T square, and, since each of the four edges represented in the elevation is of the same length, the T square may be brought even with the horizontal lines in that view, and a line drawn from each across the development, as shown in Fig. 13. The lines thus drawn are called *developers*, and will be represented in these drawings by broken lines, as shown in Fig. 13. This name is applied to them for the reason that the length of the edge lines is determined—developed—when a developer is drawn from each extremity of the edge shown in the elevation to its corresponding edge line in the development. In this case, the four upright edges of the cube, represented by the two vertical lines in the elevation, are of the same length, and their ends are in the same horizontal lines; therefore, the two developers $p\,q$ and $r\,s$, drawn from the elevation, define the upper and lower boundaries of each of the four upright surfaces of the cube.

The development of four sides of the cube is thus accomplished; and, if desirable, the other two sides may be added to any one of the four that have been developed. Since the method of obtaining a development, as it is now called, or a full view of any side or surface of a solid is already familiar to the student, no further explanation will be given. In sheet-metal work it is generally preferable to make the ends (of forms similar to the cube) of separate pieces of metal, and, on account of the waste of stock, it will seldom be found desirable to combine all the surfaces of a solid in a

Digitized by Google

single piece. Should such a case arise, however, the full view would be projected and afterwards copied into its proper place on the development.

The development of any solid of this class, whose bases are parallel and at right angles to its parallel lines, is always a parallelogram; and, as in the development of the cube in Fig. 13, this is divided into smaller parallelograms, each representing a surface of the solid.

**17. Finishing the Drawing.**—In order to enable the draftsman to distinguish the features of a development at a glance, it is customary to define the outer edges of such a drawing by means of full lines, as is shown in Fig. 14. The outer edges are further distinguished by small arrowheads, while the other edge lines of the pattern are marked near each extremity by a small circle drawn by freehand methods, in the manner shown, thus indicating to the mechanic that the sheet is to be bent along this line. It is sometimes desirable, as in detail developments for certain classes of sheet-metal work, to designate the stretchout by a line drawn with a blue pencil, thus readily attracting the draftsman's attention.

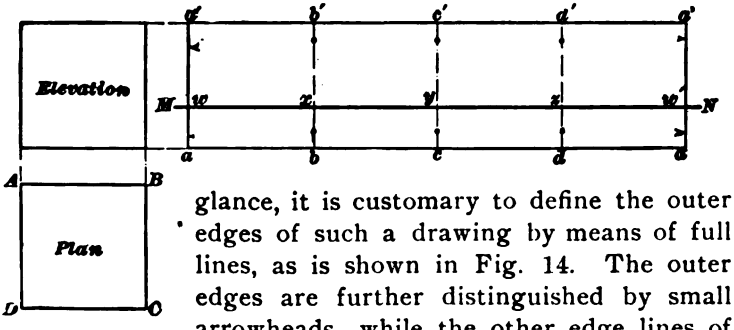

FIG. 14.

The sheet-metal worker seldom resorts to the drawing board in order to produce a development of a simple solid such as the cube, since the same result may be accomplished with the steel square, the sizes being marked out directly on the metal. The development of the cube, however, has been shown in these illustrations, inasmuch as by the same principles any solid of this class may be developed. It may also be stated that the draftsman rarely represents developers

Digitized by Google

or edge lines by the particular lines used for that purpose in this Course. These distinguishing lines have been adopted here solely for the purpose of fixing clearly in the student's mind the principles on which these drawings are made. After these principles have been mastered, the use of such lines in practical work may be discontinued, and the student may then, by the use of light pencil lines only, proceed with the development of such other solids as he may be called on from time to time to lay out. The drawings of this Course, if inked in, should be completed in the manner shown in the illustrations.

**18. Development of Intersected Solids.**—In cases where the parallel lines of a solid are interrupted by the intersection of another solid or by a cutting plane, it becomes important to follow carefully the instructions above given; in such cases it is of extreme importance that an exact development should be made on the drawing board. For examples of the development of such intersected solids, we will refer to the figures illustrating the cutting planes in their effect on the cube, which figures have become familiar to the student from their use in *Practical Projection*. Fig. 15 is a reproduction of one of these projections, showing the development of the parallel surfaces. Here it will be seen that the development can be produced only from the elevation, since the cutting plane has altered the solid in such a manner as to admit of parallel lines being drawn in but one direction.

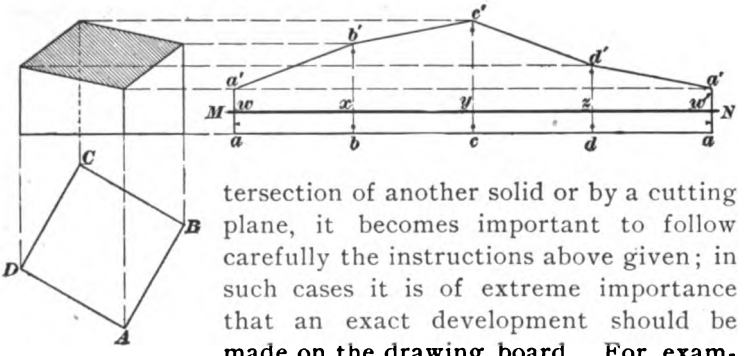


FIG. 15.

The stretchout is drawn as before, and the width of the surfaces spaced off in the usual manner. It will be further

Digitized by Google

noticed that, since the edges of the cube are unequal in length, it becomes more important to observe the order of the surfaces as they are being unrolled from the solid. After the edge lines are drawn in the development, the developers are drawn in the same manner as in Fig. 13, but with this difference: the lower ends of the edge lines are defined by a single developer as before, but it becomes necessary to draw a developer from the upper end of each edge in the elevation to its corresponding edge line in the development. If this is done carefully, it will be seen, from a comparison of the surfaces in the development with those on the solid in the elevation, that they are in the same relative position with reference to one another, although reversed. This is clearly indicated in Fig. 15 by the use of similar capitals and small letters for the corresponding edges and edge lines, respectively, in the projection and development. Thus, the edge line $a\ a'$ represents the edge $A$; $b\ b'$ represents the edge $B$; etc. It will be noticed, also, that those parts of a development that come together and form edges or seams are indicated by the same letters. A similar principle of lettering these drawings will be continued throughout *Development of Surfaces*, since, when once understood by the student, he can study the drawings intelligently and with less reference to the descriptive text.

In this drawing of the cube, another fact is presented that demands care on the part of the draftsman; that is, the outer edge lines in the development must be of the same length. It may seem unnecessary to call attention to a fact so obvious, since it is very clear that, as the outer edge lines represent the same edge of the solid, they *must*, therefore, be of the same length in the development. It is, however, a cause of frequent error, and is due simply to carelessness in drawing the developer to the wrong edge line. Great care must be exercised in this respect, since the accuracy of a development depends in no small degree on this feature.

A development similar to the one given in Fig. 15 is

Digitized by Google

shown in Fig. 16. This development is made from the front elevation of the figure in *Practical Projection* that shows how

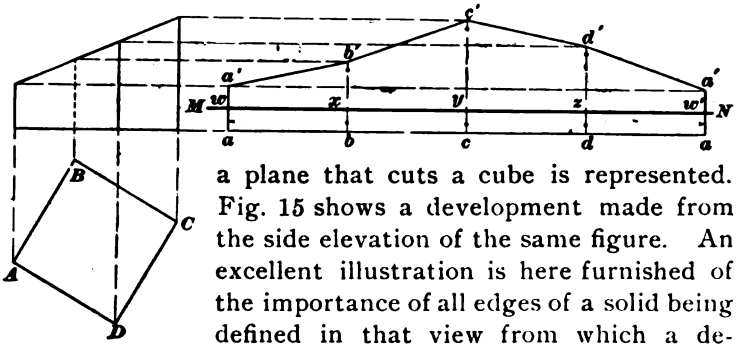


FIG. 16.

a plane that cuts a cube is represented. Fig. 15 shows a development made from the side elevation of the same figure. An excellent illustration is here furnished of the importance of all edges of a solid being defined in that view from which a development is made. The drawing in Fig. 15 represents the cube in such a position that the lengths of all its parallel edges are shown, while in Fig. 16, the length of the edge *B* is seen only by the aid of the dotted line. In drawings of this class, therefore, all edges should be indicated, whether on the side nearest the observer or not. In such drawings, however, it is customary to represent these hidden edges by dotted lines, in order to avoid confusion.

It frequently happens that the cutting plane so intersects the surfaces of a solid as to produce angles at points other than at the vertical edges of the solid. An example of this is found in Fig. 17. The method of obtaining the development is, in the main, similar to that used in the preceding cases. From the plan of the cube in Fig. 17, however, it will be seen that points are indicated on the lines *B C* and *C D* denoting the corners, or points, at the extremities of the line *K L*. The distances *B K* and *D L* must, therefore, be indicated on the stretchout *M N*, as shown at *x k* and *l z*, the points in each case being located from *b b'* and *d d'* toward *c c'*. This is because the points *K* and *L* approach *C* in the plan in their distances from *B* and *D*, respectively; according to the foregoing instruction, it is necessary to define them in a position in the development corresponding to that represented on the solid.

Digitized by Google

Parallel lines must be produced through the points *k* and *l* in the same manner as the edge lines were drawn. In a certain way, these lines serve a similar purpose, since they are the termination of certain developers; but, as it is not

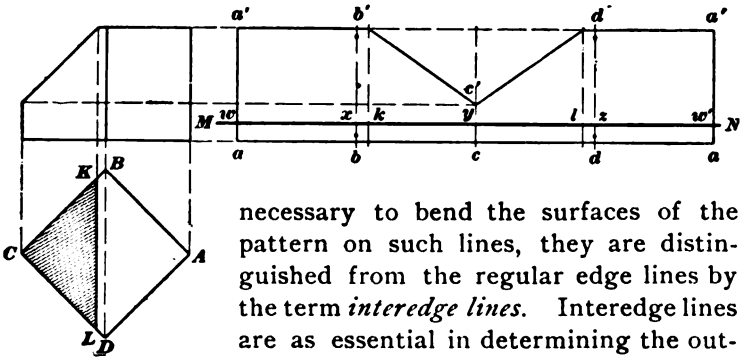


FIG. 17.

necessary to bend the surfaces of the pattern on such lines, they are distinguished from the regular edge lines by the term *interedge lines*. Interedge lines are as essential in determining the outline of a development as the edge lines themselves, and are to be distinguished on the drawings for this Course by the dash-and-double-dot line. A comparison of the projections with the development in Fig. 17, made by looking for similar capitals and small letters in the figure, will enable the student to see clearly the manner in which the additional spaces are located on the stretchout, and also how this development is produced from the elevation.

**19. Importance of Accuracy.**—The attention of the student has frequently been called to the necessity for accuracy in his drawings. If this is necessary in the case of projection drawing, it is doubly important in the case of developments. Too much stress cannot be laid on this very important feature of the patterncutter's training. Unless his drawings are accurate they are of no value; it is, therefore, of the utmost importance that the patterns for any piece of sheet-metal work should be carefully and accurately described. The draftsman may thoroughly understand all the principles involved in projection drawing and the development of surfaces; but if the work on the drawing board has been done in a careless manner, the pattern is as liable to be

Digitized by Google

incorrect as though it had been "guessed at," or "cut and trimmed."

There are few solids whose development may be accomplished by the aid of the limited number of lines required in the case of the cube. The same principles, however, govern all solids of this class, and it is necessary merely to be careful and observe the form of the solid as it is shown in the projection drawing. The fact that the drawing contains many lines should not deter the student from recognizing each surface independently of the others, although it may require more care on his part to select the correct lines in each case.

**20. The Imagination a Great Help.**—The student's imagination will be found to be his best assistant in this work, and by the aid of the projections he should picture to himself a model of the object represented. Further, he will find it a valuable help in being able to imagine the surfaces as they would appear if a covering of the solid were unrolled and spread out on the drawing board for the development. In this way, the corresponding surfaces on the solid and in the development may be compared, and the student may be able to detect any errors that might otherwise escape him.

---

### GENERAL RULES FOR OBTAINING PARALLEL DEVELOPMENTS.

**21.** For the convenience of the student, and to aid him in the production of developments of solids by means of parallel lines, a general summary of the important features is here presented. This summary contains the substance of the foregoing instruction.

1. A projection must first be drawn, consisting of a plan and elevation, showing the solid in a right position.

2. The development is always obtained from that view in which the parallel lines are shown in their true lengths.

3. The stretchout is drawn at right angles to the parallel lines of the solid.

Digitized by Google

Digitized by Google

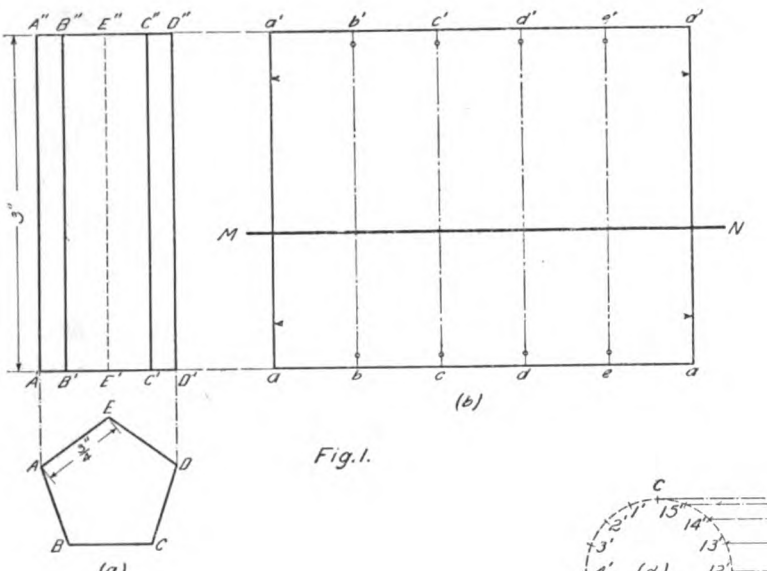


Fig. 1.

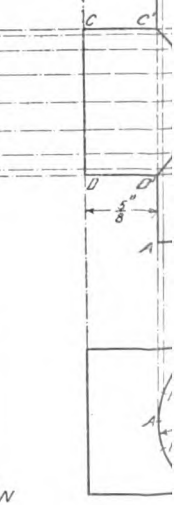


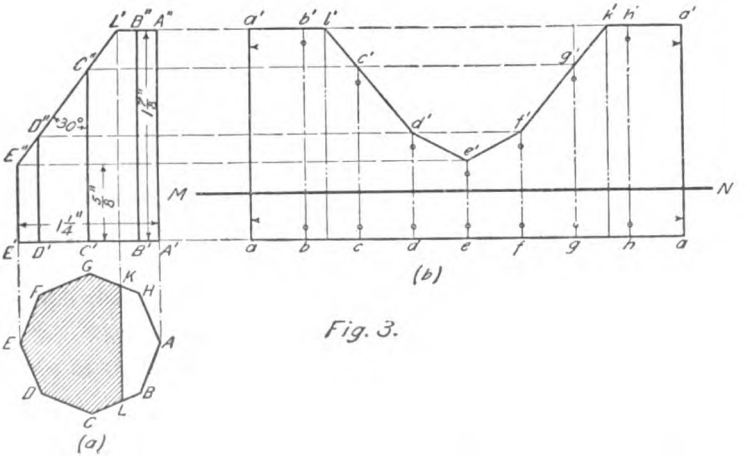


Fig. 3.



Copyright, 1899, by THE CO
All right
Digitized by Google

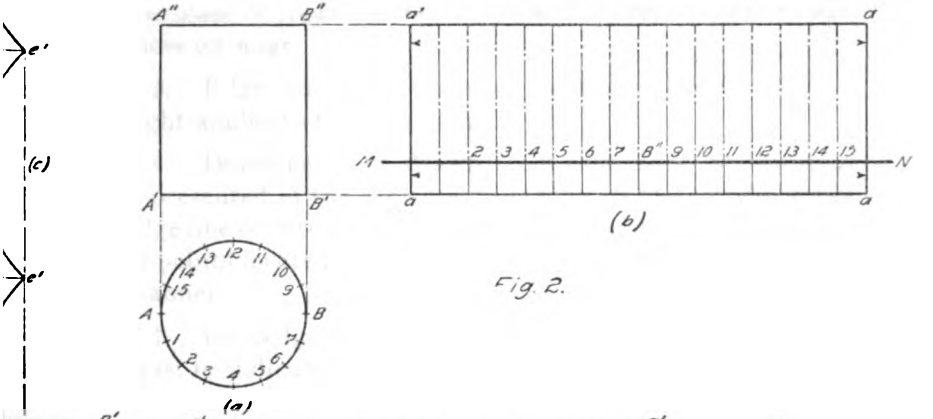


Fig. 2.

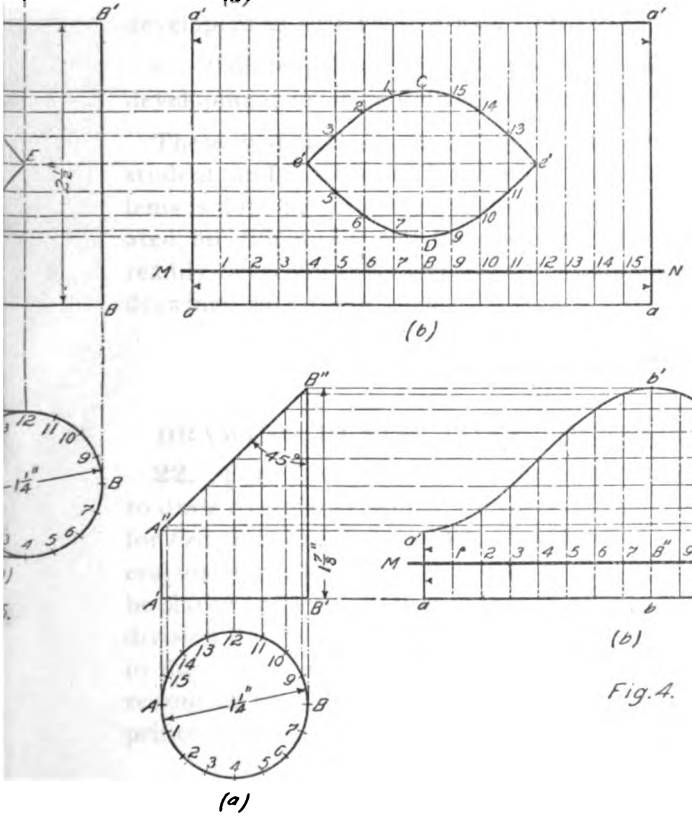


Fig. 4.



eserved.

Digitized by Google

Digitized by Google

4. To indicate the width and relative position of the surfaces, points are located on the stretchout corresponding to the place of those points in a view that represents the surfaces on edge.

5. Edge lines and interedge lines are always drawn at right angles to the stretchout.

6. Developers are drawn from each edge or interedge represented in the projection drawing to the corresponding edge line or interedge line in the development. The position of points located on these lines is determined in a similar manner.

7. Interedge lines, when necessary for the development, must be indicated on the projection as well as on the development, and the same care exercised with the corresponding developers as with those drawn from edges to edge lines.

8. The length of the outer edge lines in a complete development must be defined by the same developers.

These instructions should be carefully observed by the student, and if the work involved in the accompanying problems is done in accordance with the principles just enumerated, no difficulties will be encountered that may not be readily overcome by careful study and a comparison of the drawings with these rules.

---

**DRAWING PLATE, TITLE: DEVELOPMENTS I.**

**22.** For *Development of Surfaces* the student is required to draw five plates, which are the same size as those drawn for *Practical Projection* and in accordance with the same general instructions. The titles of the plates are given, and are to be placed and lettered in the same manner as heretofore. The division lines between the problems are to be omitted, and, in their place, a general arrangement is to be followed which resembles the reduced copies of the drawings shown on the printed plates. The problems should first be drawn on



Digitized by Google

separate paper to the given sizes. The developments may then be drawn in such positions on the plates as to present an appearance similar to that of the reduced copies.

These problems consist mainly of developments of solids whose projection occupied the attention of the student in the study of *Practical Projection*. They have been selected for this purpose because they are representative solids whose development affords an illustration of the principles involved in patterncutting. The student that desires to pursue the study at greater length may find convenient illustrations in other objects of frequent occurrence. Desirable practice may thus be obtained, and the practical application of the principles outlined will serve to fix them more definitely in the student's mind. No insurmountable difficulties are likely to be encountered in developments thus undertaken. Additional work of this kind should be of the same class as the developments explained in the text.

---

PROBLEM 1.

**23. To develop the surfaces of a pentagonal prism.**

A perspective view of the prism is presented in Fig. 18. The drawing is to be made on the plate to the size indicated by the dimension figures there given. The completed development is shown at Fig. 1 (*a*) and (*b*) on the plate. First draw the plan in the position shown and then the elevation, according to the given sizes. Next, draw the stretchout *M N*, spacing off on its length, as previously instructed, the width of the surfaces; after this the edge lines are drawn, and finally the developers. As before, indicate the edge lines, and finish this and all drawings in the manner described in Arts. **16** to **18.**

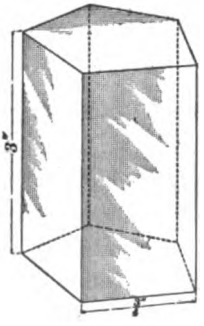

FIG. 18.

Digitized by Google

PROBLEM 2.

**24. To develop the curved surface of a cylinder.**

EXPLANATION.—No perspective figure is given for this problem, the cylinder being 1¼ inches in diameter and 1¼ inches high. Since there are no parallel edges presented on the curved surface of the cylinder, it is necessary to assume them. When edges are thus assumed for the curved surface of any solid, the corresponding edge lines in the development are represented in the same manner as for the prism. It is unnecessary, however, to designate assumed edge lines by small circles, since there is no angular bending on such lines when the surface is formed to the shape indicated in the projections.

When it becomes necessary, on account of the intersection of another solid or plane with the cylinder, to represent intermediate lines, they are then treated as interedge lines, the same as for the prism. Edge lines and interedge lines, therefore, bear the same relation to the development of curved surfaces as to plane surfaces. But it is necessary to exercise more care in the development of curved surfaces, since these lines are not so readily distinguished from one another as in the case of prisms. Indicators may be marked on the outer edge lines; but, since the others are assumed merely for the purposes of development, the small circular indicators are omitted. In the case of a regular cylinder, as in this problem, it is unnecessary to project the edge lines to the elevation, and this work may be omitted in the construction of the problem on the plate.

CONSTRUCTION.—Draw first the plan and elevation shown on the plate at Fig. 2 (*a*), giving the figure the required dimensions. Next, divide the outline in the plan into a convenient number of equal spaces (in this case 16). Draw the stretchout *M N* as heretofore, and lay off on this line an equal number of spaces similar to those on the plan of the cylinder; draw the edge lines as shown, and complete the development by drawing the two necessary developers from the elevation. Then finish the drawing in the usual manner, as shown at Fig. 2 (*b*).

Digitized by Google

PROBLEM 3.

**25. To develop the surfaces of an intersected octagonal prism.**

Fig. 19 is a perspective view of the prism projected in *Practical Projection* in order to show an octagonal prism cut by a plane; the dimensions of the figure, however, are slightly changed, as may be seen from the plate. The drawing of the projections is similar to that in the problem referred to, and may be completed as shown on the plate at Fig. 3 (*a*). This problem requires interedge lines, as in the case of the cube in Fig. 17; more developers, too, are needed than are used for preceding problems. Aside from these features, the drawing does not differ materially from those that have preceded it. After developing the stretchout, as in previous problems, and drawing the edge lines and interedge lines at right angles to the stretchout, developers are drawn from the several points indicated in the elevation; viz., $E''$, $D''$, $C''$, etc., as shown. Care must be used to terminate each developer on the line corresponding to each edge or interedge, as the case may be.

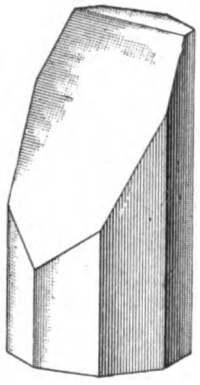

FIG. 19.

After this development is completed, the student may derive some assistance by cutting out a paper model according to the lines indicated and bending it to conform to the octagonal prism; he should then understand exactly what is implied by the operations that have been explained.

---

PROBLEM 4.

**26. To develop the curved surface of an intersected cylinder.**

Fig. 20 is a perspective drawing of the intersected cylinder required for this development; the dimensions in Fig. 4 on the plate indicate the size the drawing must appear thereon. This problem is very similar to Problem 2, the only difference

Digitized by Google

being that it is necessary to project the edge lines to the elevation in order to obtain the points of their intersection with the cutting plane. From these points developers are drawn to their corresponding edge lines in the development. The curve traced through points of intersection in that portion of the drawing is the upper outline of the development. This drawing being fully shown on the plate at Fig. 4 (*a*) and (*b*), the student should have no difficulty in completing the problem. Since the cutting plane in this problem is at an angle of 45°, the development may be used as a pattern for a two-pieced elbow. More attention will be directed to the methods of obtaining elbow developments in a later part of this Course, but the principles are the same as are shown in this problem.

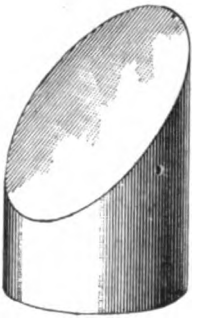

FIG. 20.

---

PROBLEM 5.

**27. To develop the surfaces of two intersecting cylinders.**

EXPLANATION.—Fig. 21 is a perspective view of intersecting cylinders. Since the two cylinders are of the same diameter, their axes intersecting, the lines of intersection are represented on the drawing by straight lines.

CONSTRUCTION.—The projections shown on the plate at Fig. 5 (*a*), are first completed, and an end view of the shorter cylinder projected as shown at (*d*). The outline of each cylinder in that view in which it is represented as on edge is then divided into a similar number of equal spaces (16 in Fig. 5). The points thus located for the purpose of representing the assumed edges are then projected from each view to the elevation. Stretch-outs $MN$ and $M'N'$ are then developed, and edge lines are drawn perpendicular to

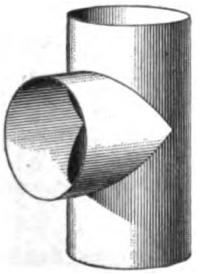

FIG. 21.

Digitized by Google

the stretchout in each development. Developers may now be drawn from the ends of all assumed edges in the elevation to their corresponding edge lines in the developments. Note that, in the development of the vertical cylinder, the outline of the intersection of the horizontal cylinder is projected to any set of edge lines desired, the position of the outline of the opening being optional with the draftsman.

The development of the intersecting cylinder could be drawn from either the plan or the elevation in this case, since the true length of the parallel lines of that solid is shown in either view; for the sake of the appearance of the drawing, it is developed from the elevation. The development of the intersected solid is here shown to be a parallelogram having an irregularly curved portion outlined in the central part of the figure. It may be seen that the plan of the cylinders is not absolutely necessary for this development, since the edge lines from each circle intersect in the same points on the line of intersection of the two cylinders. In the practical work of such developments, therefore, one of the full views may hereafter be omitted.

**28. Recapitulation.** — These five problems are to be copied on the plate in the relative positions indicated on the printed copy. Care should be exercised that the figures when completed occupy central positions on the plate, and an equal distance should be left on all sides of the drawing. The plate will then present a neat appearance, and the developments may be easily distinguished from one another. When finishing these drawings on the plate, the various features are to be represented as follows:

Represent the boundaries of figures and all visible parts of solids by light full lines. ———————————

Hidden edges and hidden intersection lines should be represented by light dotted lines. - - - - - - - - - - - - - -

Projectors, as heretofore, are to be indicated by dot-and-dash lines. —— · —— · —— · —— · —— · —— · ——

Edge lines are indicated by dot-and-dash lines, used also for projectors.

Digitized by Google

Interedge lines are indicated by dash-and-double-dot lines. —— ·· —— ·· —— ·· —— ·· —— ·· ——

Represent developers by broken lines. — — — — — —

Represent the stretchouts by heavy full lines. ————

## DRAWING PLATE, TITLE: DEVELOPMENTS II.

### PROBLEM 6.

**29. To develop the surfaces of two intersecting prisms.**

The prisms developed in this problem are the octagonal and quadrangular solids whose projection was given in *Practical Projection* in order to show views of intersecting prisms.

CONSTRUCTION. — The development of Case I of that problem is shown in Fig. 22. Note that interedge lines are required for the development of both solids, their positions being found by projectors drawn from the different views of the drawing to the full view of the end, as shown in Fig. 22.

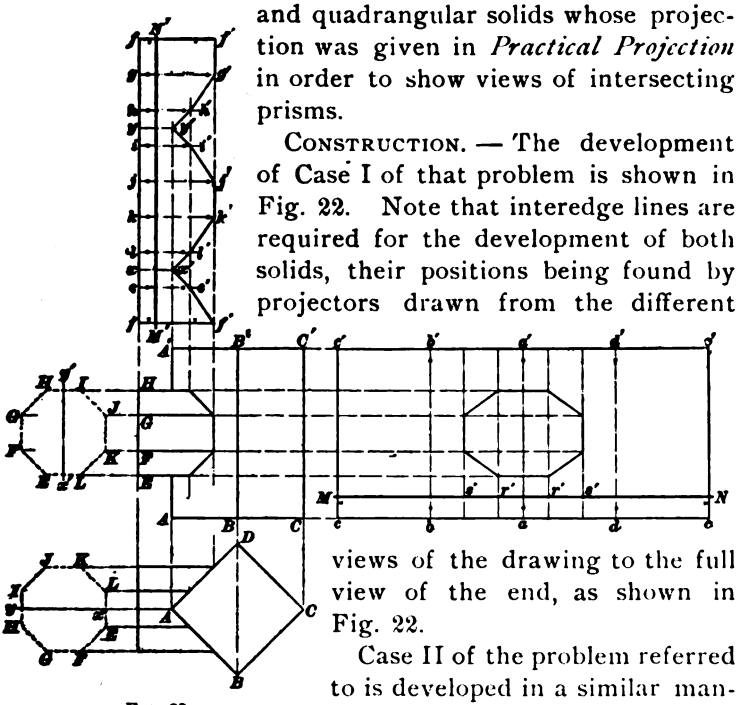

FIG. 22.

Case II of the problem referred to is developed in a similar manner. A drawing of the latter will form the first development for this plate, and the projections are accordingly reproduced as shown at Fig. 1 (*a*) of this

Digitized by Google

plate. In order to avoid confusion of lines, projectors are sometimes drawn as shown on this plate; that is, only their starting points are indicated, as between the two views of the octagonal prism in this drawing. Next, develop the stretchouts for the two solids, as at $MN$ and $M'N'$, and draw edge and interedge lines through their respective points. The positions of the interedge lines are found by projecting the point $A$, in the plan, across to the full view, as shown at $(d)$, afterwards locating the points $x$ and $y$ at $x'$ and $y'$ in $(d')$; thence, they are projected to the elevation and carried to the development in the usual manner, the resulting figures at $(b)$ and $(c)$ completing the development of the solids.

The development of Case III of the problem in *Practical Projection* forms the second part of this problem. These projections are reproduced in Fig. 2 on the plate at $(a)$. In this case, the axes of the solids do not coincide, and the problem has an appearance of greater complication than the drawing in Fig. 1. It is necessary to trace out the line of intersection very carefully, and, if this is done, the drawing of the remainder of the problem will be comparatively easy. The interedge lines are determined in the same manner and are shown on the plate by similar letters. The method of procedure is precisely the same as already explained, the resulting developments at $(b)$ and $(c)$ completing the problem.

In drawings of this class, the student will perceive that the true length of the parallel lines is found by projection drawing. The application of the rules found under the heading "General Rules for Obtaining Parallel Developments" is then sufficient for the development of any solid; and, if this application is carefully made, the student will meet with no obstacles that may not be readily overcome.

**30. Development of Intricate Solids.**—In the process of developing intricately formed solids, it becomes necessary to exercise diligence and caution in the observance of the regular order of unrolling the surfaces on the stretchout,

Digitized by Google

Digitized by Google

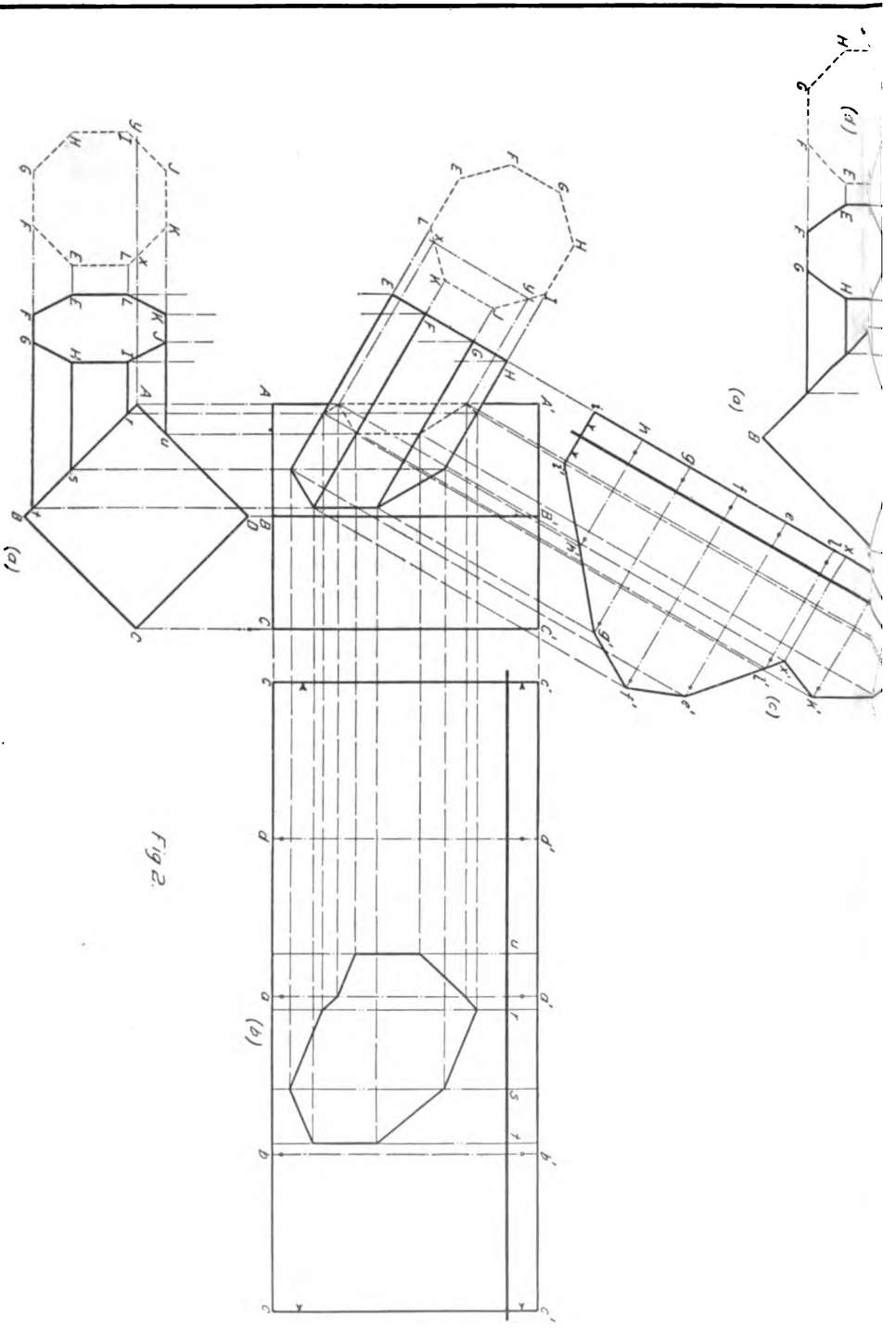

Fig 2.



Copyright, 1893, by THE CO

All rights

Digitized by Google

# DEVELOPMENTS-II.

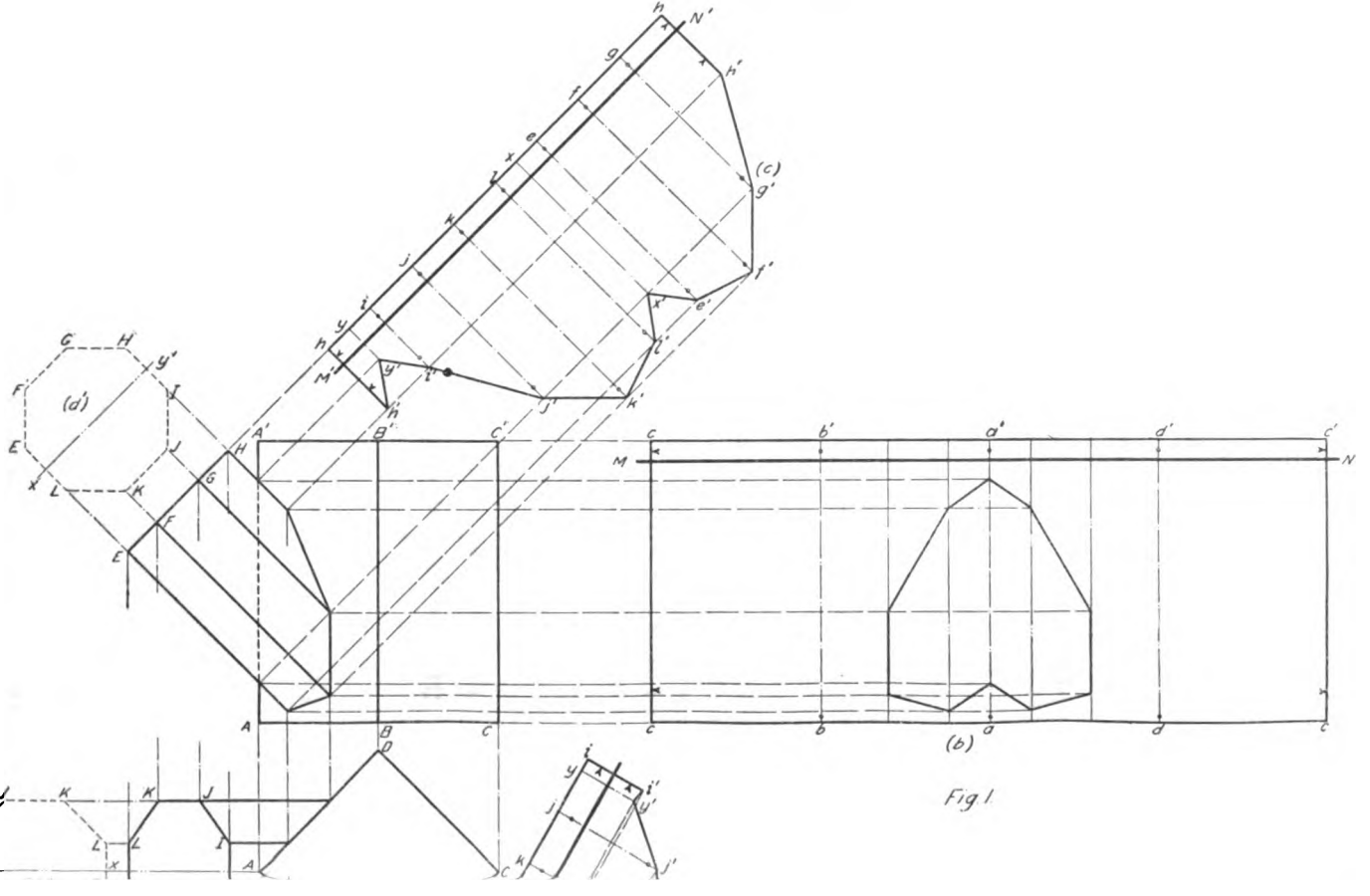


Fig 1.

JOHN SMITH, CLASS № 4529.
LIERY ENGINEER COMPANY.
reserved.
Digitized by Google

REESE LIBRARY
OF THE
UNIVERSITY
OF
CALIFORNIA

Digitized by Google

and carefully to draw the developers to their corresponing edge lines in the development. Note that in order to obtain the outline of the development for the intersecting solid at Fig. 2 (*c*), a separate developer is required in the case of each edge or interedge of the solid.

---

**DRAWING PLATE, TITLE: DEVELOPMENTS III.**

---

PROBLEM 7.

**31. To develop cylinders that intersect irregularly.**

This problem is a development of the cylinders projected in *Practical Projection*, to show views of intersecting cylinders of unequal diameters.

CONSTRUCTION.—The principles are the same as those governing previous developments, but since many lines are required for the drawing, the student should carefully follow the directions in the order stated. Draw, first, the projections as at Fig. 1 (*a*) of this plate, and carefully indicate the line of intersection of the two solids. The development of the smaller cylinder is then made. Space the outline of the full view as at (*b*) and (*b'*), using 16 spaces; number these points in a corresponding manner, as shown, and project them to their adjacent views. Designate the intersections in the different views by similar numbers, to avoid confusion. Develop the stretchout *M N* in the usual way; draw edge lines and, afterwards, developers, as shown on the plate. The development at (*c*) is thus completed, the irregular outline there shown being the pattern for the surface of the smaller cylinder. This part of the work may be completed without reference to the larger cylinder. In fact, it may be considered as a separate drawing, and the student should take no notice of any other lines on the drawing except those pertaining to the smaller solid. In this way he will accustom himself to working on drawings that overlap one another.

Digitized by Google

A saving of the draftsman's time is often effected by thus making developments over other portions of the drawing, for if this were not done, a separate projection would be required for each development. The large number of lines on the drawing is, however, apt to be confusing to the beginner, and is frequently a cause of error when the drawing is transferred to the metal. Unusual care must therefore be taken in such cases.

The development of the smaller cylinder being completed, attention is directed to the larger solid. It is evident that the outline of the development of the larger cylinder will be a parallelogram having an irregularly outlined portion in some part of the figure. Reference to the plan indicates that the edges assumed for the smaller cylinder intersect the surface of the larger at *9*, *10*, *11*, *12*, *13*, *14*, *15*, *16*, and *1*, the total distance from *9* to *1* being one-quarter of the length of its outline. These points may now be assumed as the edges for that portion of the surface of the larger cylinder, the remainder being spaced off in the usual manner, as *A*, *B*, *C*, etc. Any convenient point on the outline may be taken as the starting place for the stretchout, the extreme upper point of the plan at *A* being selected in this case. Since the intersections occur only on the assumed edges that are indicated by the *numbered* points, the drawing of the edge lines in the development may be omitted through the *lettered* points, the outer edge lines alone being necessary to define the size of the parallelogram. Developers are then drawn from the same points of intersection in the elevation used for the development of the smaller cylinder, care being exercised that they extend to their corresponding edge lines in the development of the larger cylinder, as shown on the plate at Fig. 1 (*d*).*

* It will be noted during the drawing of this development that the stretchouts of these cylinders are measured as chord distances. The lengths in (*d*) for the large cylinder, therefore, will be slightly different as measured from *a* to *1* when comparison is made with the length *1* to *9*, and, correspondingly, from *A* to *H*. The student should understand that in actual shop practice these chord distances are equally spaced in all quadrants in order to overcome this difficulty. The difference is, however, so slight in this drawing that no allowance is necessary.

Digitized by Google

PROBLEM 8.

**32. To develop an octagonal prism and an intersecting cylinder.**

EXPLANATION.—The projections given in *Practical Projection* to show views of a prism intersected by a cylinder, are redrawn for this problem. The development of the cylinder is very similar to that of the smaller cylinder in the preceding problem, as shown at Fig. 2 (*c*). Note that the edges *1* and *9*, assumed on the surface of the cylinder, coincide with the edge *C* of the prism; this simplifies the development, and the student will have no difficulty in completing the work at (*c*), it being similar to that described in the preceding problem.

CONSTRUCTION.—Since the development of one-half of the prism will serve to illustrate the principles of this problem, four sides only need be laid out on the stretchout. In this case, the edge lines are to be drawn and indicated as such, in order that the distinction between them and the inter-edge lines may be clearly marked, in accordance with the instructions given under the heading "Development by Parallel Lines." After developing the stretchout as shown at (*d*), the completion of the development is made in the same manner as heretofore.

---

PROBLEM 9.

**33. To develop the surfaces of a cylinder intersecting a sphere.**

EXPLANATION.—The projections of the sphere intersected by a cylinder that were drawn for *Practical Projection* are here reproduced at Fig. 3 (*a*) on the plate, but to a smaller scale. This problem introduces no new element in the development of solids by parallel lines. It is given a place in this instruction merely to show the student that, while the task of finding the line of intersection of parallel-lined solids with solids of other classes may depend on various principles of projection drawing, their development after this line has

Digitized by Google

been produced is the same in all cases. After the completion of the projections, the outline of the cylinder, as shown in the plan, is divided into spaces by locating a convenient number of points; this number is always optional with the draftsman, it being customary to take as many as are required for accurate development; for, of course, the more points there are, the greater will be the accuracy.

CONSTRUCTION.—In this case, as in the case of all symmetrical solids, it is necessary to locate points on but one-half of the outline, since their projectors, if produced, will fix corresponding points on the remaining portion of the outline. The assumed edges are then projected to the elevation and their intersections with the sphere carried by developers to the development at ($b$). A similar development may be completed at ($b'$) by producing the edge lines to that figure and drawing developers as shown, completing the problem.

The stretchout line has been prominently used in these problems. In many cases it may be convenient to develop the stretchout on one of the lines used for developers, thus avoiding an additional line on the drawing. Generally, in sheet-metal work, it will be found preferable to give the stretchout line the same prominence as in these problems, for reasons that will be apparent in the student's later work.

---

## DEVELOPMENT BY RADIAL LINES.

**34. Relation of the Pyramid to the Cone.**—We now come to the second general division of those solids whose development may be accurately accomplished—that is, solids developed on *radial lines*. It is here proposed to show the relation borne by the pyramid to the cone, since the methods of development of both solids are similar. In the development of the cylinder, its curved outline was divided by points into a number of equal parts. These points in the plan were then projected to the elevation and there considered as assumed edges; in other words, the

Digitized by Google

Digitized by Google

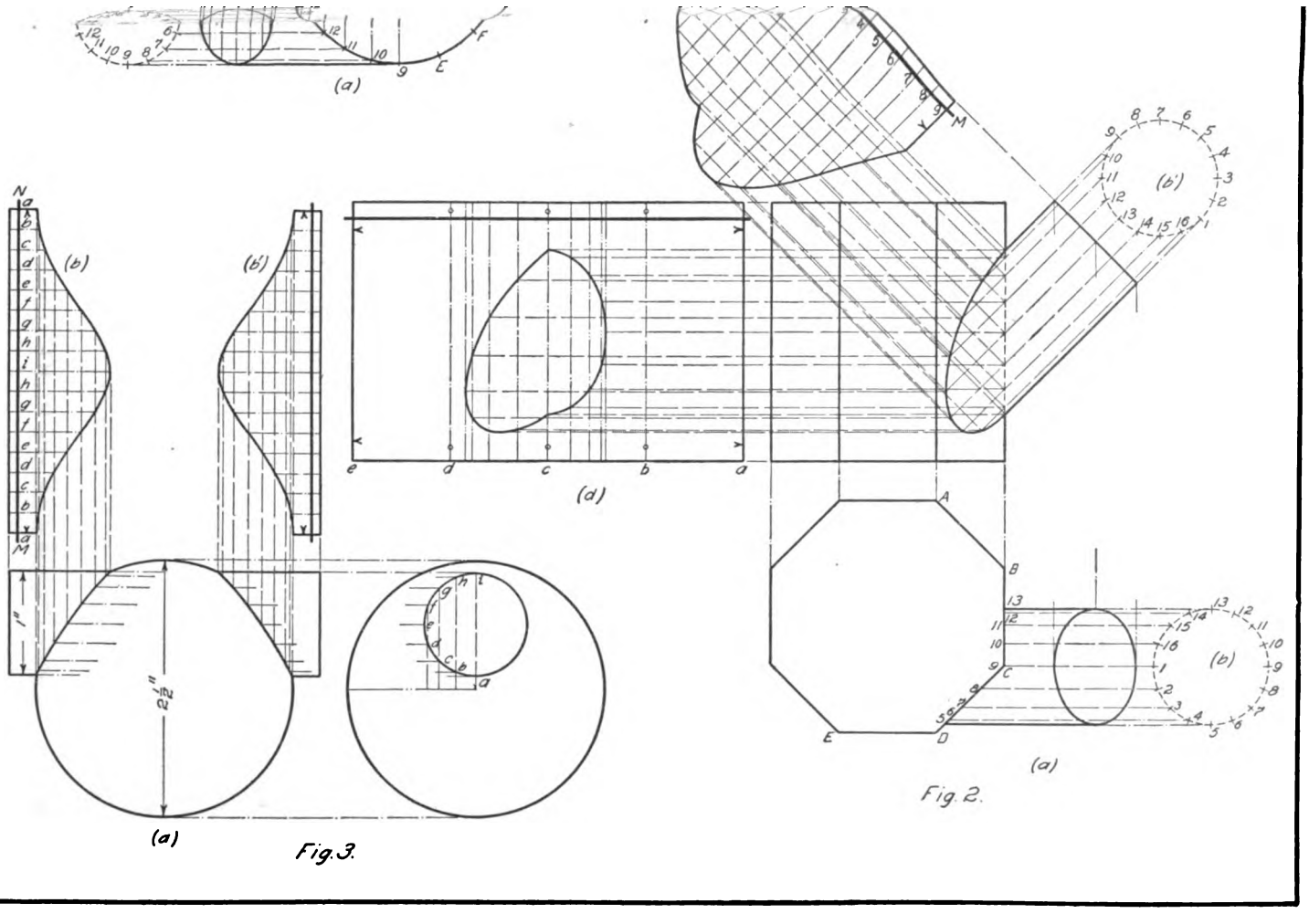


Fig. 3.

Fig. 2.

Copyright, 1893, by THE CO
All rights
Digitized by Google

# DEVELOPMENTS-III.

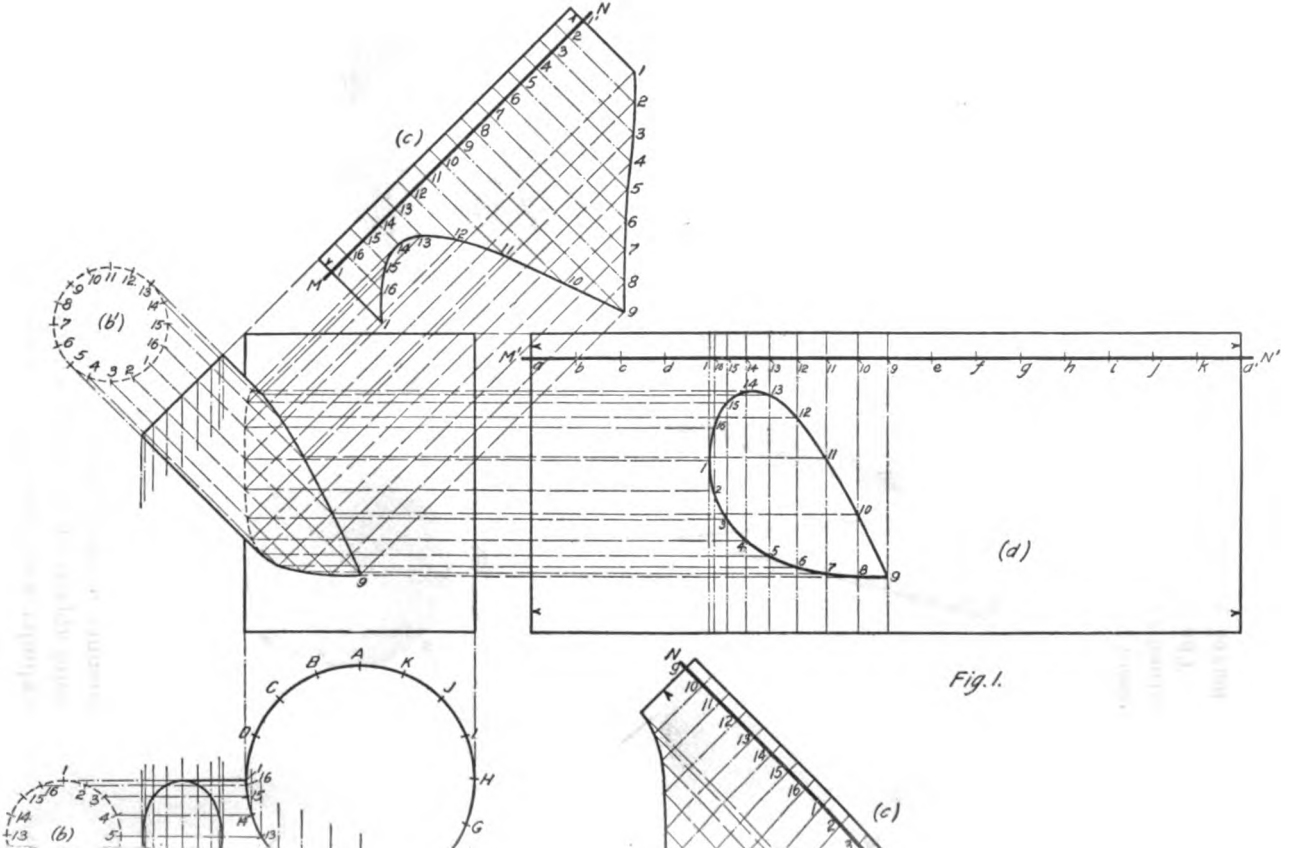


Fig. 1.

JOHN SMITH, CLASS № 4529.

...IERY ENGINEER COMPANY.

...reserved.

Digitized by Google

Digitized by Google

cylinder was treated as a many-sided polygonal solid, this solid appearing inscribed within the cylinder. In a similar manner we shall now consider the pyramid as an inscribed

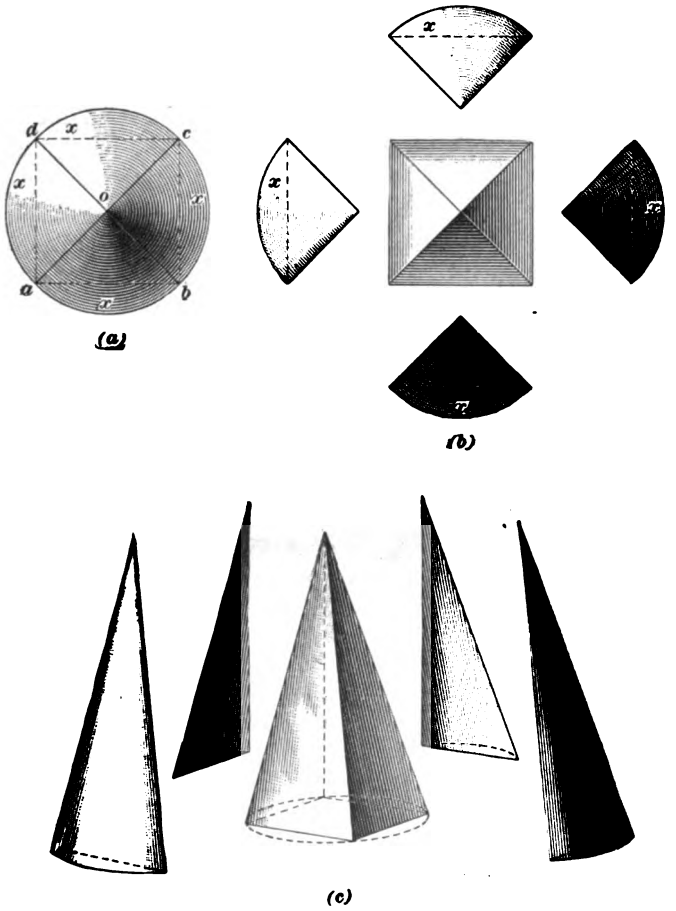


FIG. 23.

solid in its relation to the cone. This may be better understood by reference to Fig. 23 (*a*), (*b*), and (*c*).

The removal from the cone at (*a*) of the pieces marked *x*, leaves a solid that may be recognized as a quadrangular

Digitized by Google

pyramid—better shown at (*b*), the pieces being removed and shown in an adjacent position. The illustration at (*c*) is a perspective elevation of the parts shown at (*a*) and (*b*), and is introduced for the purpose of showing the relation between the cone and the pyramid to better advantage. Comparing these two solids in the figure, it will be seen that the edges of the pyramid at (*b*) correspond to certain elements of the cone at (*a*). Further, it will be seen that, if the cone is covered with paper, as in Fig. 24, and the position of the elements noted, the paper afterwards being unrolled as shown, the elements may be imagined as leaving their imprint on the paper, as at *o a*, *o b*, etc., Fig. 24. The position of these imprints will correspond relatively to the location of the elements on the surface of the solid. A figure

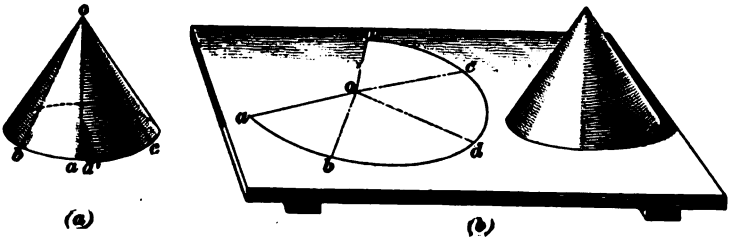


FIG. 24.

similar to the unrolled covering may be described by the aid of the dividers, the boundaries of the development being defined by the position of any element chosen at pleasure, notice being taken of the first and last contact of such element with the drawing during a single revolution of the cone. The *radius* of the arc thus described is always equal to the true length of an element, while its *length* is equal to the circumference of the base of the cone.

Suppose, now, that the surface of the pyramid shown at Fig. 23 (*b*) is covered in a similar manner, the covering being afterwards unrolled as shown in Fig. 25. It will be found that an arc described with a radius equal to that used for the development of the cone in Fig. 24—that is, equal to the true length of an edge of the pyramid—will pass

Digitized by Google

through the points $a$, $b$, $c$, $d$, and $a'$, representing the lower extremities of the upright edges of the pyramid. These points are equally distant from one another as measured on the arc. This may be proved by setting the dividers at a distance equal to the length of a base edge of the pyramid

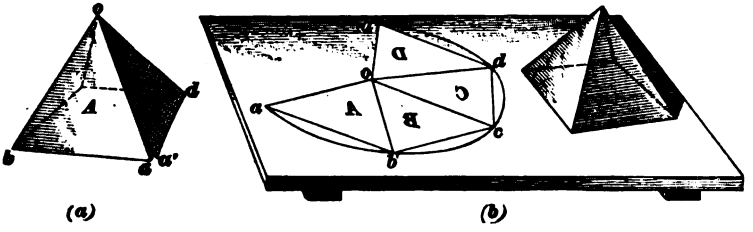


FIG. 25.

and stepping off the spaces on the arc. The only difference between the developments for these two solids lies in the fact that, for the *cone*, the development is defined by the circular arc, while in the case of the *pyramid*, straight lines are drawn between the points $a$, $b$, $c$, etc., as shown in Fig. 25. These developments will be completed in a later problem.

**35. Stretchouts for Radial Solids.**—Since the distance around the bases of the cone and the pyramid may be measured on an arc whose radius is equal to the length of one of the elements of the cone (or, in the case of the pyramid, to the length of one of its upright edges), such an arc may be described for the stretchout of these solids. The measurement around the solid being taken on a particular line, or base plane, it may here be observed that any real or assumed base plane of a cone or pyramid may be treated in a similar manner. The length of the radius by which the stretchout is described must, in all cases, be equal to the true length of the elements in that portion of the solid.

This is illustrated in Fig. 26, the cone $O\,A\,B$ being developed along a stretchout described with the radius $O\,B$. An assumed base may be taken at $C\,D$; an arc is then described

Digitized by Google

from the center $O$ with the radius $O\,D$ ($O\,D$ being the true length of the elements of the cone $O\,C\,D$). If the width of a space between the elements on the assumed base $C\,D$ (measured on the plan) is taken in the dividers and spaced off on the arc $D\,F$, the spaces will be found to coincide with the intersection of the elements in the development drawn from the arc $B\,E$. The same will be found true for any right base that may be assumed for the cone. As a matter of precaution, it is customary, when drawing developments of the radial solids, to describe the stretchout with as long a radius as possible, usually not exceeding the length of the elements or edges shown in the drawing. For reasons that will be shown during the construction of the problems, it is convenient to locate the center for describing the stretchout at the vertex of the solid.

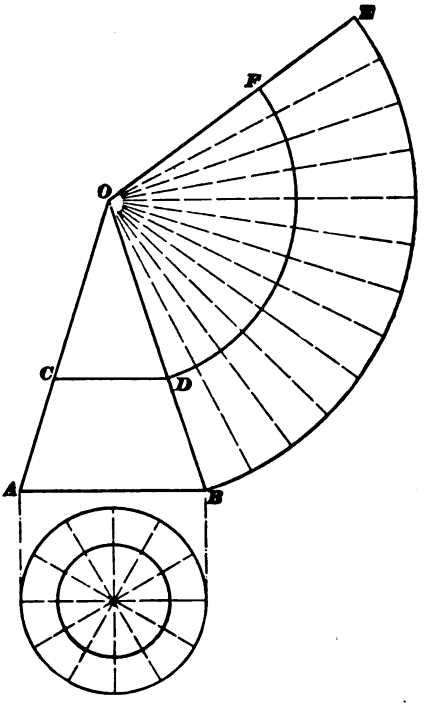


FIG. 26.

**36. Revolution of Radial Solids.**—During the study of projection drawing, it was learned that measurements for all distances and the position of points on the surfaces of cones and pyramids—radial solids—are determined by means of their radial lines, or elements. The same principle must be adhered to when developments of such solids are produced. It is essential, therefore, that these lines

Digitized by Google

should be shown in their true lengths on drawings from which such developments are produced. This will necessitate much work on the part of the draftsman, especially if the surfaces are in any way irregular or are intersected by other solids. To overcome the necessity for drawing a number of views, advantage is taken of a principle that may be observed during the revolution of the solid. This revolution is effected in a very simple way on the drawing board, and an illustration of the method used is furnished in Fig. 27. The student will understand, from an inspection of that figure, that if the cone $O\,A\,B$ is revolved on its axis in the direction of the arrow, the motion of any point on its surface will be indicated on the elevation by a horizontal line. When any elements of the cone are in the positions occupied by the elements $O\,A$ and $O\,B$, their true lengths are shown on the elevation, and measurements may, therefore, be taken from such lines or from any points located on these lines. Lines in this position may be called *true edge lines*, their use under this name being peculiar to the radial solids.

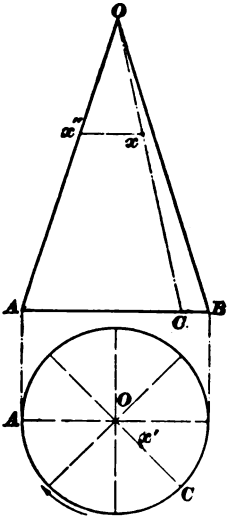

FIG. 27.

When developing the surfaces of pyramids shown in certain positions, it is sometimes necessary to draw this true edge line independently of the figure. A problem illustrating this principle is given on the following plate. Since the elements of a cone are equal in length, the position of any point that may be located on any of these elements (as $x$, located on the element $O\,C$, Fig. 27) may be projected in a horizontal direction to the true edge line at $x''$, and its correct distance from the vertex $O$ be there ascertained. The point $x$, therefore, could be projected to either element $O\,A$ or $O\,B$, but the supposed revolution is generally represented as being made toward the true edge line that is nearest the point



Digitized by Google

whose location it is desired to determine, although in Fig. 27 the point $x$ is moved in the opposite direction. Thus, in Fig. 27, if it is desired to determine the exact distance of the point $x$ from the vertex $O$, the horizontal line $x x'$ is drawn in the elevation, and the distance from the point $O$ to the point $x'$ is then the exact, or true, distance between the two points. The same result would be obtained if an elevation were drawn showing the element $O C$ in its true length; but, as seen from the foregoing explanation, the method here explained is much shorter and better adapted to the wants of the draftsman.

**37. Use of Construction Lines.**—In the development of radial solids, the same construction lines are used as in obtaining the developments for parallel solids, although in a slightly different manner. Since the stretchout line has been shown in its adaptation to the development of these solids, it may be represented in a similar manner on the drawings. Developers also are indicated by the same kind of broken lines used in the preceding class, but, like the stretchout, they are described in the form of arcs, and must be produced from an element or edge that is shown in its true length. In a similar manner, these developers are drawn to the development, arcs being described extending from points on edges or interedges, as the case may be, to their corresponding edge lines or interedge lines in the development. When edge lines and interedge lines occur, they converge to a point, and are the radial lines by which this class of solids is distinguished. Such edges and interedges are represented by lines similar to those used for the same purpose in parallel developments, and refer to the same corresponding portions of the solid.

---

### GENERAL RULES FOR OBTAINING RADIAL DEVELOPMENTS.

**38.** A slight modification of the rules for obtaining developments on parallel lines is here applied to the development of radial solids. In connection with the foregoing

Digitized by Google

instruction, a comparison of the two sets of rules will enable the student to understand the principles by which these developments may be accomplished.

1. A projection must first be drawn, consisting of a plan and elevation and showing the solid in a right position.

2. The development is always obtained from that view in which the axis of the solid is shown in its true length (since the revolution of the solid may not readily be shown in any other view).

3. The stretchout is described with a radius equal to the length of the true edge of the solid. Its center may be conveniently located at the vertex.

4. To indicate the width and relative position of the surfaces, points are located on the stretchout corresponding to the position of those points on the outline of a sectional or base view. This view must be taken at right angles to the axis of the solid, the distance from the vertex being determined by the length of the true edge lines in the elevation.

5. Edge lines and interedge lines are always radii of the stretchout arc.

6. Points located on the surface of the solid must be projected to the true edge line by projectors drawn at right angles to the axis.

7. Developers are described with radii equal to the distances on a true edge line from the vertex to the points projected to such edge line. Each developer extends thence to its corresponding edge line or interedge line in the development.

8. Interedge lines, when necessary for the development, must be indicated on the projection as well as on the development. Points located on such lines are projected to the true edge lines and thence developed in the usual manner.

9. The lengths of the outer edge lines in a complete development of a solid must be defined by the same developers.

The application of these rules will be made apparent to the student in the construction of the following problems, which involve the development of radial solids.

Digitized by Google

**DRAWING PLATE, TITLE: DEVELOPMENTS IV.**

---

PROBLEM 10.

**39. To develop the surface of a cone.**

CONSTRUCTION.—Draw a plan and an elevation of the cone, as shown at Fig. 1 on the plate. The cone is there shown in a right position, the dimensions being $1\frac{1}{2}$ inches in diameter at the base and 2 inches high. The true length of its axis is shown in the elevation, and the development is therefore made from that view. Divide the outline of the base in the plan into a convenient number of equal parts (in this case 12); from the vertex $O'$ of the cone as a center, describe the stretchout arc $B'$ $a'$ with a radius equal to the true length of the elements of the cone (that is, the distance $O'$ $B'$ in the elevation). With the dividers, take the length of one of the equal spaces in the plan, and, starting at a convenient point on the stretchout, as at $a$, step off spaces equal in number to those on the plan, thereby making the length of the stretchout equal to the circumference of the base of the cone. From each of the points thus located on the stretchout, an edge line may be drawn to the vertex $O'$; but since there are no points on the surface of the cone that it is desirable to locate in this instance, only the outer edge lines $a$ $O'$ and $a'$ $O'$ need be inked in on the drawing. These lines are to be further indicated by means of the small arrowheads (as in the case of parallel solids) illustrated on the plate in Fig. 1. This completes the development.

---

PROBLEM 11.

**40. To develop the surfaces of a quadrangular pyramid.**

CONSTRUCTION.—This development is shown on the plate at Fig. 2, the right plan and elevation being first drawn according to the dimensions given in the figure. It will be seen that the true length of the edge is shown in the

Digitized by Google

elevation; the stretchout may, therefore, be described as in the case of the cone in the preceding problem. After setting the dividers to the width of one of the base edges shown in the plan at *A B*, Fig. 2, begin at *a* and step off on the stretchout line spaces equal in number to the base edges of the pyramid. Thus, points are located at *a*, *b*, *c*, *d*, and *a'*. Draw lines connecting these points in the manner shown, and draw other lines from each of these points to the vertex *O'*. In this case the edge lines must be drawn in the development, since there are actual edges on the solid; besides, it is necessary to define those portions of the development as indicated on the plate. Complete the drawing in the manner shown, the outline *O' a b c d a'* being the development of the pyramid.

---

PROBLEM 12.

**41. To develop the surfaces of an octagonal pyramid.**

EXPLANATION.—The base of the pyramid whose dimensions are given in Fig. 3 on the plate is not a true octagon, the alternate sides only being equal. It will be seen, however, that the octagon may be circumscribed by a circle; that is, a circle may be described in the plan from the center *O* with a radius *O A*, whose outline will pass through all the points *A*, *B*, *C*, *D*, etc.; therefore, the development of the solid may be accomplished by this method.

CONSTRUCTION.—The true length of the edge lines is not shown in either view presented, and it is therefore necessary to draw a line that will represent the true edge in the elevation. This is found as follows: From *O* as a center, with the radius *O H*, describe the arc *H H'*, intersecting a line *O H'* (drawn parallel to the base line of the front elevation) at *H'*; project the point *H'* to the base line of the front elevation (extended) at *H''*; *O' H''* is then the true length of an edge of the pyramid, and is, at the same time, the length of the stretchout radius. Next, describe the

Digitized by Google

stretchout with this radius from the vertex $O'$ as a center; then space off the width of the surfaces shown on the base in the plan, as at $a$, $h$, $g$, $f$, etc., and complete the development as directed in the preceding problem.

---

PROBLEM 13.

**42. To develop the surfaces of an irregular frustum of a hexagonal pyramid.**

CONSTRUCTION.—The projections shown in Fig. 4 on the plate are first drawn in accordance with the dimensions there given, thus producing a right plan and elevation of the frustum. In this and all similar developments, it is desirable to extend the edges of the pyramid to the vertex of the solid. Since the drawing does not show the true length of the edge, this must first be found by the method described in the preceding problem, and produced as shown in the elevation at $O'a$. The points in the upper portion of the solid, at $B'C'D'$, are then projected to the true edge line at $B''$, $C''$, and $D''$. The stretchout is next described from $O'$ as a center with a radius $O'a$; the widths of the surfaces are then laid off at $a$, $b$, $c$, $d$, etc., and the corresponding edge lines are then drawn. Developers are now described from $B''$, $C''$, and $D''$, as previously directed, the intersections with their corresponding edge lines being noted at $b'a'$, $c'f'$, and $d'e'$. Complete the development by drawing its full outline and adding the indicators in the manner shown.

---

PROBLEM 14.

**43. To develop an irregular frustum of a cone.**

Two developments are required for this problem, one of them being fully described and the other to be drawn by the student as a test of his advancement.

CONSTRUCTION.—The projection drawings for the first development are shown on the plate at Fig. 5, that portion

Digitized by Google

of the cone representing a parabolic section being presented for development. In this, as in the preceding case, the completion of the figure, as shown by the broken lines, must first be made. Proceed then as if the complete cone were to be developed; that is, divide the outline of the base in the plan into a number of equal spaces, observing that certain of the points fall on the ends of the parabolic curve (as at $F$ and $B$ in the plan, Fig. 5). The elements of the cone are then produced in the elevation, their intersections with the edge of the frustum at $b''$, $c''$, $d''$, etc. being then projected as before to the true edge line. As in former problems, the stretchout is next described and spaced off, and edge lines are drawn. Developers may now be described as shown on the plate, and the development completed in the usual manner. The irregular curve is now traced through the points thus determined. The projection drawings for the second development of this problem are shown on the plate at Fig. 6, and, since the methods used are the same as in the case just described, the development may be completed by the student without further instruction.

---

PROBLEM 15.

**44. To develop the surfaces of intersecting cones.**

The projections for this problem are shown on the plate at Fig. 7. They should first be carefully drawn by the student, the line of intersection being accurately determined by the method for finding the intersection of two cones that was given in *Practical Projection*. After this line has been found, all construction lines used in the projection should be erased from the drawing; if this is not done, confusion is liable to result.

CONSTRUCTION.—The development of these surfaces does not differ materially from those in the preceding problem, as an inspection of Fig. 7 will indicate. First draw the development of the surface of the smaller cone; extend the

Digitized by Google

edge lines in the elevation to the vertex $O'$, as shown; extend them also to the assumed base $a\ e$ and produce the full view of the base in the manner indicated by the broken lines at ($n$), using only one-half of the circumference. The semi-circumference is then spaced off as at $a$, $b$, $c$, $d$, and $e$; $b$, $c$, and $d$ are then projected to the base line $a\ e$; and the elements $b'\ O'$, $c'\ O'$, and $d'\ O'$ are drawn as shown. The intersections of these elements with the line of intersection of the two solids are then projected to the true edge of the smaller cone, at $a''$, $b''$, etc. A stretchout for this solid is next described from the vertex $O'$ as a center with a radius $O'\ e$; the points $a$, $b$, $c$, etc. at ($b$) are located by spacing the stretchout; and the distances $a\ b$, $b\ c$, etc. are taken from the full view at ($n$). Next, draw the edge lines $a\ O'$, $b\ O'$, $c\ O'$, etc. at ($b$); and from points $a''$, $b''$, etc. describe developers in the manner shown. The irregular curve at ($b$) is then traced, completing the development for this solid.

As a matter of convenience in this case, the development of the larger cone, or, rather, as much of its surface as will show the opening made by the intersection of the smaller cone, may be drawn to the right of the projections, as at ($c$). Now draw the horizontal center line in the plan and from the center of the plan draw a line tangent to the line of intersection of the cones, marking the point where this line meets the base $4'$. Divide $1'$–$4'$ into a convenient number of parts (in this case 3), and project the points $1'$, $2'$, $3'$, $4'$ to the elevation. Draw elements from $O''$ to the projected points and mark the points where these elements cross the line of intersection of the cones $1$, $2$, $3$, $4$, $5$, $6$, and $7$. The points $1'$, $2'$, $3'$, $4'$ in the plan establish the width of the spaces that shall be stepped off on the stretchout. Describe the stretchout from the center $O''$, as shown at ($c$), and on this line set off the spaces determined in the plan at $1'$, $2'$, $3'$, and $4'$, and repeat them on both sides of the edge line $1\ O''$, as indicated at ($c$). Project the points $1$, $2$, $3$, etc. to the right-hand true edge line of the elevation, and carry them thence, by developers, to the drawing at ($c$), completing the development as there shown.

Digitized by Google

Digitized by Google

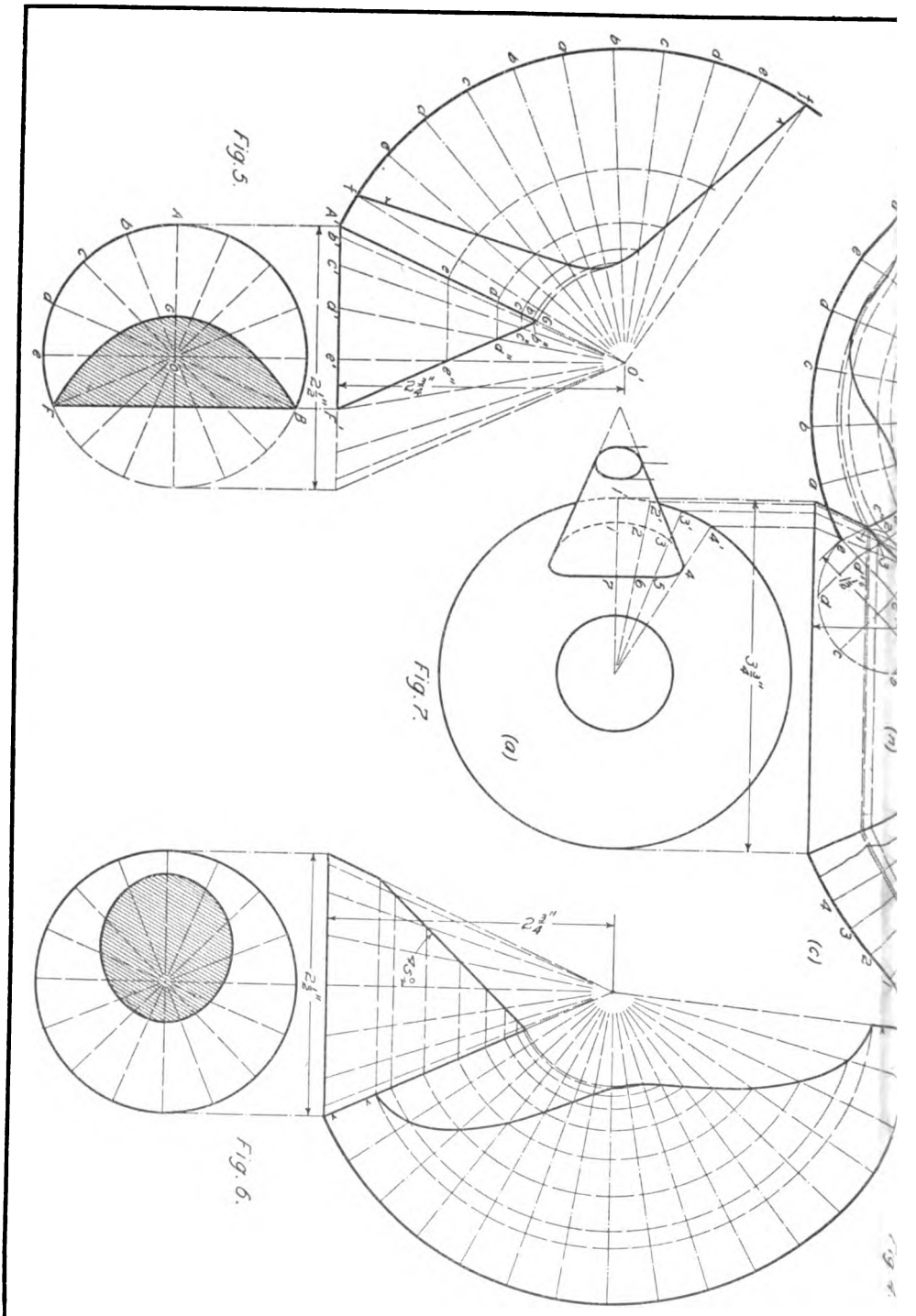




Copyright, 1899, by THE COLL
All rights
Digitized by Google

# DEVELOPMENTS-IV.




LIERY ENGINEER COMPANY.

reserved.

JOHN SMITH, CLASS Nº 4529.

Digitized by Google

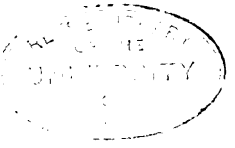

Digitized by Google

The student will readily perceive that, if the line of intersection of the two cones is not correctly drawn, the true development cannot be produced, since the drawing depends entirely on the line thus determined. If these points are incorrectly located, the development is necessarily wrong. The importance of having a correct projection is thus evident.

**45. How to Recognize Radial Forms.** — Since many objects of frequent occurrence in the trades are portions of the cone or pyramid, the student should familiarize himself with the appearance of such frustums. Many objects represent a combination of the surfaces of cones of unequal sizes, and at first sight it might appear that their development should be produced only by triangulation. But an experience in the projection of cones and conic sections will often enable the student to refer such sections to the appropriate form, in many cases thereby avoiding a tedious process of development.

The representation of the elements of the cone in both plan and elevation will determine the method to be used in the development of a given solid. In a certain case, a number of vertexes may be defined; each cone is then to be traced out carefully and the development of its surface made, or as much of that surface as is required for the object in view, the operation being similar to that of the preceding problems. This subject is given special attention in a later part of this Course, and different trade articles are developed clearly exemplifying these principles.

---

## TRIANGULATION.

**46. Elementary Principles. — Triangulation** — the process by which the development of solids belonging to the third general division is accomplished—is generally regarded by sheet-metal workers as particularly intricate and difficult. It is, on the contrary, a very simple method of development, and should, to the student that thoroughly

Digitized by Google

understands the principles of projection, present no serious obstacles. This process depends for its results on two general principles, both of which have been mentioned in this Course: *first*, to find the true length of all lines, real or assumed, appearing on the surfaces of the solid; *second*, having determined the true length of such lines, to construct triangles similar in form and relation to those shown on the solid.

Certainly, the construction of a triangle whose three sides are given is not a difficult problem; and the task of finding, from the projection drawing, the true lengths of its sides involves nothing but the elementary principles of that study. Having found the true lengths of the sides of such triangles as are involved in a development, nothing apparently remains but to show the method of arranging the triangles in their proper relation to one another on the different surfaces of the solids. Since this is naturally suggested by the shape of the solid itself, several solids are presented in the accompanying problems, from the study of which the student should learn to apply the principles to the development of any solid of this class.

**47. Illustration of Methods Used.** — This method of development has been previously mentioned, and while this principle of patterncutting is usually applied to solids having curved surfaces, it is best illustrated by its application to a solid having plane surfaces. Such a solid is shown in Fig. 28, where a perspective view is given of what may be termed a *transition piece*—that is, a piece used to connect openings of different sizes, as in pipework. Both bases are rectangular and, in this case, parallel, but diagonally arranged in their relation to each other, as may be seen from the figure.

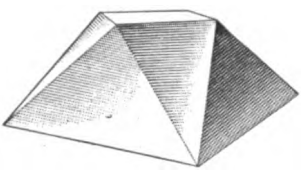

FIG. 28.

It is at once seen that none of the methods described under the headings of parallel- or radial-lined solids will

Digitized by Google

apply to the development of the lateral surfaces of this solid, although it is possible to project a full view of each of the surfaces shown in the figure. Since this would require an unusual amount of work on the part of the draftsman, the following process admitting of more rapid application is presented.

**48. Determining the Triangles.**—Clearly, a reproduction of these triangular surfaces on the flat surface of the drawing board, in the same corresponding relation with reference to one another, will be a development of the solid. Apparently, the only difficulty that presents itself is the fact that, in certain cases, the sides of the triangles are not shown in their true lengths. It is necessary to determine the true lengths of all lines, in order that the triangles may be constructed of the same size as they are on the surfaces of the solid.

As in all cases where a development is desired, a right plan and elevation must first be drawn. This is shown in Fig. 29, and from that illustration it is seen that all lines of the solid that appear on either base are shown in their true lengths. It is therefore necessary, before the triangles may be produced, to determine the true lengths of the remaining lines of the solid. As mentioned in *Practical Projection*, this is most readily accomplished by constructing, in each case, a right-angled triangle whose base is equal to the length of any foreshortened line in the plan, and its altitude to the vertical height of the same line, as shown in the elevation. The hypotenuse of such a triangle will then be equal to the true length of the line. In this case, the lines *A H*, *D H*, *A E*, *B E*,

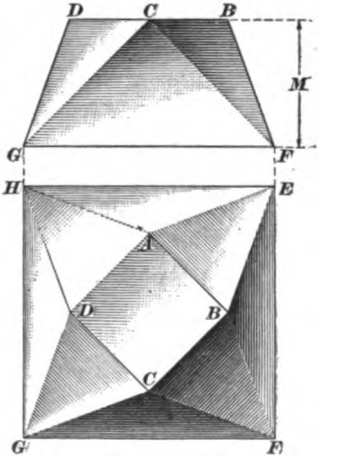


FIG. 29.

Digitized by Google

etc., foreshortened in the plan, are all represented by lines of the same length. The vertical height $M$, Fig. 29, is the same in the case of each line.

A single triangle constructed by the above method, therefore, will be sufficient to indicate the true length of all lines not shown in their true length in Fig. 29. Such a triangle is constructed in Fig. 30; the base of the triangle $A\,H$, Fig. 30, is equal to the length of $A\,H$, Fig. 29, the altitude $M$ being the same as $M$, Fig. 29. The hypotenuse of this triangle is therefore the true lengths of the lines $A\,H$, $D\,H$, etc. as shown in Fig. 29. The true lengths of all lines bordering the triangular surfaces of the solid shown in Fig. 29 having been found, the triangles may now be constructed on the drawing, care being observed that the adjacent triangles are completed *in the same order* as they are shown on the solid. Any edge

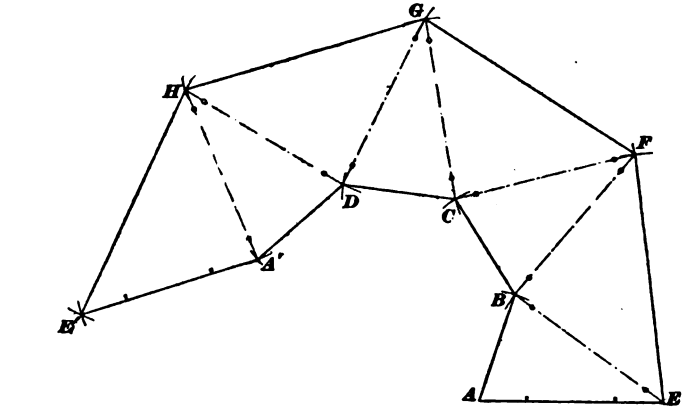


FIG. 30




FIG. 31.

of the solid may be assumed as a starting place for the operation; the true length of such an edge is then laid off on a line as at $A\,E$, Fig. 31. The triangle $A\,E\,B$, Fig. 31, is first constructed; the length of the side $A\,E$ being laid off, and $B\,E$, Fig. 29, being of the same length, an arc may be described in Fig. 31 from $E$ as a center, with a radius

Digitized by Google

equal to $EA$. Intersect this arc at $B$, Fig. 31, with one described from $A$ as a center, with a radius equal to $AB$, Fig. 29. Draw $AB$ and $EB$, thus developing the triangle $AEB$, Fig. 31, which is the correct development of the surface $AEB$, Fig. 29.

The adjacent triangle $EBF$, Fig. 31, may next be constructed. Since $BF$ is equal to $BE$, Fig. 29, an arc may be described in Fig. 31 from $B$ as a center, with a radius $BE$; this arc is then intersected by an arc described from $E$ as a center, with a radius equal to the length of $EF$, Fig. 29, thus developing the triangle $EBF$, Fig. 31, which corresponds to the surface $EBF$, Fig. 29. In like manner, each surface of the solid is developed, due care being observed that adjacent triangles are placed in corresponding positions in the development.

**49. Completion of the Drawing.**—The completion of the drawing is made in a manner somewhat similar to parallel and radial developments; that is, the edge lines may be indicated as in those methods, the outer edges being denoted by full lines and those lines on which bends are to be made when the flat surfaces are formed up being designated by the customary indicator circles. It will thus be seen that no new principles are required to produce developments by this method. A careful observance of the different portions of the drawing is required, since an object as simple as that shown in Fig. 29 is seldom met in practice. The same methods are used, however, and should be readily understood by the student and applied to the drawing in the same manner as has been shown.

---

### DRAWING PLATE, TITLE: DEVELOPMENTS V.

**50.** Several problems relating to the development of solids by triangulation are given on this plate. The same principles that were shown in connection with the development of the transition piece in Figs. 28 to 31 are used in these drawings; but, owing to the different shapes assumed

Digitized by Google

by the solid selected for each problem, slightly different constructions are given in each case.

Particular attention should be paid to the manner in which the triangles are located on the irregular surfaces, care being exercised that similar points in each view shall be taken as a basis for finding the true length of each line.

---

PROBLEM 16.

**51. To develop the surface of an irregular solid having parallel bases.**

The solid shown in perspective in Fig. 32 is the same as that used in *Practical Projection* for the projections of views of an irregularly formed solid and a sectional view from a given cutting plane.

CONSTRUCTION.—The first step is to draw a right plan and elevation, as shown at Fig. 1 (*a*) on the plate. Draw the horizontal diameter *a m* through the plan, thus dividing the solid into symmetrical halves. It will now be seen that, if a development is made of the upper portion of the solid, as seen in the plan, a duplication of the resulting figure will be the complete development. In order to locate the sides of the triangles that are to be assumed on the surface of the solid, the outline of the bases is divided into the same number of equal parts (in this case 6), as at *a*, *c*, *e*, etc. on the lower base and *b*, *d*, *f*, etc. on the upper base.

Draw, in succession, lines alternately from the points on the upper and lower bases; *a b* being on the line of the diameter, draw *b c*, *c d*, *d e*, etc. Project these points and lines to the elevation, and represent them by dot-and-dash lines, as used in preceding developments to designate edge lines. The surface of the solid is thus divided into a number of triangles that may be better understood by the student from an inspection of Fig. 32.

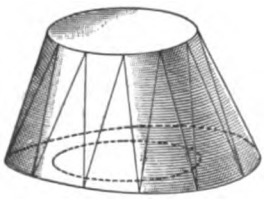

FIG. 32.

Digitized by Google

This is a perspective view of the solid, showing in the full lines the triangles that have been assumed on its surface. The lengths of the sides *b d*, *d f*, *a c*, *c e*, etc. may be taken as chord distances directly from the plan, since they are there shown in their full length. A construction of right-angled triangles is necessary, however, in order to find the true lengths of the lines *b c*, *c d*, *d e*, etc., Fig. 1 of the plate; and, in order to construct them, the base line *a' m'* of the solid in the elevation, Fig. 1, is extended indefinitely toward the right of the drawing to *m''*, as shown at (*b*).

At a convenient distance from the elevation, locate a point on this line, as at *b'* in Fig. 1 (*b*) on the plate. Take the distance *b c*, as shown in the plan, and set it off with the dividers, as at *b' c'*; in like manner, make *c' d'* equal to *c d*, as shown on the plan, and proceed to copy all the distances there shown until the point *m''* is reached. It will be seen from an examination of the projections that the lines *a' b* and *m' n* are shown in their true length in the elevation, and a triangle is, therefore, not required for those lines.

Since the bases of the solid are parallel, the vertical height of the triangles at (*b*) is the same in all cases, and may be projected from the elevation as shown on the plate. The true lengths of all lines now being determined, the triangles may be constructed as shown at Fig. 1 (*c*). Draw the line *a b*, making it equal in length to the corresponding line in the elevation—that is, *a' b*; next, describe an arc from *a* as a center, with a radius *a c*, taken from the plan at (*a*); intersect this arc by an arc described from *b* as a center, with a radius equal to the length of the hypotenuse of the triangle whose base is *b' c'* in (*b*). This completes the triangle *a b c* at Fig. 1 (*c*). The triangle *b c d* is next constructed in a similar manner, and the completion of the development is accomplished by a continuation of the methods described. Small arrows are introduced in Fig. 1 (*c*) to indicate the location of the centers of the corresponding arcs. Thus, the arrowhead on the line *b c* is pointed toward *b*, and indicates that the center of the arc, by means of which the point *c* is determined, is located at *b*; *c* in like manner

Digitized by Google

is similarly shown to be the center of the arc described through *d*. Since there are no edges to be bent angularly when the surface is formed to the shape shown in the plan and elevation, the circular indicators are omitted; but arrowheads indicating the boundary edges of the development may be added as heretofore, completing the problem.

---

PROBLEM 17.

**52. To develop the surface of an irregular solid having inclined bases.**

A perspective view of this solid is shown in Fig. 33; it is a modification of the solid used for the preceding problem, and may be drawn as shown on the plate at Fig. 2 (*a*). The outline of the lower base is drawn as in Fig. 1, and the center of the semicircle at *o* is also the center of the circle that represents the inclined upper base, the angle of inclination being 45°.

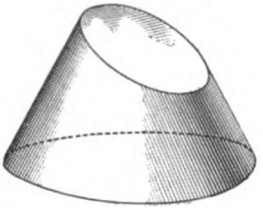

FIG. 33.

CONSTRUCTION.—Draw a line (not shown on the plate) vertically upwards from *o*, and fix the point *h* 1½ inches above the lower base of the solid. Through this point draw the line *b n* at the given angle; and at right angles to *b n* describe the circle representing the full view of the upper base, as shown. Next, locate the points shown on the semicircle and, by means of the temporary full view shown at *b' h' n'*, project the inclined view of the upper base in the plan. These points are then used, as in the preceding problem, for the purpose of defining the triangles. Divide the lower base of the solid, as shown in the plan, into an equal number of parts, and draw lines representing the sides of the triangles, as in Fig. 1, producing them in the plan and elevation, as *b c*, *c d*, *d e*, etc., Fig. 2 (*a*).

The manner of determining the true lengths of the lines *b c*, *c d*, *d e*, etc. is slightly different from that used in the preceding problem, since the vertical distances are not the same

Digitized by Google

in all cases. Produce the lower base *a m* to the left, as shown at (*b*) on the plate, and on this line set off the lengths of the lines *b c*, *c d*, *d e*, etc. as they appear in the plan at Fig. 2 (*a*). The vertical heights are then projected from the elevation in the manner shown, taking similar points in each case.

The true lengths of all lines now having been determined, the development may be constructed as shown at Fig. 2 (*c*). In this case, as in all instances where the solids are uneven and irregular in their form, it is preferable to begin the development from the longest edge that is shown in its true length. The line *m n* is, therefore, copied as shown at (*c*), and the triangle *n m l* constructed as in the preceding development, taking the lengths of the radii *n l*, *l j*, *j h*, etc. from the full view of the upper base, and the lengths of the radii *m l*, *l k*, *k j*, etc. from their respective triangles as formed at (*b*), while *m k*, *k i*, *i g*, etc. are taken from the full view of the lower base as shown in the plan at (*a*).

---

PROBLEM 18.

**53. To develop the surface of an irregular solid whose upper base is rightly inclined and whose lower base is a portion of a cylinder.**

This solid is shown in perspective in Fig. 34, and the triangles that are to be located by the student in the projections are represented in the drawings shown on the plate.

CONSTRUCTION.—As may be seen from Fig. 3 (*a*) on the plate, the projections do not differ materially from those of the preceding problems. First draw the oval in the plan as in the two preceding problems, noting that, in this case, the outline is a foreshortened view of the real surface. Next, draw a line vertically upwards from *o*, the center of the semicircle, to the point *h* in the elevation, which is

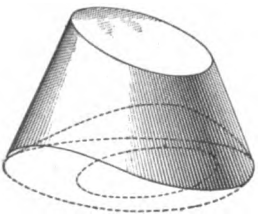

FIG. 34.



Digitized by Google

3 inches distant from *o*. Through *h* draw *b n* at an angle of 30° with the horizontal; at right angles to *b n*, project the full view of the upper base, which, as in Problem 17, is a circle. Through the plan draw *a m* and bisect it at *x*; with *x* as a center, and a radius of $1\frac{3}{8}$ inches, describe, in the elevation, the arc *a g m*, representing that view of the lower base.

As in the preceding problem, project the foreshortened view of the upper base, and, as before, designate the positions of the six spaces. Since the view of the base in the plan is foreshortened, it is necessary to project its full view, in order to ascertain the true distance around the outline. Divide the foreshortened outline of the lower base shown in the plan into six equal spaces, at *a*, *c*, *e*, etc. First, however, draw the center line *a m*, as in previous cases, and then project to the elevation the points thus located. To produce the full view, as at Fig. 3 (*c*), extend the line *a m* in the plan toward the left as far as to *m'*, and on this line lay off the stretchout of the lower base, as shown in the elevation; thus that portion of the solid is treated as a surface developed by means of parallel lines. Draw edge lines perpendicular to the stretchout, as on the plate, and produce developers from the points *a*, *c*, *e*, *g*, etc. in the plan to *a'*, *c'*, *e'*, *g'*, etc. at (*c*). The light curve shown at (*c*) is then drawn and represents the true outline of the lower base of the solid; measurements may now be taken from points on this outline, as *a' c'*, *c' e'*, etc., for the radii of the arcs required in that portion of the development at (*d*), their true lengths thus being shown. The true lengths of the lines shown in the projections at *b c*, *c d*, *d e*, etc. are obtained as before by constructing temporary triangles at (*b*), (*b*). Their projection on both sides of the elevation is done to avoid confusion from having a number of lines cross on the drawing.

Note the varied heights of the triangles, hence the need of extreme care; for, if corresponding points are not taken from both plan and elevation, it will be difficult to trace the resulting errors. The true lengths of all lines having been

Digitized by Google

Digitized by Google

Fig. 2.



Fig. 3.



Copyright, 1899, by THE C

All rights

Digitized by Google

# DEVELOPMENTS-V.




Fig. 1.



LIERY ENGINEER COMPANY.

served.

Digitized by Google

Fig. 2.




Fig. 3.



Copyright, 1899, by THE C
All rights
Digitized by Google

# DEVELOPMENTS-V.

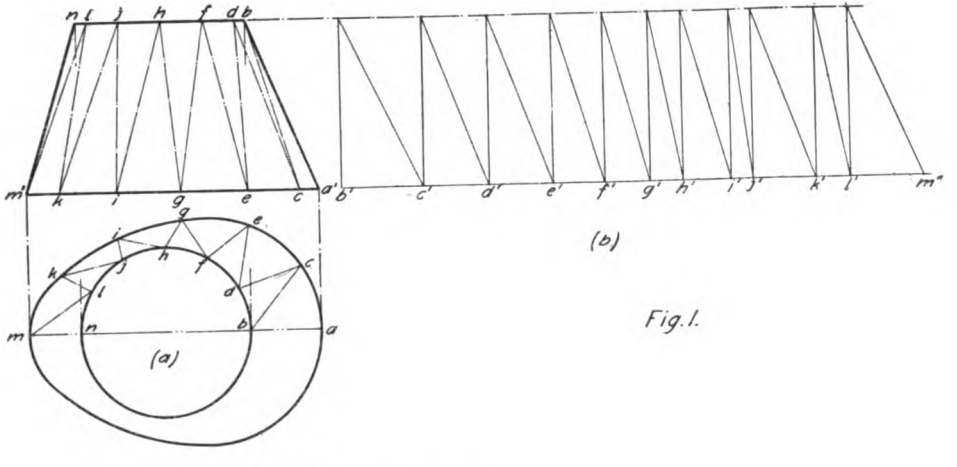


Fig. I.

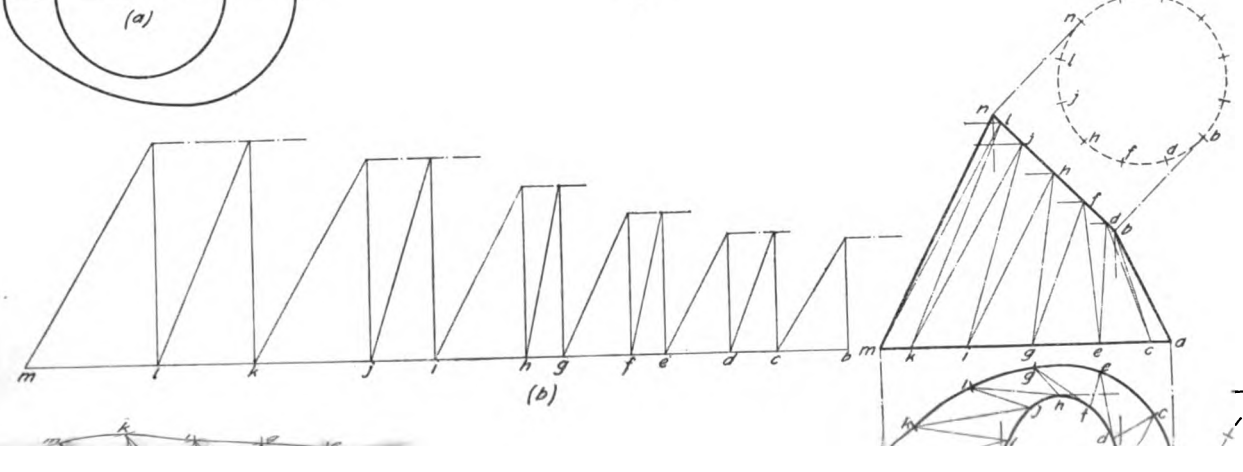


JOHN SMITH, CLASS № 4529.

COLLIERY ENGINEER COMPANY.

All rights reserved.

Digitized by Google

Digitized by Google

determined in (*b*), (*b*), and (*c*), the development at (*d*) may be constructed by methods precisely like those used in Problems 16 and 17.

Since *m n* is the longer true edge shown in the elevation, the development should begin from that line by making *m n* at (*d*) equal to *m n* in the elevation at (*a*). With a radius *n l* (taken from the full view of the upper base), and with *n* in (*d*) as a center, describe an arc as shown, and intersect it at *l* with an arc described from *m* as a center, with a radius equal to the hypotenuse of the triangle *m l* at (*b*)—the true length of the line *m l*, as shown at (*a*).

This completes the triangle *m n l* at (*d*). Next, describe an arc from *m* as a center, with a radius *m' k'* taken from the full view of the lower base at (*c*), and intersect this arc at *k* with an arc described from *l* as a center and a radius equal to the hypotenuse of the triangle *l k* at (*b*). The triangle *m l k* is thus completed, and the remainder of the figure at (*d*) is constructed in a similar manner. The development at (*d*) is one-half of the irregular surface of the solid shown in Fig. 34.

It should be noted that, in the practical work of laying out patterns by this method, a sufficient number of points should be located on both bases of the solids to insure accuracy in tracing the curved line of the development.

**54. Importance of a Correct Projection.**—It will be seen from the foregoing problems that in each case the first operation is the drawing of a correct projection. The true lengths of all real or assumed lines that may have been shown in such a drawing of the solid are thus ascertained, and the draftsman is then enabled to determine which of the three general methods is to be applied in order that a development may be produced. The views to be drawn are, in all cases, those that will represent the solid in a *right* position, since the true length of any line is most easily obtained from such drawings. The ease with which this is accomplished is clearly shown in the foregoing examples; and if the student will devote his attention to the projection of a variety of

Digitized by Google

commonly occurring trade subjects, he will quickly acquire a facility obtained only by constant practice.

Particular attention is directed to the imaginative feature of the projection, as mentioned in *Practical Projection;* for a correct conception of the actual position of the various lines as they will appear in the completed object can be acquired in no other way, and it is of extreme importance to the draftsman desiring to become proficient in the production of developments. If a student is expert at "reading" drawings, he will experience no difficulty in applying the various principles that have been given for producing developments of surfaces.

**55. Employment of Modified Methods.**—In producing the developments given in the last three problems, the triangles are not always projected from the views in the manner shown on the plate. Short methods are often used; but since, in such cases, there is more chance for error, the

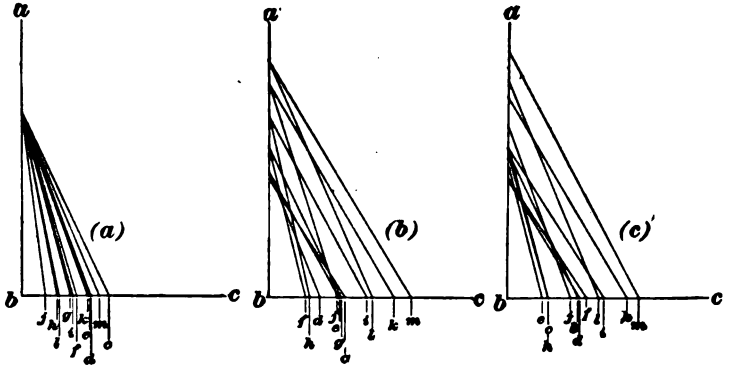


FIG. 35.

student will do well not to attempt any other method than that just described—at least, not until the principles are firmly fixed in his mind. As the drawings from which such developments are made are often too large to permit the projection of the triangles in the manner shown, the construction given in Fig. 35 is often applied. In

Digitized by Google

this figure the triangles for Problem 16 are shown at (*a*), and those for Problems 17 and 18, at (*b*) and (*c*), respectively. A single right angle is first drawn, as *a b c*; the lengths of all lines shown in the plan are then set off with the dividers on the side *b c*, while the vertical distances taken from the elevation are set off on the side *a b*. A number of slanting lines are then drawn between the points thus located, each forming the hypotenuse of its respective right-angled triangle. Unusual care must be observed when this method is adopted, since the points are located close together and are very apt to be mistaken for one another.

When many lines thus appear in the drawing, the student is very apt to become confused and to consider the drawing as complicated. If due care is used and ample time taken, this confusion will be avoided, for the drawings themselves depend on the simplest of principles—principles that may readily be understood by any one willing to give the time necessary for mastering this work.

**56. Scalene Cone.**—The development of this solid illustrates a short method of triangulation applicable to a number of solids, particularly to those represented by transition pieces one of whose bases is a polygon. A right view of such a cone is presented in Fig. 36 (*a*), and an inspection of its elements will show that they are of unequal length. This inequality, combined with the fact that a section taken at right angles to the axis of a scalene cone is not a circle, precludes its development by the method applied to radial solids, although the process is a combination of that method and triangulation. In accordance with instructions given hereafter, a drawing of this development should be made by the student, although it is not required to be sent to the Schools for correction.

After drawing the right plan and elevation as in Fig. 36 (*a*), the base is divided into a convenient number of equal parts (12 in Fig. 36). Next, the elements are drawn in both views, and it may then be seen that the surface of the cone is divided into a number of triangles whose common apex is

Digitized by Google

at *o*, the vertex of the cone. In the elevation, the elements *o g* and *o a* are the only ones shown in their true length. In order to determine the true lengths of the remaining elements, the drawing shown at Fig. 36 (*b*) is constructed. Draw the right angle *l m n* and set off *m o*, the vertical height of the cone.

The length of each element shown in the plan at (*a*) is now set off on the line *m n*; thus, make *m g* at (*b*) equal to *o' g* in the plan at (*a*), *m f* at (*b*) equal to *o' f* at (*a*), etc.

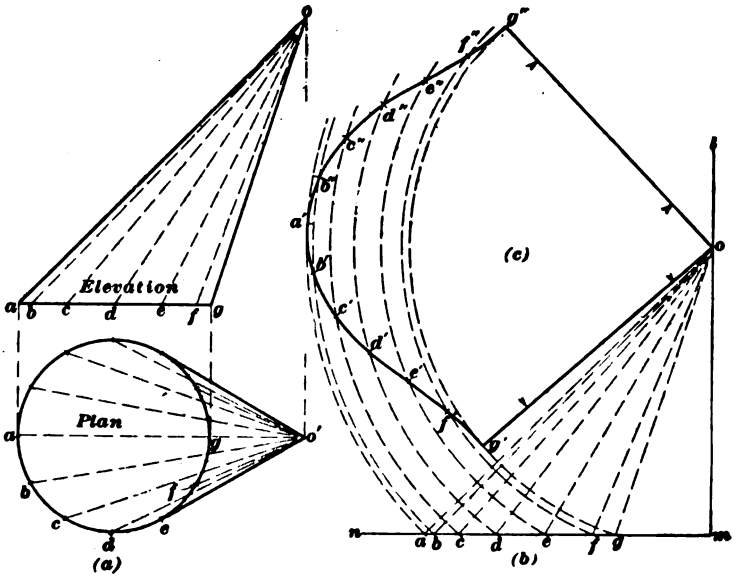


FIG. 36.

Draw *o g*, *o f*, *o e*, etc. at (*b*), thus producing the elements of the scalene cone in their true length, the method used, as will be seen by the student, being similar to that used in the other triangulation problems.

From *o* as a center, with *o g*, *o f*, *o e*, etc. as the respective radii, describe arcs in the manner shown in Fig. 36 (*b*). At a convenient point locate *g'*, and draw *g' o* as indicated at (*c*). This line (*g' o*) is one edge of the development, which may be completed by making *g' f'* at (*c*) equal to *g f* in the plan

Digitized by Google

at $(a)$, $f'\ e'$ at $(c)$ equal to $f\ e$ at $(a)$, etc., the compasses being set at this distance and similar arcs described as the successive points are located. Proceed in the manner shown until the point $g''$ is reached, when the development is completed by drawing $o\ g''$ and tracing the curve through points at the intersection of the arcs. The outer edge lines of the development may be further noted by the use of indicators as before described.

There are many irregular solids to which this method of development may be applied. The student should therefore work out this drawing very carefully, that the construction may be well understood and the method of its application readily seen. Where convenient, models should be made of these developments. These models may be cut out of paper or thin sheet metal, and afterwards formed up to represent the solids described in the particular projections accompanying each problem. A better idea of the solids and their respective developments will thus be obtained. Should any errors arise in the course of the work, they may frequently be detected by this means.

---

## APPROXIMATE DEVELOPMENTS.

**57. The Sphere.**—The sphere is the most prominent example of the many solids whose surfaces admit of approximate development. The methods used with solids capable of accurate development must be applied to solids of approximate development. Since solids of approximate development may be resolved into parts resembling those capable of accurate development, it is clear that the same general methods are easily applicable. Thus, in the case of the sphere, that solid is resolved into a number of frustums of cones, in the manner described in the next article.

As already stated, it is necessary to submit the covering for these solids to the operations of "raising," in order to conform the metal to the profile of the solid itself; an allowance is therefore required for the consequent stretching of

Digitized by Google

the stock. This allowance varies with the thickness and quality of the material; hence, no general rules can be given here. The mechanic must be acquainted with the nature of the material in order to determine the allowance required in each case. The method of applying these shop rules will be considered later in the Course, but an example is here given showing how certain methods may be adapted to the case of the sphere.

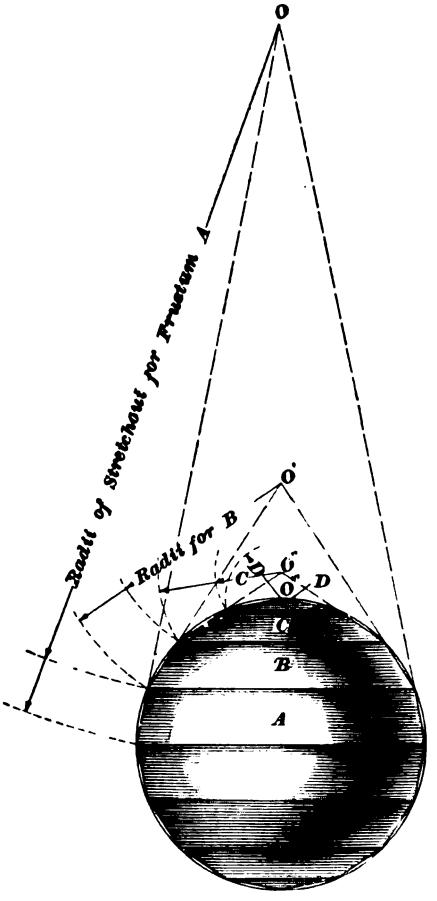


FIG. 37.

**58. Development of the Sphere.**—It has been stated that each solid of *approximate* development must be referred to one of the three classes of solids capable of *accurate* development. It is first necessary, therefore, to determine which of the regular solids the irregular solid to be developed most resembles. The blanks, or patterns, produced by these methods are, as has been observed, flat, or plane, surfaces; and, since it is necessary to "raise" these surfaces by hammering, the draftsman must imagine the surface desired in the final form. The principle by which these solids are classified is illustrated in Fig. 37 by the perspective of the sphere and its resolved cones. After

Digitized by Google

the sphere has thus been resolved into cones—or rather, frustums of cones—their developments may be produced in the regular way, each frustum being separately treated, in the manner shown. This is called *development by zones*, and may be applied to a number of irregular solids resembling the sphere.

Another method of treatment is shown in Fig. 38, certain sections of the sphere being here considered as portions of the surface of the cylinder. This method is referred to as the *development by gores;* the patterns are developed, as with any portion of the cylinder, by means of parallel lines.

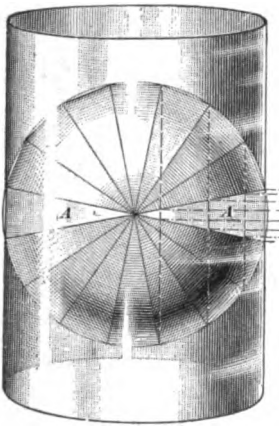


FIG. 38.

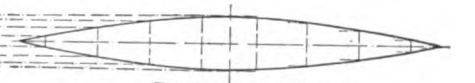

*Development of Gore A*

When the curved surface of any solid is such that it cannot be considered as part either of a cone or of a solid with parallel lines, it is customary to determine a series of sections in a regularly occurring order and apply the method of triangulation as shown in Problems 16 to 18. Such surfaces are then formed up as nearly as possible to the shape of the solid and are then submitted to the operations referred to for "raising" to their proper shape.

The remainder of this Course is devoted to illustrating the practical methods of applying the principles of developments to actual shop problems and patterns.

Digitized by Google

Digitized by Google

# PRACTICAL PATTERN PROBLEMS.

(PART 1.)

## GENERAL CONDITIONS AND APPLICATIONS.

**1.** The principles of projection and development having been clearly illustrated, the practical application of these principles to commonly occurring trade problems will now be considered. *Practical Pattern Problems* is printed in three parts, none of which is accompanied by a Question Paper. In this section, before taking up the problems, subjects of general importance to the sheet-metal worker are treated. The articles on these subjects should be read carefully. The tables given here and in *Arithmetic* are useful in solving the problems and examples that follow.

**2. Familiarity With Methods Indispensable.**—Owing to the diversity of forms that occur in actual workshop practice, it is necessary for the student to be familiar with the operations that have preceded, and be ready to apply, in any particular case, the method best adapted to the production of the pattern. If he is skilful in the application of these methods, he will often be able to shorten an otherwise tedious process, and in special cases may be able to use methods of his own that will have been suggested by his



For notice of the copyright, see page immediately following the title page.

Digitized by Google

study of the subject. The facility with which these results are attained will depend on the proficiency of the student—a high degree of expertness can be acquired only by constant practice.

It will be noticed that in the construction of the projections required for the various problems, the regular arrangement of the various views given in *Practical Projection* is occasionally departed from, and an arrangement better adapted to the particular case in hand is used instead. The student will, however, readily see the connection that exists between these drawings and those previously given; and, from the knowledge of projection that he has now acquired, he will be able to apply, in special cases that may arise, the arrangement of views best adapted to the purpose.

It seldom happens that similar drawings made by two draftsmen in the delineation of sheet-metal patterns are exactly the same in every particular. They may both reach the desired end and produce a correct pattern, but an examination and comparison of the work will usually show that the different steps have not been taken in the same order by both men. It may be found that one has used a long and tedious process, while the other may have greatly shortened his work by ingenious adaptations of certain fundamental principles. The thoughtful draftsman that gives his attention to the work in hand and studies labor-saving devices and processes is sure to be rewarded by a reputation for skill and efficiency.

In handling the problems treated, these short methods have been quite frequently used; they are explained in detail as they occur, in order that the student may profit by the practice thus given and be enabled to apply to his future work the principles therein involved.

**3. Patterns for Complicated Forms.**—Parallel, radial, and triangulation methods must often be applied to different portions of the same solid. The objects constructed in the sheet-metal-working trades are frequently of such irregular shape that no one process of development may be sufficient

Digitized by Google

in any particular case to enable the draftsman to produce the entire pattern of the solid. One method may be best suited to develop certain of its surfaces, and another method to develop the remaining surfaces. In some instances, all three processes must be utilized before the development is complete. In such cases, the draftsman is quite apt to become confused; a careful development of each surface, with close attention to the corresponding lines, is therefore indispensable.

**4. Unwise Economy in Drawing Paper.**—It is a frequent practice, and one that deserves condemnation, for the draftsman to be too saving of his paper; in many instances, errors arise simply from the fact that too many drawings are attempted on the same sheet. The result is generally an incorrect pattern, and when the draftsman's attention is called to the mistake—often in no gentle way—his only excuse is, "Well, I must have taken the wrong line." On examining the drawing afterward, he frequently finds that his work has been correctly done, but that in transferring the pattern to the metal, lines or points were wrongly taken, thus spoiling an otherwise carefully constructed pattern. Possibly many pieces have already been cut in accordance with the pattern; these must be thrown on the scrap pile and the lost time and wasted stock charged to the account of profit and loss. After such an incident, it is within the range of possibility that the draftsman's mail will be delivered to a new address and among the certainties that he will be more careful to avoid such mistakes in the future.

It is true that the draftsman is compelled in many cases to lay out the patterns for different portions of some objects in such a manner that the developments cross, or overlap, one another on the drawing, this being necessary in order to avoid the drawing of another projection; unusual care, however, should be exercised in such instances.

**5. Preservation of Drawings.**—Another point to be observed in this connection is that all detail drawings should be carefully preserved; if the same sheet of drawing paper

Digitized by Google

is used repeatedly for different developments, it will be extremely difficult to refer to them intelligently when occasion requires. Or, if some person other than the one that made the drawing should be obliged to get out work from the same details, he will usually find it impossible to determine the outlines of the various patterns that have been developed.

In the office of every well-regulated sheet-metal-working establishment, what is called a *contract record book* is kept, in which is entered a description of every contract secured. Each contract is usually distinguished by a number, and this number is often used to designate the work while it is undergoing construction. Wherever this excellent system has been adopted, the draftsman should be particular to designate by its proper number every drawing pertaining to a contract. It is often desirable, where many drawings are made for the same contract, to indicate these drawings by independent numbers or short descriptive terms, in order that reference to them may be more readily made. A small space, usually in the lower right-hand portion of the drawing, is devoted to these memoranda, and the contract number, together with such other descriptive matter as may be found necessary, is neatly marked on the drawing. The freehand alphabet previously described may be used to good advantage, since the letters are clear and easily read. In some establishments, a rubber stamp is used, lettered as shown in Fig. 1; and, as before, the numbers and description are filled in with some freehand letter. In this instance, the contract number has a further significance; its first two figures refer to the year in which the contract was secured—the date being that on which the drawings of a particular sheet were completed. No sheet should contain drawings that have reference to more than

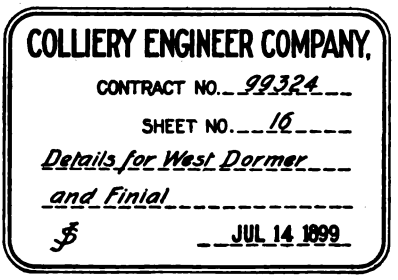


FIG. 1.

Digitized by Google

one contract. The different drawings and details may then be filed—each contract or number by itself—and readily referred to as occasion requires.

**6. Allowances Necessary in Laying Out Work.**—During the construction of the drawings in *Development of Surfaces*, no attention was paid to the thickness of the covering of the different solids. This covering has been considered simply as a surface, and as such has been represented on the drawing board. Before the patterns for any object are laid out by the draftsman, however, it is essential that the properties of the material to be used in its construction should be considered. Such investigations often show that certain changes of construction must be made in the drawing; these changes should be made in the manner required by the nature of the material and the conditions that prevail in the object itself. This is an important subject, and in order that it may be thoroughly understood by the student, his attention is directed to a study of a few of the commonly occurring requirements. These changes will be considered under two heads: *first*, those made necessary on account of *bends* in the material; and *second*, those required for *laps*, *locks*, and *edges*.

**7. Allowance for Bends.**—When the metal used in any construction is lighter than No. 24 gauge, no allowance is usually necessary for its shrinkage under bending operations, unless the work in question is very small and great accuracy is desired, in which case, methods similar to those used for the heavier gauges may be adopted.

When heavy sheet metal is formed into cylindrical shapes, such as pipes and round-tank work, and it is desired to preserve an exact inside diameter, it is customary to add a certain amount to the stretchout of the pattern to make up for the loss of stock in bending, due to the thickness of the material, and also for the imperceptible inequalities in various portions of the curved surface. Workshop practice varies in the amount to be added; some mechanics allow three times

Digitized by Google

the thickness of the material, while others allow five, six, or even seven times this amount. Since it is found that the metal "takes up" an additional amount, varying with its nature, it is usually considered the best practice to allow seven times the thickness of the metal. When the article is of such a form that only a portion of the full circumference is needed in the pattern, a proportionate allowance must be made.

In the case of patterns of irregular outline, as for elbows and certain other forms, this allowance must be made on the stretchout before the pattern is developed, in order that the added amount may be equally distributed over its surface. The practical methods by which this is accomplished will be fully illustrated in connection with several problems.

**8. Angular Bends.**—Probably the operation most commonly required of the sheet-metal worker is that of making square or angular bends, similar to those shown in Fig. 2 (*a*) and (*b*). In the lighter gauges of metal no allowance is necessary for this operation; but when the thickness of the material exceeds No. 24 gauge and accurate work is required, several elements must be taken into account.

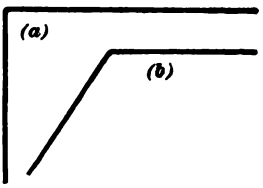

FIG. 2.

First of all, if the metal is such that a sharp square bend cannot be made to advantage, either on account of its extreme thickness or of its resistance to the bending operation, a representation must be made of a form similar to that which the metal will assume under the conditions through which it must pass; the detail may then be worked out in accordance with the resulting form. For example, let us suppose that a certain metal of a specified thickness is to be used in the construction of a tank having the form of a parallelopipedon—

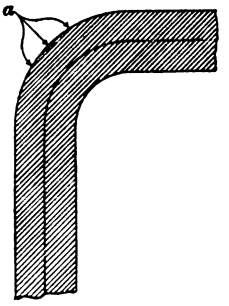

FIG. 3.

Digitized by Google

that is, the shape of a rectangular prism. Square bends are required at the corners of this tank, and, on trying a piece of the metal, it is found that the angle shown in Fig. 3 is as sharp as can be conveniently made with the machinery at hand. It is necessary, in this instance, to represent the outline of the corner on the drawing by the broken line passing through the central portion of the section. The solid is then treated on the drawing as though it had similarly rounded corners, and its projection and development are made in accordance with that form. Possibly the inner dimensions of the tank have been given to the draftsman, in which case it will be found necessary to construct the drawing in such a manner that allowance may be made for the thickness of the material. It will be seen from Fig. 3 that if the broken center line be taken for the outline of the pattern—inside measurements being given, as is usual in such cases—then, for every square bend of the material, an amount equal to the thickness of the metal must be added to the stretchout.

**9.** Angles other than right angles must be treated in a similar way, the center line of the metal being taken for the outline of the pattern. Allowances necessary in the case of other forms may be made in accordance with the suggestions that have here been given; but, in all cases, a test bend should be made and the outline of the drawing should follow the center line of the material. No definite rules can be given that will apply in all cases; different flanging, bending, and forming machines take up unequal amounts, and the experience of the workman must furnish the needed guidance.

It is found that an unusually sharp bend will always cause sheet metals to stretch at the outer part of the curve, as indicated at *a*, Fig. 3. When great accuracy is desired in cases where this stretching is considerable, it should be noted in the test and an allowance made for it on the drawing, although it is not usually deemed of sufficient importance to be taken into account.



Digitized by Google

**10. Allowance for Laps, Locks, and Edges.**—The method of adding allowances to the pattern for **laps** is so simple that little need be said concerning it. In the case of the lighter gauges of metal, it is necessary merely to add the required amounts in their proper places; but where heavy metal is used and a flush joint is desired, as in Fig. 4, the amounts required for the offset bends at *a* and *b* must be considered by the draftsman. Where such a seam as that shown in Fig. 4 is made on flat work, and an accurate layout is necessary, an amount nearly equal to two thicknesses of the stock is needed; this amount should be determined and added to the pattern, as in the case of the square bend previously mentioned. If the seam occurs transversely in round work, the addition need not be so great, since there will be a stretching of the metal in working out such a bend. The correct allowance in such cases is best determined by actual experience and a knowledge of the properties of the metal used.

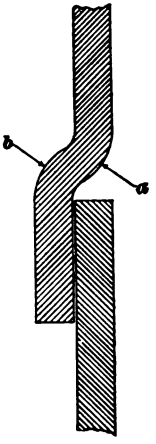

FIG. 4.

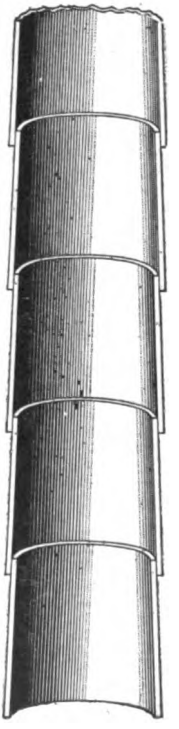
FIG. 5.

**11.** When pipes are made of heavy metal, with joints at frequent intervals, and it is not desired to flange each section as represented in Fig. 4, it is a common practice to consider the sections as frustums of cones. The pattern is therefore given a certain amount of flare, as in Fig. 5. The method of laying out the pattern in such cases is to treat each section as a radial solid to be developed by methods already known to the student.

In a variety of work, such as tapering joints of stovepipe, stack cylinders, or boiler sections, this flare is not so

Digitized by Google

pronounced as to require the laying out of the pattern with a "sweep." In such instances, the required radius will be too long even if trammels are used, and it is customary to lay out the pattern for each section in the form of a trapezoid.

An illustration of a case of inside and outside laps occurring at the corners of square work constructed of heavy

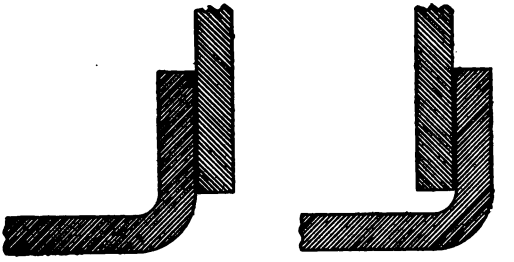

FIG. 6.

metal is furnished in Fig. 6. The method of making the necessary allowances will be apparent from an inspection of that figure. The draftsman's judgment is always indispensable and he must find the construction best adapted to the purpose, for on this will depend the degree of excellence in each particular case.

**12. The Lock Seam.**—When a joint is made between two pieces of comparatively thin metal, either on a flat surface or lengthwise on a flaring or a cylindrical surface, what is technically termed the **lock seam** is frequently used. This is used for many of the straight seams in pipework, for the side seams in tinware, and for many cases of flat work. An illustration of this seam may be seen in Fig. 7, the sheets *A* and *B* being thus joined along the seam *c*.

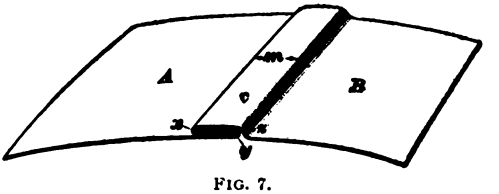


FIG. 7.

Note that there are four thicknesses of metal at *c*, and, since there is but one thickness at other places on the two sheets, it is evident that an allowance must be made equal

Digitized by Google

to three times the dimension *m*. In addition to this, some allowance must be made for the stock taken up by the curved bends at *x*, *y*, and *z*. As previously stated, the amount required for these bends depends on the thickness of the metal used, and, in the case of metal thinner than No. 24 gauge, this amount need not be taken into consideration unless unusual accuracy is required. Where heavier metal is used, however, the actual width of material taken up by such bends must be computed and added to the pattern.

When a lock seam is required in a pattern of irregular outline, it is necessary to add one-half of the requisite amount to each edge thus joined. This is done to preserve the contour of its outline when the metal is formed, and this precaution should always be carefully observed when such patterns are laid out.

The **double lock,** shown in Fig. 8, is used in certain work, and, as may be seen from the illustration, requires the addition of five times the dimension *m*, as well as an allowance for the curved portions of the metal. By making a test seam, the student should in all cases be able to determine the correct allowance. He should also be familiar with the various amounts taken up by different locking and bending machines, and thus be better prepared to make necessary allowances in proper places as occasion requires.

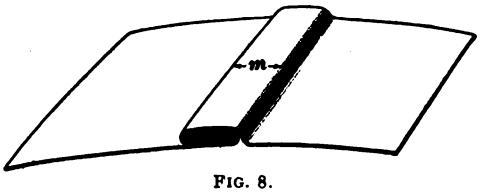

FIG. 8.

**13. The Double Seam.**—A seam somewhat similar to the lock seam is often used at the corners of angular work and in the connections made between flat and curved surfaces. It is called a **double seam,** and is shown in its application to an angular corner at (*b*), Fig. 9. The sheets *A* and *B* are shown at (*a*), Fig. 9, with the seam partially completed; the seam is occasionally left in this way, but it is referred to as a double seam only when the operation is

Digitized by Google

finished by turning over the edge, as at Fig. 9 (*b*). As may be seen from the figure, an allowance equal to three of the dimensions *m* is necessary. In this case, however, the width of but one of these surfaces is added to the sheet *A*, while the width of two is added to *B*.

There are many special machines in use for effecting this operation, and, since they all differ in the amount of stock

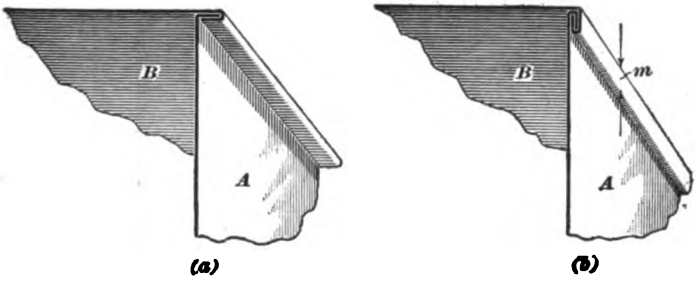


FIG. 9.

required for the seam, the draftsman must determine the correct amount by experiment and make the necessary additions to the pattern.

In certain cases, an edge or flange is required for the purpose of stiffening an article, thus enabling it to hold its shape and withstand strains. The only application that need be considered is that made in the case of the so-called "wiring" operation, since all other edges added for this purpose are proportioned at the discretion of the draftsman and in accordance with the variety of work and quality of material.

**14. The Wiring Operation.**—It is often desirable to increase the strength of cylindrical or flaring articles, especially those made from thin sheet metal, by enclosing a wire in certain of their edges, as shown in Fig. 10. The wire in this illustration is shown larger than the size of the vessel would warrant; but this is done in order that the principle of the operation may be more plainly seen. The amount usually added to the height of the pattern for this operation is equal in width to three-fourths of the circumference

Digitized by Google

of the wire—indicated by the dimension *m*, Fig. 10. When this work is done by means of power machinery, and the wire is "curled in" either by direct-acting dies or by a rapidly revolving wheel suitably grooved, there is a certain amount of stretching of the material. This amount can be determined only by careful tests and should be provided for accordingly.

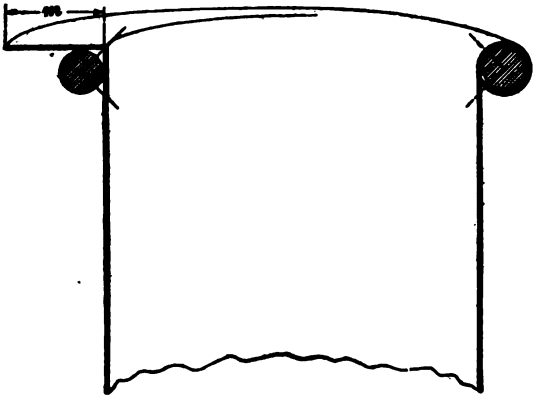

FIG. 10.

In the manufacture of many articles, especially tinware and light brass goods, where cheapness is an object, the wire is often omitted; but, since the formation of the work is the same as when the wire is actually used, a similar allowance should be made; that is, three-fourths of the circumference of the inside diameter of the curl is allowed in the pattern.

**15. Notches.**—The next important feature to be taken into consideration is the manner in which the pattern shall be notched. That is, the allowances that have been made for the various purposes described in the foregoing text must be finished at their ends in such a manner that when the several pieces of the pattern are joined, the finished article will present a neat appearance. No part of the work counts for so much in the appearance of the finished article as the manner in which the notching is done. If the

Digitized by Google

various edges do not meet exactly throughout, the pattern-cutter will be blamed for poor work. He should therefore examine the edges as carefully as any other portion of the work, and see that they are so trimmed that, when the work is put together, they will make a neat joint. Attention to these minor details of construction distinguishes the careful draftsman from his unfortunate fellow workman with whom fault is continually being found for carelessness.

**16. Methods of Transfer.**—After the pattern has been developed on detail paper and the necessary edges properly marked, as above described, it may be transferred to the sheet metal and the process of manufacture begun. There are several ways in which this transfer is effected, depending on the character of the work and the nature of the material. Intricate designs on the more expensive metals are sometimes reproduced by means of carbon tracing paper. That is, the carbon paper is laid face down on the metal and the detail carefully adjusted over the carbon; if large, the detail is steadied with weights, so that it will not move, and the outline of the pattern is then gone over with a stylus or a scratch awl. This causes all lines that have been thus traced to appear on the metal, and the work of cutting out may then proceed.

When the work is too large, or of such a nature that it is not considered desirable to trace the lines of the pattern in this manner, it is a common practice to lay the detail paper directly on the metal, steadying it with weights, and then, with a sharp scratch awl, to punch light holes through the paper at the principal points of the drawing. If the scratch awl is lightly tapped with a hammer or mallet at each point thus taken, slight indentations are made on the metal; when the paper is removed, the pattern may be reproduced on the metal by drawing lines with scratch awl and straight-edge between points thus designated. In case the pattern is curved in outline, it is customary to make similar indentations along the outline at frequent intervals; care should be taken that these points are closely spaced, so as to enable

Digitized by Google

the patterncutter to follow the line of curvature with accuracy. Lines on which bends are to appear in the finished work are usually designated by punch marks on the metal, and it is to distinguish such lines that the circular indicators described in *Development of Surfaces* are added to the drawing, the punch mark usually being made on the line at the center of this circle. After the principal points of the pattern have thus been fixed on the metal and while the lines are being drawn with the scratch awl, the draftsman should have the detail opened before him, and, before attempting to cut the metal, he should carefully compare the outline on the metal with that of the detail. Any lines that have been incorrectly drawn may thus be detected and the error rectified before the metal is cut.

**17. How Patterns Are Marked.**—When a number of differently shaped patterns are required for any construction, and any number of pieces are to be cut by hand methods, it is essential that such number shall be distinctly

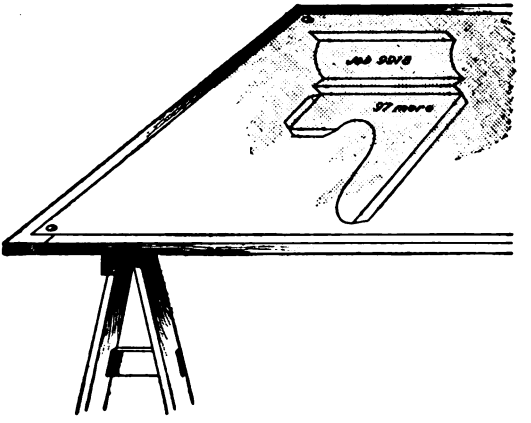

FIG. 11.

indicated on each pattern. Chalk is not desirable for this purpose, although frequently used; but, since it is easily rubbed off and the mark thus destroyed, it is better to mark such metals as will admit by plain and indelible marks.

Digitized by Google

Workers in galvanized iron use for this purpose a solution of sulphate of copper, or *bluestone*, as it is commonly called; they usually provide themselves with a small bottle of this solution and write on the metal with a hardwood stick, the point of which is frequently dipped in the liquid. If to this solution a small quantity of muriatic acid is added, it may be used on copper in a similar manner. Tin may be marked with soap or with an ink made of black asphalt reduced to the proper consistency with turpentine.

When work on several contracts is undertaken in the shop at the same time, the patterns for each job should be distinguished by the contract number, in order to avoid confusion. The number of pieces that are to be cut after each pattern should also be distinctly marked in the manner indicated in Fig. 11, which shows a pattern for a certain piece used in a cornice, properly marked and ready for the cutters.

No one system of marking can be applied to all classes of sheet-metal work, and the draftsman is therefore left to determine the plan best adapted to his needs. He should always study to avoid ambiguity and endeavor to leave his work in such shape that no possible chance is left for misleading the workman.

## TABLES.

### GAUGES FOR SHEET METAL.

**18.** The subject of gauging metal plates is one that has proved very perplexing to manufacturers; and, while the adoption of the United States standard gauge for iron and steel sheets has simplified matters relating to these products, it may be stated that there is a general tendency among intelligent mechanics to do away entirely with gauge numbers and specify all metals by their actual thicknesses in decimal parts of an inch. Such measurements are far more

Digitized by Google

satisfactory, both to the trade worker and to the manufacturer, and greatly lessen the liability to error that arises from imperfect gauges and from the use of gauges made by different firms.

On this subject, Trautwine says: "No trade stupidity is more thoroughly senseless than the adherence to the various Birmingham, Lancashire, etc. gauges, instead of at once denoting the thickness and diameter of sheets, wire, etc. by the parts of an inch, as has long been suggested * * * * To avoid mistakes that are very apt to occur from the number of gauges in use and from the absurd practice of applying the same gauge number to different thicknesses of different metals in different towns, it is best to ignore them all, and, in giving orders, to define the diameter of wire and the thickness of sheet metal by parts of an inch."

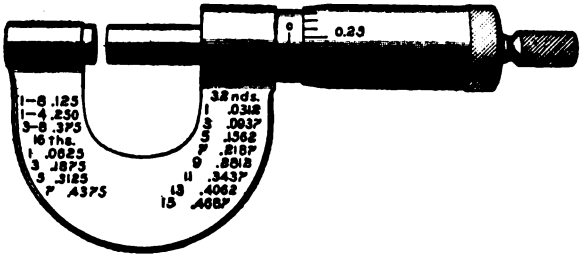


FIG. 12.

The *micrometer*, Fig. 12, is an instrument for obtaining accurate measurements of sheet metal and wire, and is now in very extensive use; micrometers are sold by several manufacturers of fine tools at a price not greatly in excess of the old form of wire gauges shown in Fig. 13, and are much to be preferred. Micrometers are usually graduated to read thousandths of an inch, but one-half and one-quarter thousandths may be readily estimated. They are very simple, and any person of ordinary intelligence can learn to use them in a very few minutes. Unlike the gauges shown in Fig. 13, they are provided with appliances for taking up wear and for readjustment.

Digitized by Google

In the following tables of gauges, the actual thickness in decimal parts of an inch is given opposite each number of the gauge, and it will be readily seen that if the workman is provided with a micrometer, he has a means of obtaining instantly the numbers of *any* of the various gauges made by different manufacturers, or of different metals; in such comparisons, the micrometer is an invaluable instrument in the hands of a workman that has to deal with different sheet metals or with wire.

The absurdity of continuing to designate the thickness of sheet metal by arbitrary gauge numbers is apparent when the student considers that hardly any two metals are judged by the same standard. Thus, we have the United States standard gauge for iron and steel; Brown & Sharpe's for brass and aluminum; a special gauge for zinc; still another

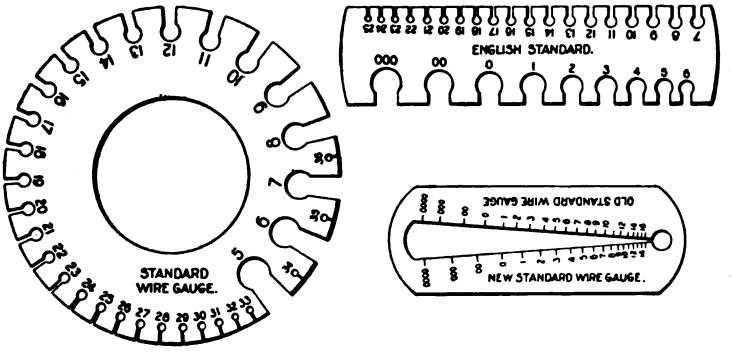


FIG. 13.

for Russia iron; the Birmingham gauge for precious metals; Washburn & Moen's for wire, etc. The dangers that lurk in the use of these arbitrary gauges are clearly indicated in the following extract taken from a circular issued by a prominent firm of sheet-metal manufacturers:

"In regard to ordinary wire gauges, they are notoriously inaccurate, because they cannot be made accurate and be at all salable.

"We have two new gauges in our possession that were kept in our offices for purposes of comparison, and to

Digitized by Google

prevent their wearing they were not allowed to go into the mills.

"In a recent case, a sample under discussion measured on one gauge tight 23, and on the other light 24, and our customer said it was neither by his gauge, and did not suit him anyhow.

"One of our new gauges has its No. 23 so much larger than its No. 22 that the difference can be easily detected by the naked eye; yet No. 23 ought to be two to four thousandths smaller than No. 22.

"If we were to roll No. 23 by that gauge, how would our customer get what he wanted unless his gauge accidentally contained the same blunder? Yet our gauge is a new one, stamped with the maker's name, and cost about six dollars.

"Another trouble is with the wearing of the gauges, for which there is no remedy; and we imagine that no man ever throws away a gauge because it is worn out. On the contrary, it represents an outlay of six dollars; he is used to it; he measures everything by it; and he is angry when anything does not measure to suit it. A still more serious difficulty arises from a very common mode of ordering. We frequently have orders for such a gauge, 'light' or 'tight,' 'full' or 'scant,' 'heavy' or 'easy'; or such a number and one-half, for instance 15½.

"This latter is terribly confusing to a roller; he almost always takes it to mean that it is to be thicker than the whole number, and is pretty certain to make 14½ for 15½, if he is not warned beforehand.

"* * * * There is a very simple way out of this whole snarl, and that is to abandon fixed gauges and numbers altogether. Micrometer sheet-metal gauges cost less than a common gauge, or no more. They measure thousandths of an inch very accurately, and even a quarter of a thousandth may be very neatly measured. * * * * Our works are fully supplied with these instruments, and we urge all parties in ordering to give us dimensions and not numbers."

Digitized by Google

### COMPARISON OF GAUGES.

**19.** A comparison of the four principal gauges in common use is shown in Table I, and it will be noticed that a wide difference exists as to the relative thickness of gauge numbers; thus, No. 20 by the United States standard gauge is designated as .0375 inch, by the Brown & Sharpe gauge as .031961 inch, by the Birmingham gauge as .035 inch, and by the Washburn & Moen gauge as .0348 inch. The need for specifying the name of the gauge used, or, better still, to give, in bills of material, all measurements in decimal parts of an inch, is at once apparent.

---

### GALVANIZED IRON.

**20.** It is generally well understood that **galvanized iron** is merely black iron or steel coated with zinc, or *spelter*, as it is called by the manufacturers. The black sheets are dipped into a bath of the molten spelter and are then passed, while hot, through squeezing rolls that remove all superfluous metal. The iron or steel surface is thus protected by a coating of metal not readily oxidized when exposed to the weather, and, on this account, galvanized iron is in general use for a variety of purposes. All mills in this country that produce this material have adopted the United States standard gauge for their uncoated sheets, and it is customary, when it is desired to ascertain the weight of the finished galvanized iron, to add 2½ ounces per square foot for the weight of the coating. The additional thickness thus attained is inappreciable, and, in the usual operations of the sheet-metal worker, need not be considered.

In addition to galvanized iron, black sheets are coated with alloys and sold under special trade names, as *kalamein*, *aluminum-coated sheets*, *leaded iron*, etc., but the same gauges and measurements are used as in the case of the regular galvanized-iron sheets.

Digitized by Google

# TABLE I.

## COMPARISON OF GAUGES.

| Number of Gauge. | Dimensions in Decimal Parts of an Inch. | | | | Number of Gauge. |
|---|---|---|---|---|---|
| | U.S Standard. | American, or Brown & Sharpe. | Birmingham, or Stubs. | Washburn & Moen Mfg. Co. | |
| 0000000 | .5 | | | .49 | 0000000 |
| 000000 | .46875 | | | .46 | 000000 |
| 00000 | .4375 | | | .43 | 00000 |
| 0000 | .40625 | .46 | .454 | .3938 | 0000 |
| 000 | .375 | .40964 | .425 | .3625 | 000 |
| 00 | .34375 | .3648 | .38 | .331 | 00 |
| 0 | .3125 | .32486 | .34 | .3065 | 0 |
| 1 | .28125 | .2893 | .3 | .283 | 1 |
| 2 | .265625 | .25763 | .284 | .2625 | 2 |
| 3 | .25 | .22942 | .259 | .2437 | 3 |
| 4 | .234375 | .20431 | .238 | .2253 | 4 |
| 5 | .21875 | .18194 | .22 | .207 | 5 |
| 6 | .203125 | .16202 | .203 | .192 | 6 |
| 7 | .1875 | .14428 | .18 | .177 | 7 |
| 8 | .171875 | .12849 | .165 | .162 | 8 |
| 9 | .15625 | .11443 | .148 | .1483 | 9 |
| 10 | .140625 | .10189 | .134 | .135 | 10 |
| 11 | .125 | .090742 | .12 | .1205 | 11 |
| 12 | .109375 | .080808 | .109 | .1055 | 12 |
| 13 | .09375 | .071961 | .095 | .0915 | 13 |
| 14 | .078125 | .064084 | .083 | .08 | 14 |
| 15 | .0703125 | .057068 | .072 | .072 | 15 |
| 16 | .0625 | .05082 | .065 | .0625 | 16 |
| 17 | .05625 | .045257 | .058 | .054 | 17 |
| 18 | .05 | .040303 | .049 | .0475 | 18 |
| 19 | .04375 | .03589 | .042 | .041 | 19 |
| 20 | .0375 | .031961 | .035 | .0348 | 20 |
| 21 | .034375 | .028462 | .032 | .03175 | 21 |
| 22 | .03125 | .025347 | .028 | .0286 | 22 |
| 23 | .028125 | .022571 | .025 | .0258 | 23 |
| 24 | .025 | .0201 | .022 | .023 | 24 |
| 25 | .021875 | .0179 | .02 | .0204 | 25 |
| 26 | .01875 | .01594 | .018 | .0181 | 26 |
| 27 | .0171875 | .014195 | .016 | .0173 | 27 |
| 28 | .015625 | .012641 | .014 | .0162 | 28 |
| 29 | .0140625 | .011257 | .013 | .015 | 29 |
| 30 | .0125 | .010025 | .012 | .014 | 30 |
| 31 | .0109375 | .008928 | .01 | .0132 | 31 |
| 32 | .01015625 | .00795 | .009 | .0128 | 32 |
| 33 | .009375 | .00708 | .008 | .0118 | 33 |
| 34 | .00859375 | .006304 | .007 | .0104 | 34 |
| 35 | .0078125 | .005614 | .005 | .0095 | 35 |
| 36 | .00703125 | .005 | .004 | .009 | 36 |
| 37 | .006640625 | .004453 | | .0085 | 37 |
| 38 | .00625 | .003965 | | .008 | 38 |
| 39 | | .003531 | | .0075 | 39 |
| 40 | | .003144 | | .007 | 40 |

Digitized by Google

# TABLE II.

## UNITED STATES STANDARD GAUGE.

| Number of Gauge. | Thickness. | | Weight. | |
|---|---|---|---|---|
| | Fractional Parts of an Inch (approx.). | Decimal Parts of an Inch (approx.). | Per Sq. Ft. in Ounces (avoir.). | Per Sq. Ft. in Pounds. (avoir.). |
| 0000000 | $\frac{1}{2}$ | .5 | 320 | 20. |
| 000000 | $\frac{15}{32}$ | .46875 | 300 | 18.75 |
| 00000 | $\frac{7}{16}$ | .4375 | 280 | 17.5 |
| 0000 | $\frac{13}{32}$ | .40625 | 260 | 16.25 |
| 000 | $\frac{3}{8}$ | .375 | 240 | 15. |
| 00 | $\frac{11}{32}$ | .34375 | 220 | 13.75 |
| 0 | $\frac{5}{16}$ | .3125 | 200 | 12.5 |
| 1 | $\frac{9}{32}$ | .28125 | 180 | 11.25 |
| 2 | $\frac{17}{64}$ | .265625 | 170 | 10.625 |
| 3 | $\frac{1}{4}$ | .25 | 160 | 10. |
| 4 | $\frac{15}{64}$ | .234375 | 150 | 9.375 |
| 5 | $\frac{7}{32}$ | .21875 | 140 | 8.75 |
| 6 | $\frac{13}{64}$ | .203125 | 130 | 8.125 |
| 7 | $\frac{3}{16}$ | .1875 | 120 | 7.5 |
| 8 | $\frac{11}{64}$ | .171875 | 110 | 6.875 |
| 9 | $\frac{5}{32}$ | .15625 | 100 | 6.25 |
| 10 | $\frac{9}{64}$ | .140625 | 90 | 5.625 |
| 11 | $\frac{1}{8}$ | .125 | 80 | 5. |
| 12 | $\frac{7}{64}$ | .109375 | 70 | 4.375 |
| 13 | $\frac{3}{32}$ | .09375 | 60 | 3.75 |
| 14 | $\frac{5}{64}$ | .078125 | 50 | 3.125 |
| 15 | $\frac{9}{128}$ | .0703125 | 45 | 2.8125 |
| 16 | $\frac{1}{16}$ | .0625 | 40 | 2.5 |
| 17 | $\frac{9}{160}$ | .05625 | 36 | 2.25 |
| 18 | $\frac{1}{20}$ | .05 | 32 | 2. |
| 19 | $\frac{7}{160}$ | .04375 | 28 | 1.75 |
| 20 | $\frac{3}{80}$ | .0375 | 24 | 1.5 |
| 21 | $\frac{11}{320}$ | .034375 | 22 | 1.375 |
| 22 | $\frac{1}{32}$ | .03125 | 20 | 1.25 |
| 23 | $\frac{9}{320}$ | .028125 | 18 | 1.125 |
| 24 | $\frac{1}{40}$ | .025 | 16 | 1. |
| 25 | $\frac{7}{320}$ | .021875 | 14 | .875 |
| 26 | $\frac{3}{160}$ | .01875 | 12 | .75 |
| 27 | $\frac{11}{640}$ | .0171875 | 11 | .6875 |
| 28 | $\frac{1}{64}$ | .015625 | 10 | .625 |
| 29 | $\frac{9}{640}$ | .0140625 | 9 | .5625 |
| 30 | $\frac{1}{80}$ | .0125 | 8 | .5 |
| 31 | $\frac{7}{640}$ | .0109375 | 7 | .4275 |
| 32 | $\frac{13}{1280}$ | .01015625 | 6½ | .40625 |
| 33 | $\frac{3}{320}$ | .009375 | 6 | .375 |
| 34 | $\frac{11}{1280}$ | .00859375 | 5½ | .34375 |
| 35 | $\frac{5}{640}$ | .0078125 | 5 | .3125 |
| 36 | $\frac{9}{1280}$ | .00703125 | 4½ | .28125 |
| 37 | $\frac{17}{2560}$ | .006640625 | 4¼ | .265625 |
| 38 | $\frac{1}{160}$ | .00625 | 4 | .25 |

NOTE.—For the purpose of securing uniformity of gauge throughout the United States, Congress, on March 3, 1893, adopted the above as the Legal Standard for determining the thickness of uncoated iron and steel sheets, allowing a variation of 2½ per cent., either above or below, for practical use and application.

Digitized by Google

### SHEET COPPER.

**21.** Unlike most other metals, the various weights of sheet copper are designated by the number of ounces contained in a square foot of the sheet; thus, 16-ounce copper is of such thickness that a square foot weighs 16 ounces.

It should be stated, however, that weights heavier than 64 ounces are customarily designated by the number of pounds contained in a sheet 30 inches by 60 inches; thus, a 30″ × 60″ sheet of 64-ounce copper weighs 50 pounds, and, in trade parlance, is known as a 50-pound sheet, the size (30″ × 60″) being understood. Any desired size and any required weight may be obtained from the sheet mills, but such heavy gauges are always referred to the standard size for their trade designation. Both hard, or cold-rolled, copper and soft, or hot-rolled, copper are known by the same standard.

The manufacturers of sheet copper have, in late years, adopted a uniform scale of prices for their sheets. These prices are arranged so that there is no change within the limits of certain sizes. Lists of such sizes, together with the prices, are issued by the manufacturers at frequent intervals, according to the fluctuations of the market; a copy of such list should be in the possession of every patterncutter, in order that he may so plan his work as to use the lower-priced sizes wherever possible.

Table III gives the nearest United States standard gauge number for the weights commonly used, together with the thickness in decimal parts of an inch.

---

### SHEET ZINC.

**22.** **Sheet zinc** is rolled to an arbitrary gauge adopted by the firms controlling its manufacture. Little need be said concerning the zinc gauge, except that its existence affords still another argument in favor of the adoption of the decimal system of designating all sheet metals.

Digitized by Google

## TABLE III.

APPROXIMATE GAUGE NUMBERS FOR COPPER.

| Ounces per Sq. Ft. | U. S. Gauge Number (approx.). | Thickness. Inch. | Ounces per Sq. Ft. | U. S. Gauge Number (approx.). | Thickness. Inch. |
|---|---|---|---|---|---|
| 5 | 38 | .00685 | 28 | 20 | .03835 |
| 6 | 35 | .00821 | 30 | 19 | .0412 |
| 7 | 33 | .00958 | 32 | 19 | .0438 |
| 8 | 31 | .01095 | 34 | 18 | .0465 |
| 9 | 30 | .01232 | 36 | 18 | .0494 |
| 10 | 29 | .01370 | 40 | 17 | .0549 |
| 11 | 28 | .01547 | 44 | 16 | .0604 |
| 12 | 27 | .01643 | 48 | 15 | .0658 |
| 13 | 26 | .01780 | 52 | 15 | .0712 |
| 14 | 26 | .01917 | 56 | 14 | .0767 |
| 15 | 25 | .02052 | 60 | 14 | .0822 |
| 16 | 25 | .02185 | 64 | 13 | .0876 |
| 18 | 24 | .02465 | 72 | 12 | .0984 |
| 20 | 23 | .02748 | 80 | 12 | .1095 |
| 22 | 22 | .03015 | 88 | 11 | .1205 |
| 24 | 22 | .03290 | 96 | 10 | .1315 |
| 26 | 21 | .03551 | | | |

REMARK.—To find the thickness and gauge of additional weights, multiply the number of ounces per square foot by .00136843; the result is the thickness in decimal parts of an inch, and by comparison with that column in the table of United States standard gauge, the corresponding number may be found. As in the case of other metals, decimal parts of an inch are preferably stated when bills of material are drawn by the draftsman.

## RUSSIA SHEET IRON.

**23. Russia sheet iron** was formerly exclusively used for locomotive jackets, stove bodies, etc., and as it was imported from Russia it was natural that the foreign gauge numbers



Digitized by Google

by which it was rolled should be used here to designate the various thicknesses. Planished iron and steel is now made by American manufacturers; it is superior in tensile strength and fully as finely finished as the imported sheet, although

## TABLE IV.

### GAUGES AND WEIGHTS OF SHEET ALUMINUM.

| No. | B. & S. Gauge. Decimal Parts of an Inch. | Weight per Square Foot Aluminum. Pounds. | No. | B. & S. Gauge. Decimal Parts of an Inch. | Weight per Square Foot Aluminum. Pounds. |
|---|---|---|---|---|---|
| 0000 | .46 | 6.406 | 20 | .032 | .445 |
| 000 | .41 | 5.704 | 21 | .028 | .396 |
| 00 | .365 | 5.08 | 22 | .025 | .353 |
| 0 | .325 | 4.524 | 23 | .023 | .314 |
| 1 | .289 | 4.029 | 24 | .02 | .28 |
| 2 | .258 | 3.588 | 25 | .018 | .249 |
| 3 | .229 | 3.195 | 26 | .016 | .222 |
| 4 | .204 | 2.845 | 27 | .014 | .197 |
| 5 | .182 | 2.534 | 28 | .013 | .176 |
| 6 | .162 | 2.256 | 29 | .011 | .157 |
| 7 | .144 | 2.009 | 30 | .01 | .14 |
| 8 | .128 | 1.789 | 31 | .009 | .124 |
| 9 | .114 | 1.594 | 32 | .00795 | .1107 |
| 10 | .102 | 1.418 | 33 | .00708 | .0985 |
| 11 | .091 | 1.264 | 34 | .0063 | .0877 |
| 12 | .081 | 1.126 | 35 | .0056 | .0782 |
| 13 | .072 | 1.002 | 36 | .005 | .0696 |
| 14 | .064 | .892 | 37 | .00445 | .062 |
| 15 | .057 | .795 | 38 | .00396 | .0552 |
| 16 | .051 | .708 | 39 | .00353 | .0491 |
| 17 | .045 | .63 | 40 | .00314 | .0438 |
| 18 | .04 | .561 | 41 | .0028 | |
| 19 | .036 | .5 | 42 | .00249 | |

Digitized by Google

for certain purposes there is a sufficient demand for Russia iron to warrant jobbers in handling this product.

## TABLE V.

### ILLINOIS ZINC COMPANY'S STANDARD GAUGE.

| Gauge Number. | Weight Per Square Foot. Pounds. | Thickness. Inch. | U. S. Gauge Number (approx.). |
|---|---|---|---|
| 1 | .07 | .00186 | |
| 2 | .15 | .004 | |
| 3 | .22 | .00587 | 38 |
| 4 | .30 | .008 | 35 |
| 5 | .37 | .011 | 32 |
| 6 | .45 | .012 | 30 |
| 7 | .52 | .014 | 29 |
| 8 | .60 | .016 | 28 |
| 9 | .67 | .018 | 26 |
| 10 | .75 | .020 | 25 |
| 11 | .90 | .024 | 24 |
| 12 | 1.05 | .028 | 23 |
| 13 | 1.20 | .032 | 22 |
| 14 | 1.35 | .036 | 20 |
| 15 | 1.50 | .040 | 19 |
| 16 | 1.68 | .045 | 19 |
| 17 | 1.87 | .050 | 18 |
| 18 | 2.06 | .055 | 17 |
| 19 | 2.25 | .060 | 16 |
| 20 | 2.62 | .070 | 15 |
| 21 | 3.00 | .080 | 14 |
| 22 | 3.37 | .090 | 13 |
| 23 | 3.75 | .100 | 12 |
| 24 | 4.70 | .125 | 11 |
| 25 | 9.40 | .250 | 3 |
| 26 | 14.00 | .375 | 00 |

Digitized by Google

The table here given applies only to the genuine Russia iron, as locomotive-jacket iron, planished iron, and steel of American manufacture are gauged by the United States standard gauge.

### TABLE VI.

APPROXIMATE GAUGE NUMBER FOR RUSSIA SHEET IRON.

| Russian Gauge Number. | U. S. Gauge Number (approx.). | Weight per Sheet (28"×56"). Pounds. |
|---|---|---|
| 16 | 21 | 14½ |
| 13 | 23 | 12 |
| 12 | 24 | 11 |
| 11 | 25 | 10 |
| 10 | 26 | 9 |
| 9 | 27 | 8 |
| 8 | 28 | 7¼ |

### TIN PLATES.

**24.** Many conflicting terms are used with reference to **tin plates,** or *sheet tin*, as it is usually, though erroneously, called, and few—even among the "fraternity"—are aware of the correct meaning of the various names made use of by manufacturers and jobbers. Cokes, charcoals, and ternes are referred to indiscriminately, although roofing plates are now generally understood when ternes are designated. Bright plates are sheets of steel, or, as called by the manufacturers, *black plates*, coated with pure tin, while the coating of the steel sheet in the case of ternes is an alloy of tin and lead. As ternes are used principally for roofing purposes, they are now generally known by the term *roofing plate*.

Formerly, iron was used in place of steel for the manufacture of the black plate, and since there were two distinct grades of sheet iron—called, respectively, *coke iron* and

Digitized by Google

*charcoal iron*, according as coke or charcoal was used for fuel in the furnaces—so two grades of bright and terne plates were known in the trade. Coke iron was used for the cheaper plates, and was known to be more brittle than the more expensive charcoal plates. For the past ten years or more, steel sheets have been used exclusively in the manufacture of tin plates, and the terms *coke* and *charcoal* have come to mean simply a difference in the amount of coating received by the black plate.

Bessemer steel is ordinarily supplied by the manufacturers, but when a plate of greater tensile strength is required, open-hearth steel may be had at a slight advance in cost. Many different weights of coating are furnished by the manufacturers, from an ordinary bright coke plate, or *J. B.* grade, at 2½ pounds per box of 112 sheets of standard size plates (14″ × 20″), up to the best charcoal coating, which is 6 pounds to the same size box.

The old Welsh names have been retained to indicate the amount of coating in the so-called charcoal grades. Thus, a 3-pound coating is called an *Allaway* finish, or grade; a 4-pound coating, *Melyn;* and a 5-pound coating is termed *Calland* grade. In addition to these regular weights, the manufacturers furnish bright plates at special order with any desired coating in even pounds or half pounds, up to and including 6 pounds per box.

Terne plates, on account of their exposure to the action of the elements, are coated more heavily than bright plates. The lightest weight, or coke coating, for ternes is 4 pounds to the box, and various grades are manufactured between that weight and the best charcoal coating of 20 pounds per box. The standard box of tin plates consists of 112 sheets (14″ × 20″), and this size is considered a basis by manufacturers when quoting prices. A net weight per box of 108 pounds is now considered a full-weight "IC" plate; 100 pounds is the next grade lighter, sometimes designated "ICL"; still lighter plates are also furnished for special purposes of manufacture, graded from 5 pounds per box down to about 65 pounds net weight.

Digitized by Google

A very thin plate, called *Taggers'* tin, is also furnished, and the usual gauges are Nos. 36, 38, and 40. Taggers' tin is differently packed; the standard weight is 112 pounds

## TABLE VII.

**STANDARD WEIGHTS, GAUGES, AND SIZES OF TIN PLATES.**

| Size. Inches. | Trade Title. | Sheets per Box. | U S. Gauge Number (approx.). | Net Weight per Box. Pounds. |
|---|---|---|---|---|
| 14 × 20 | ICL | 112 | 31 | 100 and lighter |
| 14 × 20 | IC | 112 | 30 | 108 or 107 |
| 14 × 20 | IXL | 112 | 29 | 128 |
| 14 × 20 | IX | 112 | 28 | 135 or 136 |
| 14 × 20 | IXX | 112 | 27 | 156 |
| 14 × 20 | IXXX | 112 | 26 | 176 |
| 14 × 20 | IXXXX | 112 | 25 | 196 |
| 12½ × 17 | DC (= IX) | 100 | 28 | 94 |
| 12½ × 17 | DX (= IXXX) | 100 | 25 | 122 |
| 12½ × 17 | DXX (= IXXXXX) | 100 | 24 | 142 |
| 12½ × 17 | DXXX (= IXXXXXX) | 100 | 23 | 162 |
| 12½ × 17 | DXXXX (= IXXXXXXX) | 100 | 22 | 182 |

## TABLE VIII.

**WEIGHT PER SQUARE FOOT OF BOILER-PLATE IRON.**

| Thickness. Inches. | Weight. Pounds. | Thickness. Inches. | Weight. Pounds. | Thickness Inches. | Weight. Pounds. |
|---|---|---|---|---|---|
| $\frac{1}{4}$ | 20.0 | $1\frac{1}{16}$ | 42.5 | $1\frac{9}{16}$ | 62.5 |
| $\frac{9}{16}$ | 22.5 | $1\frac{1}{8}$ | 45.0 | $1\frac{5}{8}$ | 65.0 |
| $\frac{5}{8}$ | 25.0 | $1\frac{3}{16}$ | 47.5 | $1\frac{11}{16}$ | 67.5 |
| $\frac{11}{16}$ | 27.5 | $1\frac{1}{4}$ | 50.0 | $1\frac{3}{4}$ | 70.0 |
| $\frac{3}{4}$ | 30.0 | $1\frac{5}{16}$ | 52.5 | $1\frac{13}{16}$ | 72.5 |
| $\frac{13}{16}$ | 32.5 | $1\frac{3}{8}$ | 55.0 | $1\frac{7}{8}$ | 75.0 |
| $\frac{7}{8}$ | 35.0 | $1\frac{7}{16}$ | 57.5 | $1\frac{15}{16}$ | 77.5 |
| $\frac{15}{16}$ | 37.5 | $1\frac{1}{2}$ | 60.0 | 2 | 80.0 |
| 1 | 40.0 | | | | |

Digitized by Google

per box, and a sufficient number of sheets are added to bring the weight up to this standard; thus, a box of No. 36 gauge Taggers' tin weighs 112 pounds and contains 180 sheets (14″ × 20″). No. 38 gauge is the same net weight per box, but contains 225 sheets, etc.

Table VII contains the regular sizes, with approximate gauge numbers and net weights.

## SHEET LEAD AND SHEET TIN.

**25.** **Sheet lead** and **sheet tin** are used for a variety of purposes, one of the principal uses being for tank linings. The sheet tin here referred to is the pure sheet metal, and is not to be confounded with the tin-coated iron plates that are usually referred to as sheet tin, the latter being an erroneous term.

### TABLE IX.

WEIGHT AND THICKNESS OF SHEET LEAD.

| Weight per Square Foot. Pounds. | Thickness. Fractional Parts of an Inch. | Thickness. Decimal Parts of an Inch. |
|---|---|---|
| 1. | $\frac{1}{64}$ | .015625 |
| 1.5 | $\frac{1}{43}$ | .0233 |
| 2. | $\frac{1}{32}$ | .03125 |
| 2.5 | $\frac{1}{24}$ | .041625 |
| 3. | $\frac{3}{64}$ | .046875 |
| 4. | $\frac{1}{16}$ | .0625 |
| 5. | $\frac{5}{64}$ | .078125 |
| 6. | $\frac{3}{32}$ | .09375 |
| 8. | $\frac{1}{8}$ | .125 |
| 16. | $\frac{1}{4}$ | .25 |
| 32. | $\frac{1}{2}$ | .5 |

### TABLE X.

WEIGHT AND THICKNESS OF SHEET TIN.

| Weight per Square Foot. Pounds. | Thickness. Fractional Parts of an Inch. | Thickness. Decimal Parts of an Inch. |
|---|---|---|
| 1. | $\frac{1}{40}$ | .025 |
| 1.5 | $\frac{1}{27}$ | .037 |
| 2. | $\frac{1}{20}$ | .05 |
| 2.5 | $\frac{1}{16}$ | .0625 |
| 3. | $\frac{1}{13}$ | .0769 |
| 3.5 | $\frac{1}{11}$ | .0909 |
| 4. | $\frac{1}{10}$ | .1 |
| 4.5 | $\frac{1}{9}$ | .1111 |
| 5. | $\frac{1}{8}$ | .125 |
| 10. | $\frac{1}{4}$ | .25 |
| 20. | $\frac{1}{2}$ | .5 |

Digitized by Google

# TABLE XI.

## SIZES, WEIGHTS, AND LENGTHS OF IRON WIRE.*

| Number of Washburn & Moen's Wire Gauge. | Diameter. Decimal Parts of an Inch. | Weight of 100 Feet. Pounds. | Weight of One Mile. Pounds. | Number of Feet in One Bundle of 63 Pounds. | Number of Feet in One Ton of 2,000 Pounds. |
|---|---|---|---|---|---|
| 0000000 | .49 | 63.63 | 3,360. | 99 | 3,143 |
| 000000 | .46 | 56.10 | 2,962. | 112 | 3,565 |
| 00000 | .43 | 49.01 | 2,588. | 129 | 4,081 |
| 0000 | .3938 | 40.94 | 2,162. | 154 | 4,885 |
| 000 | .3625 | 34.73 | 1,834. | 181 | 5,759 |
| 00 | .331 | 29.04 | 1,533. | 217 | 6,886 |
| 0 | .3065 | 27.66 | 1,460. | 228 | 7,230 |
| 1 | .283 | 21.23 | 1,121. | 296 | 9,425 |
| 2 | .2625 | 18.34 | 968. | 343 | 10,905 |
| 3 | .2437 | 15.78 | 833. | 399 | 12,674 |
| 4 | .2253 | 13.39 | 707. | 470 | 14,936 |
| 5 | .207 | 11.35 | 599. | 555 | 17,621 |
| 6 | .192 | 9.73 | 514. | 647 | 20,555 |
| 7 | .177 | 8.03 | 439. | 759 | 24,906 |
| 8 | .162 | 6.96 | 367. | 905 | 28,734 |
| 9 | .1483 | 5.08 | 306. | 1,086 | 34,483 |
| 10 | .135 | 4.83 | 255. | 1,304 | 41,408 |
| 11 | .1205 | 3.82 | 202. | 1,649 | 52,356 |
| 12 | .1055 | 2.92 | 154. | 2,158 | 68,493 |
| 13 | .0915 | 2.24 | 118. | 2,813 | 89,286 |
| 14 | .08 | 1.69 | 89. | 3,728 | 118,343 |
| 15 | .072 | 1.37 | 72. | 4,598 | 145,985 |
| 16 | .0625 | 1.05 | 55. | 6,000 | 190,476 |
| 17 | .054 | .77 | 41. | 8,182 | 259,740 |
| 18 | .0475 | .58 | 31. | 10,862 | 344,827 |
| 19 | .041 | .45 | 24. | 14,000 | 444,444 |
| 20 | .0348 | .32 | 17. | 19,687 | 625,000 |
| 21 | .03175 | .27 | 14. | 23,333 | 740,741 |
| 22 | .0286 | .21 | 11. | 30,000 | 952,381 |
| 23 | .0258 | .175 | 9.24 | 36,000 | 1,142,856 |
| 24 | .023 | .14 | 7.39 | 45,000 | 1,428,570 |
| 25 | 0204 | .116 | 6.124 | 54,310 | 1,724,125 |
| 26 | .0181 | .093 | 4.91 | 67,742 | 2,150,537 |
| 27 | .0173 | .083 | 4.382 | 75,903 | 2,409,616 |
| 28 | .0162 | .074 | 3.907 | 85,135 | 2,702,695 |
| 29 | .015 | .061 | 3.22 | 103,278 | 3,278,663 |
| 30 | .014 | .054 | 2.851 | 116,666 | 3,763,678 |
| 31 | .0132 | .05 | 2.64 | 126,000 | 3,999,996 |
| 32 | .0128 | .046 | 2.428 | 136,956 | 4,347,805 |
| 33 | .0118 | .037 | 1.953 | 170,270 | 5,405,391 |
| 34 | .0104 | .03 | 1.584 | 210,000 | 6,666,660 |
| 35 | .0095 | .025 | 1.32 | 252,000 | 7,999,992 |
| 36 | .009 | .021 | 1.161 | 286,363 | 9,090,879 |
| 37 | .0085 | .0188 | 1.04 | | |
| 38 | .008 | .0169 | .935 | | |
| 39 | .0075 | .0137 | .755 | | |
| 40 | .007 | .0119 | .659 | | |

* Washburn & Moen's gauge the standard.

Digitized by Google

## TABLE XII.

### WEIGHT OF FLAT BAR IRON PER LINEAL FOOT.

| Width. Inches. | Thickness. Inches. | | | | | | | | | |
|---|---|---|---|---|---|---|---|---|---|---|
| | 1/8 | 3/16 | 1/4 | 5/16 | 3/8 | 1/2 | 5/8 | 3/4 | 7/8 | 1 |
| 1/4 | .211 | .361 | .422 | .491 | .634 | | | | | |
| 3/8 | .26 | .42 | .51 | .64 | .784 | .9 | | | | |
| 1/2 | .316 | .471 | .633 | .79 | .95 | 1.26 | 1.58 | | | |
| 5/8 | .37 | .551 | .73 | .915 | 1.09 | 1.46 | 1.82 | 2.19 | | |
| 1 | .421 | .623 | .832 | 1.04 | 1.25 | 1.67 | 2.08 | 2.5 | 2.92 | |
| 1 1/8 | .475 | .7 | .94 | 1.17 | 1.41 | 1.88 | 2.34 | 2.81 | 3.28 | 3.75 |
| 1 1/4 | .524 | .782 | 1.04 | 1.3 | 1.56 | 2.08 | 2.60 | 3.12 | 3.64 | 4.17 |
| 1 3/8 | .574 | .86 | 1.15 | 1.43 | 1.72 | 2.29 | 2.86 | 3.44 | 4.01 | 4.58 |
| 1 1/2 | .631 | .94 | 1.25 | 1.56 | 1.88 | 2.5 | 3.13 | 3.75 | 4.38 | 5. |
| 1 5/8 | .682 | 1.02 | 1.35 | 1.69 | 2.03 | 2.71 | 3.38 | 4.01 | 4.74 | 5.42 |
| 1 3/4 | .73 | 1.09 | 1.46 | 1.82 | 2.19 | 2.92 | 3.65 | 4.37 | 5.10 | 5.83 |
| 2 | .831 | 1.24 | 1.67 | 2.08 | 2.5 | 3.33 | 4.17 | 5. | 5.83 | 6.67 |
| 2 1/4 | .945 | 1.41 | 1.88 | 2.34 | 2.81 | 3.75 | 4.69 | 5.63 | 6.51 | 7.5 |
| 2 1/2 | 1.04 | 1.56 | 2.08 | 2.6 | 3.12 | 4.17 | 5.21 | 6.25 | 7.29 | 8.33 |
| 2 3/4 | 1.14 | 1.72 | 2.29 | 2.86 | 3.44 | 4.59 | 5.73 | 6.87 | 8.02 | 9.17 |
| 3 | 1.25 | 1.87 | 2.5 | 3.12 | 3.75 | 5. | 6.25 | 7.5 | 8.75 | 10. |
| 3 1/4 | 1.35 | 2.03 | 2.71 | 3.38 | 4.07 | 5.42 | 6.77 | 8.12 | 9.48 | 10.83 |
| 3 1/2 | 1.46 | 2.19 | 2.92 | 3.65 | 4.38 | 5.83 | 7.29 | 8.75 | 10.21 | 11.61 |
| 3 3/4 | 1.56 | 2.34 | 3.12 | 3.9 | 4.69 | 6.25 | 7.81 | 9.37 | 10.94 | 12.5 |
| 4 | 1.67 | 2.5 | 3.33 | 4.17 | 5. | 6.67 | 8.33 | 10. | 11.67 | 13.33 |
| 4 1/2 | 1.87 | 2.81 | 3.75 | 4.69 | 5.63 | 7.5 | 9.38 | 11.25 | 13.13 | 15.6 |
| 5 | 2.08 | 3.13 | 4.17 | 5.21 | 6.25 | 8.34 | 10.42 | 12.5 | 14.59 | 16.67 |
| 6 | 2.5 | 3.75 | 5. | 6.25 | 7.5 | 10. | 12.50 | 15. | 17.50 | 20. |

Digitized by Google

## TABLE XIII.

### WEIGHT OF ROUND AND SQUARE ROLLED IRON.

| Side or Diameter. Inches. | Weight. Pounds per Foot. | | Side or Diameter. Inches. | Weight. Pounds per Foot. | |
|---|---|---|---|---|---|
| | Round. | Square. | | Round. | Square. |
| ⅛ | .041 | ..053 | 4⅛ | 45.174 | 57.517 |
| ¼ | .165 | .211 | 4¼ | 47.952 | 61.055 |
| ⅜ | .373 | .475 | 4⅜ | 50.815 | 64.700 |
| ½ | .663 | .845 | 4½ | 53.760 | 68.448 |
| ⅝ | 1.043 | 1.320 | 4⅝ | 56.788 | 72.305 |
| ¾ | 1.493 | 1.901 | 4¾ | 59.900 | 76.264 |
| ⅞ | 2.032 | 2.588 | 4⅞ | 62.220 | 80.333 |
| 1 | 2.654 | 3.380 | 5 | 66.350 | 84.480 |
| 1⅛ | 3.359 | 4.278 | 5⅛ | 69.731 | 88.784 |
| 1¼ | 4.147 | 5.280 | 5¼ | 73.172 | 93.168 |
| 1⅜ | 5.019 | 6.390 | 5⅜ | 76.700 | 97.657 |
| 1½ | 5.972 | 7.604 | 5½ | 80.304 | 102.240 |
| 1⅝ | 7.010 | 8.926 | 5⅝ | 84.001 | 106.953 |
| 1¾ | 8.128 | 10.352 | 5¾ | 87.776 | 111.756 |
| 1⅞ | 9.333 | 11.883 | 5⅞ | 91.290 | 116.671 |
| 2 | 10.616 | 13.520 | 6 | 95.552 | 121.664 |
| 2⅛ | 11.988 | 15.263 | 6⅛ | 103.704 | 132.040 |
| 2¼ | 13.440 | 17.112 | 6½ | 112.160 | 142.816 |
| 2⅜ | 14.975 | 19.066 | 6¾ | 120.960 | 154.012 |
| 2½ | 16.588 | 21.120 | 7 | 130.048 | 165.632 |
| 2⅝ | 18.293 | 23.292 | 7⅛ | 139.544 | 177.672 |
| 2¾ | 20.076 | 25.560 | 7½ | 149.328 | 190.136 |
| 2⅞ | 21.944 | 27.939 | 7¾ | 159.456 | 203.024 |
| 3 | 23.888 | 30.416 | 8 | 169.856 | 216.336 |
| 3⅛ | 25.926 | 33.010 | 8⅛ | 180.696 | 230.068 |
| 3¼ | 28.040 | 35.704 | 8½ | 191.808 | 244.220 |
| 3⅜ | 30.240 | 38.503 | 8¾ | 203.260 | 258.800 |
| 3½ | 32.512 | 41.408 | 9 | 215.040 | 273.792 |
| 3⅝ | 34.886 | 44.418 | 9⅛ | 227.152 | 289.220 |
| 3¾ | 37.332 | 47.534 | 9½ | 239.600 | 305.056 |
| 3⅞ | 39.864 | 50.756 | 9¾ | 252.376 | 321.330 |
| 4 | 42.464 | 54.084 | 10 | 265.400 | 327.920 |

Digitized by Google

Both of these metals, when rolled into sheets, are designated by the weight in pounds per square foot; thus, 4-pound sheet lead, which is perhaps the weight most used, is of such thickness that a square foot of the sheet weighs 4 pounds. Since tin is the lighter, sheets of that metal are thicker than lead sheets of corresponding weight.

The manufacturers of these sheets supply the product in rolls of various width, up to and including 9 feet wide. The lighter-weight sheets and the widths between 12 inches and 3½ feet are usually put up in boxed rolls containing 50, 100, or 150 pounds. Sheets 12 inches wide and narrower, of such weights as are usually required for press operations, are put on reels containing from 100 to 250 pounds of the metal, and will be found much more convenient to handle than the large sheets carried in stock by the jobbers.

---

## ROUGH AND RIBBED SKYLIGHT GLASS.

**26.** The following table will be found useful when computing the loads on skylight bars and their sustaining trusses. The glass made by different manufacturers varies somewhat in thickness, so that some allowance is necessary in certain cases, but for general use the figures given below will be found satisfactory.

### TABLE XIV.

WEIGHT OF GLASS.

| Thickness. Inch. | Weight per Sq. Ft. (approx.). Pounds. | Thickness. Inch. | Weight per Sq. Ft. (approx.). Pounds. |
|---|---|---|---|
| ⅛ | 1.5 | ½ | 6 |
| 3/16 | 2.5 | ¾ | 9 |
| ¼ | 3.5 | 1 | 12 |
| ⅜ | 4.75 | | |

Digitized by Google

### SPECIFIC GRAVITY AND WEIGHTS OF VARIOUS METALS.

**27.** The table on the following page gives the specific gravity of various metals together with the weight of a cubic inch of the metal. The numbers in the column of weights were calculated by multiplying the weight of a cubic foot of water at 62° F. (that is, 62.355 pounds) by the specific gravity of the substance and dividing the product by 1728, the number of cubic inches in one cubic foot. By the aid of this table, the weight of any sheet metal, or of a quantity of the metal in solid form, may be readily found. It is necessary to find the number of cubic inches contained in any given quantity and multiply this amount by the figures appearing in the column of weights, or, knowing the weight of a certain amount of metal, the weight of a similar amount of another metal may be found by proportion, by the aid of the figures in the column of specific gravities. For example, a vessel made of sheet copper weighs 18 ounces, and it is desired to find the weight of a similar article when made of silver; the specific gravity of sheet copper is found to be 8.9, and that of sheet silver 10.51; then, by proportion, 8.9 is to 10.51 as 18 is to the weight of silver. Multiplying the means, we have $10.51 \times 18 = 189.18$; then, dividing by one extreme gives the other extreme, or $189.18 \div 8.9 = 21.3$ ounces, the weight of the vessel when made of silver.

## INTRODUCTION TO PROBLEMS.

**28. General Statement.**—In order that the sixty practical pattern problems that are given in this Course may be studied systematically, they have been divided into three groups of twenty problems each. This section contains the problems of the first group, which consists of practical examples chosen mainly for the reason that they represent typical situations likely to be encountered by the "bench" hands of a sheet-metal-working establishment. In other words, the articles represented are those usually classed as

Digitized by Google

## TABLE XV.

### SPECIFIC GRAVITY AND WEIGHTS OF VARIOUS METALS.

| Names of Substances. | Specific Gravity. | Weight per Cubic Inch (Lb.). |
|---|---|---|
| Aluminum, sheet | 2.67 | .096 |
| Aluminum, cast | 2.56 | .092 |
| Antimony | 6.71 | .242 |
| Arsenic | 5.76 | .208 |
| Bismuth | 9.82 | .354 |
| Brass: | | |
| Copper 75, zinc 25, sheet | 8.45 | .305 |
| Copper 75, zinc 25, cast | 8.1 | .292 |
| Bronze: | | |
| Gun metal | 8.75 | .316 |
| Ordinary | 8.21 | .296 |
| Tobin | 8.38 | .302 |
| Calcium | 1.58 | .057 |
| Cobalt | 8.6 | .310 |
| Copper, sheet | 8.9 | .321 |
| Copper, cast | 8.7 | .314 |
| Gold, sheet | 19.36 | .699 |
| Gold, cast | 19.25 | .695 |
| Iridium, hammered | 23. | .830 |
| Iron, sheet | 7.704 | .278 |
| Iron, cast | 7.207 | .260 |
| Lead, sheet | 11.388 | .411 |
| Lead, cast | 11.352 | .410 |
| Mercury at 60° temperature | 13.57 | .490 |
| Nickel, sheet | 8.8 | .318 |
| Nickel, cast | 8.28 | .299 |
| Platinum, sheet | 22.07 | .796 |
| Silver, sheet | 10.51 | .379 |
| Silver, cast | 10.47 | .378 |
| Steel, sheet | 7.8 | .282 |
| Steel, cast | 7.84 | .283 |
| Tin, sheet | 7.4 | .267 |
| Tin, cast | 7.29 | .263 |
| Tungsten | 17. | .613 |
| Zinc, sheet | 7.19 | .260 |
| Zinc, cast (or spelter) | 6.86 | .248 |

Digitized by Google

tinware, or house-furnishing goods. While it is true that these problems refer particularly to the work of the tinsmith, they are equally deserving of study by the artisans of allied industries, for their principles are capable of wide application, and may, therefore, be adapted to many other cases of development.

**29. How the Examples Have Been Selected.**—As far as possible, an actual trade object forms the subject of each problem, and the sizes and dimensions to be worked out are conformed to proportions established in good practice. In the construction of the projection drawings, therefore, the student will derive much benefit, not only from the practice afforded, but in the fundamental principles of design as applied to the sheet-metal worker's trade. These problems are intended to equip the student for taking full charge of a shop or for producing working drawings and patterns. No work is introduced that is not liable to arise in the course of his experience as a sheet-metal pattern draftsman.

The problems have been selected with the purpose in view of furnishing the student with an opportunity to apply the fundamental principles in a variety of ways, and the following pages will be found full of suggestions that the ingenious draftsman will be able to convert and adapt to any other requirement liable to arise in his experience. The student that applies himself to a careful and persistent study of the several methods, as shown in their adaptation to the various problems, will then be able to produce, without difficulty, any pattern he may desire. Full and complete explanations are given of the reason for the adoption of each particular method, and if these are thoroughly mastered, the student will soon become skilful in solving any problem. The draftsman must possess, too, a ready imagination in order to conceive correctly the true position and relation of the parts of a given article. If he has the ability to do this, he can then proceed by the simple process of deduction, and, guided by his knowledge of projection drawing, can accomplish his object with facility and confidence.

Digitized by Google

**30. Use of Established Principles.**—The principles of construction previously introduced in *Practical Projection* and in *Development of Surfaces* form the entire basis for the solutions of the problems herein contained. Occasional deviations will be found, but in every such case the student should note that the change of method and its relations to principles already explained are pointed out. The plates drawn by the student in connection with the two preceding subjects will now have an increased value to him, for he will be able to trace in them many of the operations that he is now required to perform. Plates drawn by the student, which have been corrected and returned to him, possess a value for reference that cannot be overestimated; they are vastly more valuable to him than the printed plates sent out by the Schools. If he has preserved these plates, properly inked in, he has, within easy reach, principles of inestimable value in practical work.

**31. Difficulties Encountered by the Pattern Draftsman.**—There is perhaps no field of work that presents situations so varied and puzzling to the draftsman as the sheet-metal-working trades. In nearly every branch of this industry, a large proportion of the daily work consists of special cases that may or may not be encountered in the same form a second time. While it is true—as the student has already seen in *Development of Surfaces*—that the same general principles are used in the development of nearly all solids, yet the necessary operations are not always readily apparent. The drawings, therefore, may require some study on the part of the draftsman before he will be able to determine the exact course to pursue. But a thorough mastery of principles, with judgment and skill in applying them, will enable the student to cope with difficulties that appear insurmountable to one unskilled in the art of sheet-metal pattern drafting.

**32. How the Problems Are to be Studied.**—The problems should be taken in regular order and drawings constructed as called for by the text. These drawings are

Digitized by Google

intended for practice only, and are not to be sent to the Schools for correction. They should be drawn on detail paper of convenient size and in accordance with the dimensions given. Read over the text carefully before beginning to draw, in order that the entire scope of the problem may be well understood. Should difficulties be encountered in the construction of any of the drawings, do not hesitate to make use of the information blanks, and, if necessary, send in your work in order that we may render such assistance as is required. In selecting paper on which to make these drawings, choose such as will stand erasures without roughening. Paper as thin as practicable should be procured in order to save postage on drawings that the student must send to the Schools.

At the end of this section will be found specifications and full instructions for drawing an examination plate. It should be noted that no principles are called for by the examination problem that are not completely illustrated in some one of the problems in this section. If the student faithfully works out these problems, therefore, he will encounter no difficulty in drawing the examination plate.

## GROUP I: PATTERNS FOR TIN AND SHEET-IRON WARE.

### PROBLEM 1.

**33. To develop the patterns for a square pan whose sides have an equal flare.**

EXPLANATION.—A perspective illustration of a pan that answers this description is shown in Fig. 14. The trade term "square pans" is usually applied to such articles, although their dimensions are commonly not that of a perfect square. The

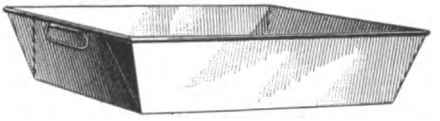

FIG. 14.

Digitized by Google

development of the required surfaces is a comparatively simple matter. The principal feature of the work consists in defining the outline of the corners so that, when formed as shown in Fig. 14, the upper edges of the folded parts will finish neatly under the wire. It will be seen that a pan thus made is water-tight without soldering, and since such pans are commonly made of black iron or tin, and are often subjected to a temperature higher than the melting point of solder, the construction herewith shown is important.

Although the drawings for this problem are to be made on the drawing board by the aid of the T square and other drawing implements, it will be seen that the work can be laid out with a steel square and dividers directly upon the sheet metal. This is true also of many of the problems that follow, and in the actual practice of the workshop many mechanics prefer this method, resorting to the drawing board only when an intricate solution is required.

The drawings, having a scale of 3 inches to the foot, are to represent a pan $9'' \times 18''$ at the lower base, 12 inches in vertical height, and $23'' \times 32''$ in size at the upper base; in other words, the pan is to have a flare of 7 inches on all sides. The construction is to be as indicated in Fig. 14, although the proportions are somewhat different from that of the pan there shown.

Construction.—Draw an elevation of the pan as shown by the trapezium $A\,B\,D\,C$, Fig. 15. Since, in this case, the sides have an equal flare, it makes no difference whether a side or an end view of the pan be represented in the elevation. At right angles to the base lines of the pan $A\,C$ and $B\,D$, draw the stretchout line $M\,N$, and on this line lay off the width of the surfaces, observing, however, that the width of base—that is, the distance $a'\,a''$, Fig. 15—here laid off must represent the opposite dimension to that shown in the elevation. In other words, if the 18-inch dimension is represented by the line $A\,C$ in the elevation, then the width of the space $a'\,a''$ on the stretchout must coincide with the other, or 9-inch, dimension. The width of the sides, that



Digitized by Google

is, the spaces $a'$ $b'$ and $a''$ $b''$, is made equal to the length of the line $A$ $B$ of the elevation. Draw lines parallel to $A$ $C$ through the points thus determined on the stretchout, and project developers from the elevation in the manner shown in Fig. 15, thus determining the location of the points $f$

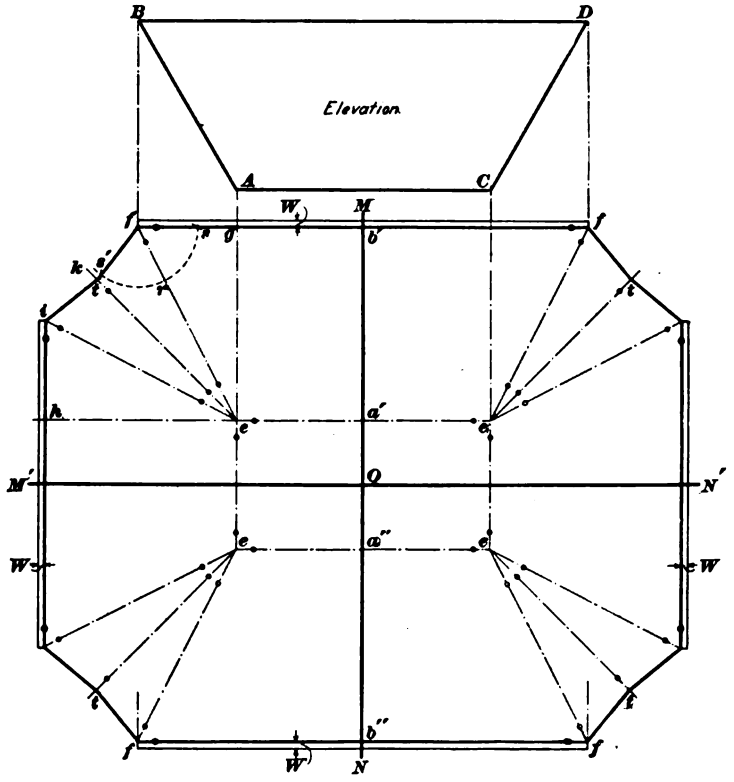


FIG. 15.

and $e$; complete this portion of the development by drawing the several lines $e$ $f$.

Since the "flare" of all sides of this pan is the same, another stretchout line $M'$ $N'$ may be drawn at right angles to $M$ $N$ in the manner shown in Fig. 15, and crossing $M$ $N$ at its central point $O$. On this line, lay off distances from

Digitized by Google

the lines $A\,e$ and $C\,e$ equal to the distance $a'\,b'$ of the line $M\,N$. Produce the line drawn through $a'$ to $h$, and make $h\,i$ equal to $f\,g$, afterwards repeating the operation at each of the four corners. The main body of the pan is now completed, and the next step is to provide for the extra stock at the corners. This stock, as already stated, must be so cut as to allow the folds of the metal to finish neatly under the wire. The manner in which this result is accomplished is shown in the upper left-hand corner of the pattern. Draw the line $e\,k$ so as to bisect the angle $f\,e\,i$; set the compasses to a radius slightly less than the vertical distance from the point $f$ to the line $e\,k$, and from $f$ as a center, describe a short arc in the manner shown; next, make $r\,s'$ equal to $r\,s$ and draw $f\,s'$, producing the line until it meets $e\,k$ in the point $t$. Complete the pattern as shown in Fig. 15, and when the metal is formed as shown in Fig. 14, it will be found that the upper edges of the folded stock will neatly coincide with the other edges of the pan. It is necessary, however, to add the amount required for the wire; this is equal to three-fourths of the circumference of the wire. Referring to the table of wire sizes, it is found that No. 6 wire measures .192 inch in diameter, or, as expressed in fractional parts of an inch, slightly more than $\frac{3}{16}$ inch. The circumference of this diameter is found from the table in *Arithmetic*, Part 9, to be .589, and three-fourths of this is approximately $\frac{7}{16}$ inch. This amount is therefore to be allowed for a wiring edge, as shown by the dimensions $W$ in Fig. 15, and the pattern is thus completed.

CAPACITY.—Only in rare cases is the draftsman asked to compute the volume of articles of this form, as orders for work of this description are usually accompanied by the exact dimensions required. Since, however, there is an occasional demand for the figures relating to the capacities of such pans, the method of ascertaining their volume will be considered. It will be seen that if the bases of the pan were square, the solid represented would be a frustum of a pyramid, and the rule given for such shapes would apply.

Digitized by Google

In this instance, the bases are oblong and the solid is what may be termed a *prismoid*. The application of the prismoidal formula is as follows: Area of lower base, $9'' \times 18'' = 162$ sq. in.; area of upper base, $23'' \times 32'' = 736$ sq. in.; area of middle section (that is, a section halfway between the upper and lower bases) multiplied by 4, $16'' \times 25'' \times 4 = 1{,}600$ sq. in. Then, $162 + 736 + 1{,}600 = 2{,}498$, and 2,498 multiplied by one-sixth the vertical height (i. e., $12 \div 6 = 2$), or $2{,}498 \times 2 = 4{,}996$ cu. in., the capacity of the pan.

---

PROBLEM 2.

**34. To develop patterns for a square pan whose ends have a flare different from that of its sides.**

EXPLANATION.—No perspective figure is given for this problem, since its conditions may be understood from the following description. Both the lower base of the pan and its height are the same as in the preceding problem. The upper base is to measure $16'' \times 32''$. The ends of the pan have the same flare as in the previous problem, but the sides will flare only $3\frac{1}{2}$ inches. The widths of the lateral surfaces, therefore, will be unequal, and it will be seen, also, as the construction proceeds, that it is important to understand which way the corners are to be folded. Two constructions are given—in one, the corners are folded toward the ends; in the other, they are folded back in the direction of the sides of the pan. As before, the drawings are to be made to a scale of 3 inches to 1 foot.

CONSTRUCTION.—The dimensions for the front elevation are the same in this case as in Problem 1, and the view shown at *A B D C*, Fig. 16, is accordingly reproduced as indicated. Next, the stretchout *M N* is drawn perpendicular to *A C* and of indefinite length, since the spaces thereon cannot be laid off until the side elevation has been drawn. Accordingly, a point *o* may be conveniently taken some distance below the front elevation, and the line *M' N'* drawn

Digitized by Google

perpendicular to $M N$. The line $M' N'$ may be produced toward the right, as shown in Fig. 16, and used as a center line for the construction of the side elevation $E F H G$. After this view has been drawn in accordance with the dimensions given in the specifications, the stretchouts may be completed as shown in Fig. 16. The completion of the development of the lateral surfaces is then made as before;

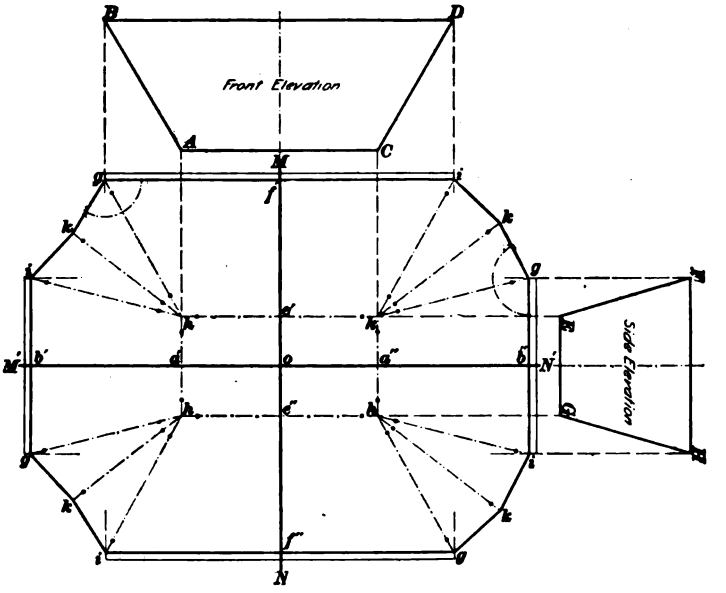


FIG. 16.

since the operation is shown in Fig. 16, no description is necessary.

From an inspection of Fig. 16, the student will see that a different process for determining the outlines of the corners is used on each side of the line $M N$. The corners on the left of that line are so made as to be turned back on the sides, while those shown on the right of $M N$ are intended to be turned back on the ends. The outline of the cut on the left is seen to be concave, while that on the right is

Digitized by Google

convex. The method of finding these outlines is very similar to that used in the preceding problem and therefore needs no extended explanation, although it should be noted that the arcs described from the points *g* are in each case measured on the edges toward which the turn is to be made. Note also that the lines *h k* in each case bisect the angles *g h i*. Of course, the student will understand that all the corners of a pan should be turned in the same way—either toward the sides or toward the ends, as preferred—not, as might be construed from Fig. 16, part one way and part another. They have been so shown in the illustration only for the sake of enabling both methods to be understood.

---

PROBLEM 3.

**35. To develop patterns for a funnel.**

SPECIFICATION.—The funnel shown in Fig. 17 is so simple in form that merely to mention its dimensions will suffice for the draftsman. It is to be made of No. 26 galvanized iron and is to measure 20 inches across the top; the body is to be 15 inches high and the lower opening in the body 3 inches in diameter; the spout is to be 6 inches long, with a 2-inch outlet. The body is to be lock-seamed, the spout merely lapped and soldered, and a ¼-inch rod is to be wired in the upper edge of the body.

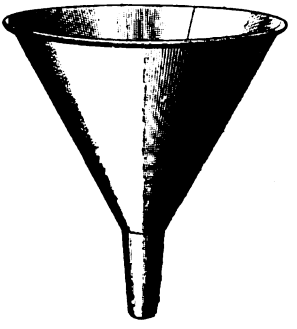

FIG. 17.

CONSTRUCTION.—From the foregoing description of the dimensions, the elevation shown in Fig. 18 may be readily drawn and the development of body and spout at once made in accordance with the principles of radial development It will be seen from Fig. 18 that all the operations required may be performed if only one-half of the elevation be drawn;

Digitized by Google

that is, only such an amount of the elevation is required as is shown on one side or the other of the vertical center line. In actual practice, therefore, the student will frequently avoid some extra work if but one side of such symmetrical figures

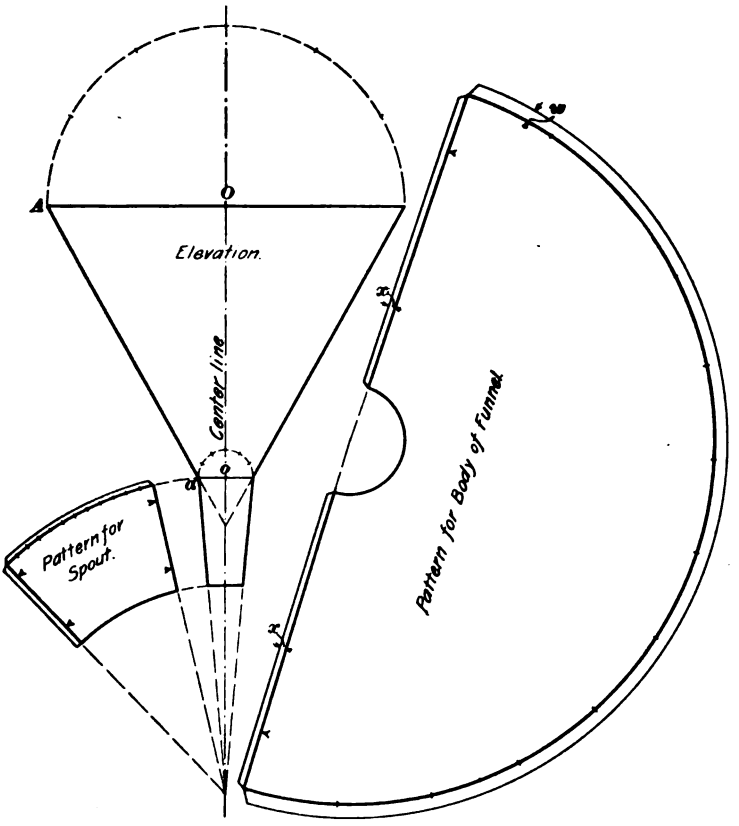


FIG. 18.

is represented. Instead of drawing a complete plan of this solid, semicircles may be described, as shown in Fig. 18, from *O* and *o* as centers, and the stretchout for the patterns measured on the respective arcs. This short method is usually adopted in the case of simple drawings, and it may

Digitized by Google

be stated that where accuracy is not an item for consideration, the stretchouts may be stepped off as equivalent to six times the distances *O A* and *o a*, respectively. In circles of large diameter, however, this distance (which is really the chord of one-sixth of the circumference) varies too much from the actual distance around the outline of the circle, and should not be used—in fact, it is better in every instance to describe the semicircle and properly subdivide it in accordance with previous instructions.

As in Problem 1, the amount to be added for the wiring edge may be computed and added, as shown by the space *w* in Fig. 18. As has been previously mentioned, the amount to be added to the sides of the pattern for the lock seam must be equal to three times the width of the lock. For an article of this size, a lock of $\frac{1}{4}$ inch would be suitable, and $\frac{3}{4}$ inch is therefore to be added to the pattern, or half as much to each edge; that is, the width of each of the spaces *x*, *x* is $\frac{3}{8}$ inch. The upper edge of the pattern for the spout should be widened by a lap for soldering; also the side for the same reason. These additions should be indicated by light lines, as in Fig. 18, and the patterns notched in the manner shown.

The student will observe that the stretchout arc is not here described from the vertex of the cone, as was conveniently done in *Development of Surfaces*, but the pattern for the body of this funnel is laid off to one side of the projection drawing. The location of the development as related to the other portions of the drawing is thus shown to be a matter of convenience in the case of simple cone developments.

Capacity.—When the capacity of funnels is given in manufacturers' price lists, the figures usually relate to the large cone only, and do not include the spout. The exact method, of course, would be to treat the two solids as frustums of cones; since the application of the rules for these solids may be better shown in a later problem, it is omitted here. The mechanic is usually given the dimension figures, no attention being paid to the capacity of the article.

Digitized by Google

PROBLEM 4.

**36. To develop the patterns for a flaring measure.**

EXPLANATION.—There are perhaps few articles made by the sheet-metal worker that require greater accuracy in the dimensions or in the development of patterns than the fluid measures. Before such measures are available for use to the purchaser, they must be sealed by a town or city official, and on this account, unusual care must be observed by the workman. The usual form for these measures is illustrated in Fig. 19, and while there is an endless variety of proportions used by different makers and for different purposes, the proportion shown in the illustration has been recommended by the United States Government, and the draftsman should conform to this standard whenever possible. The diameter of the bottom is taken as two-thirds of the vertical height, and the diameter of the upper base is two-thirds that of the lower. On the basis of these proportions, the following schedule has been computed by the government authorities:

FIG. 19.

TABLE XVI.

DIMENSIONS FOR LIQUID MEASURES.

| Size. | Height. Inches. | Diameter of Lower Base. Inches. | Diameter of Upper Base. Inches. |
|---|---|---|---|
| 1 gallon..... | 9.80 | 6.53 | 4.35 |
| ½ gallon..... | 7.78 | 5.18 | 3.45 |
| 1 quart..... | 6.17 | 4.11 | 2.74 |
| 1 pint..... | 4.90 | 3.27 | 2.18 |
| ½ pint..... | 3.89 | 2.59 | 1.73 |
| 1 gill..... | 3.09 | 2.06 | 1.37 |

Digitized by Google

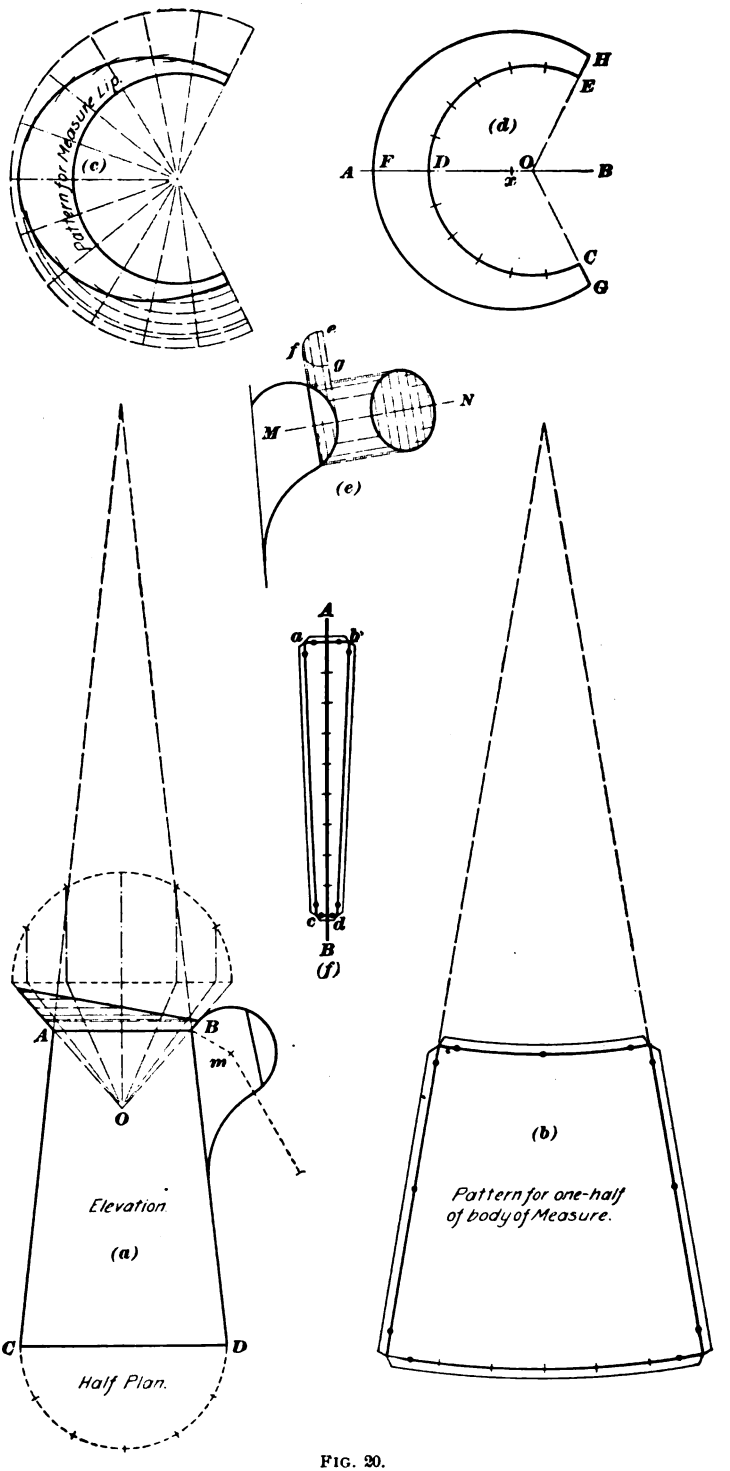


FIG. 20.

Digitized by Google

SPECIFICATION.—The developments for this problem are those of a 1-gallon measure, and the drawings are to be made to a scale of 3 inches to 1 foot, using the dimensions given in the foregoing table. The material used is IX bright tin plate. As is usual with articles of this description, a lock $\frac{1}{8}$ inch in width is used for the side seam, a No. 12 wire is enclosed in the upper edge, and a margin for the double seam is added to the lower edge of the body. A handle, indicated in the illustration, is to be attached to the side of the measure. Complete instructions for the entire article are included in the following construction.

CONSTRUCTION.—In accordance with the specified dimensions, draw first the elevation and the half plan, as shown in Fig. 20 (*a*). Next lay out the pattern for the body of the measure as at (*b*) and for the lip as at (*c*), in accordance with the usual method. This method has been explained in preceding cases, so that no further demonstration need be given. The allowances for the various edges are as in preceding problems. The student will notice that the outline of the pattern for the lip of this measure very closely resembles that of two eccentric circles. This resemblance is taken advantage of by many draftsmen, and approximate patterns are occasionally laid off for this part of the measure —and for similar parts of other pieces of tinware—by a somewhat shorter "rule of thumb." This practice is admissible, however, only when the draftsman is pressed for time, and where but few pieces are required. It is usually better to lay out the pattern in a proper manner, as is shown at (*c*).

An approximate pattern may be produced by the short method just mentioned, as follows: Draw any line, as *A B*, Fig. 20 (*a*), and on it fix a convenient point *O*. Set the compasses to a radius equal to three-quarters of the diameter of the upper base of the measure and describe the arc *C D E*; on this arc space off a distance equal to the circumference of the upper base and similar to that of the regular development shown at (*c*). Next, set off the width at the front of the lip, as *D F*, and make *F x* equal to the diameter of the

Digitized by Google

upper base, that is, $A\,B$, Fig. 20 ($a$); from $x$ as a center and with $x\,F$ as a radius, describe the arc $G\,F\,H$; draw $G\,O$ and $H\,O$ through $C$ and $E$, thus completing the approximate pattern for the lip.

Several modifications of this method are in common use, but the one just described is perhaps the most reliable and convenient.

The patterns for the handle are shown in Fig. 20 ($e$) and ($f$). Since the matter of the design is of importance to the student, the method of obtaining the curve shown in the projection drawing of Fig. 20 will be explained. From the point $B$, Fig. 20 ($a$), and at an angle of 60° to the center line of the drawing, draw a line of indefinite length toward the lower right-hand corner. On this line, mark the point $m$ at a distance from $B$ equal to one-third the diameter of the upper base. With $m$ as center and a radius equal to $m\,B$, describe an arc as shown. This arc forms the upper portion of the curve for the handle. The remainder of the outline may be completed by describing an arc tangent to the one just drawn and to the side of the measure, using as a radius therefor a distance equal to two-thirds of the top diameter of the measure. The curve thus defined may be spaced and the stretchout for the handle laid off on the line $A\,B$, as shown in Fig. 20 ($f$). At ($f$) draw lines perpendicular to $A\,B$ through the upper and lower points thus determined, and make $a\,b$ equal in length to the desired width of the upper end of the handle; make $c\,d$ equal to the width at the lower end. Laps should be added at the ends of this pattern for soldering or riveting, and also along the sides, in order that the material may be folded so as to stiffen the handle and render it more serviceable. Greater strength is sometimes obtained by wiring these side edges. When the edge is folded for the purpose of adding strength or to avoid the "raw" edge of the metal, as at the side edges of this handle, such edge is called a "hem." This term, however, is applied only when the lighter gauges of sheet metal are used.

The drawings shown in Fig. 20 ($e$) illustrate the method

Digitized by Google

of laying out the pattern for the "boss" for the inner side of the handle. This piece is added in order that the handle may be more readily grasped and firmly held in the hand. Since the pattern is obtained by the method of parallel developments, no explanation is necessary. The curved outline $efg$ is a section through the central portion of the handle—that is, on the line $MN$—and may be drawn in any arbitrary manner so long as the distance $eg$ is not greater than the width of the handle at the point where the line $MN$ crosses it.

Where the mechanic is called on to make but few measures at a time, it is not usual to pay much attention to these minor details, although it is customary to lay out and preserve such patterns in order to avoid unnecessary work. It is therefore essential that every part of the work should be carefully done.

CAPACITY.—The rule given in *Arithmetic* for finding the volume of the frustum of the pyramid or cone applies to this solid; and since the dimensions stated in the specification are in decimal parts of an inch, and therefore somewhat complicated for purposes of illustration, a new set of figures consisting of whole numbers will be used in the exemplification of the rule.

Required, the capacity of a measure 12 inches in height, 8 inches in diameter at the lower base, and 6 inches in diameter at the upper base. The radii of the bases are 4 inches and 3 inches, respectively. Therefore the volume is $(4^2 + 3^2 + 3 \times 4) \times \frac{1}{3} \times 3.1416 \times 12$, or 464.96 cubic inches, or about 3 cubic inches more than 2 gallons.

These dimensions are, therefore, very nearly correct for a 2-gallon measure, and it may be stated that if the vertical height is taken as $11\frac{5}{8}$ inches in place of 12 inches, the measure will be only .53 cubic inch too large—an approximation near enough for all practical purposes of the mechanic.

The Mensuration given in *Arithmetic* is thus shown to be of practical value to the student. He should assume solids of various dimensions and work out the examples for purposes of gaining practice in this work.

Digitized by Google

PROBLEM 5.

**37. To develop patterns for a foot-bath.**

SPECIFICATION.—The common form of this article is shown in Fig. 21. As may be understood from the illustration, the bases are elliptical, while the sides flare uniformly. The short and long diameters of the lower base are 10 and 20 inches, respectively. The sides flare 4 inches all around; that is, the upper base is an ellipse whose minor and major axes are 18 and 28 inches, respectively. The vertical height is 11 inches. The bath is to be made of No. 26 galvanized iron and a No. 4 wire enclosed in its upper edge. The body

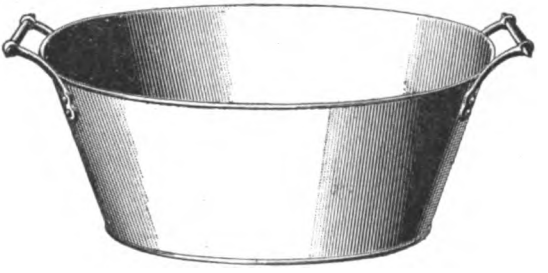

FIG. 21.

is to be seamed in two pieces and the bottom attached by a double seam in the usual way. These drawings may be conveniently made to a scale of 3 inches to 1 foot. It will be seen that this problem is a practical application of the principles shown in *Development of Surfaces*, where the surfaces of an oval pan body are portions of the surfaces of different cones. Since problems like this occur in nearly all the sheet-metal working trades, the construction should be thoroughly mastered by the student.

CONSTRUCTION. — The plan should be drawn first. In doing this, the ellipses may be described by circular arcs, as shown in *Geometrical Drawing*, which is an approximate method of constructing ellipses that is suitable for nearly all the smaller articles of this shape made by the mechanic. The centers $b$, $b'$ and $d$, $d'$ are thus located and the outline of both bases described as indicated in Fig. 22. Next, draw

Digitized by Google

the front and the side elevations, setting off the vertical height as called for in the specification. The next step is to define the height of the cones, portions of whose frustums

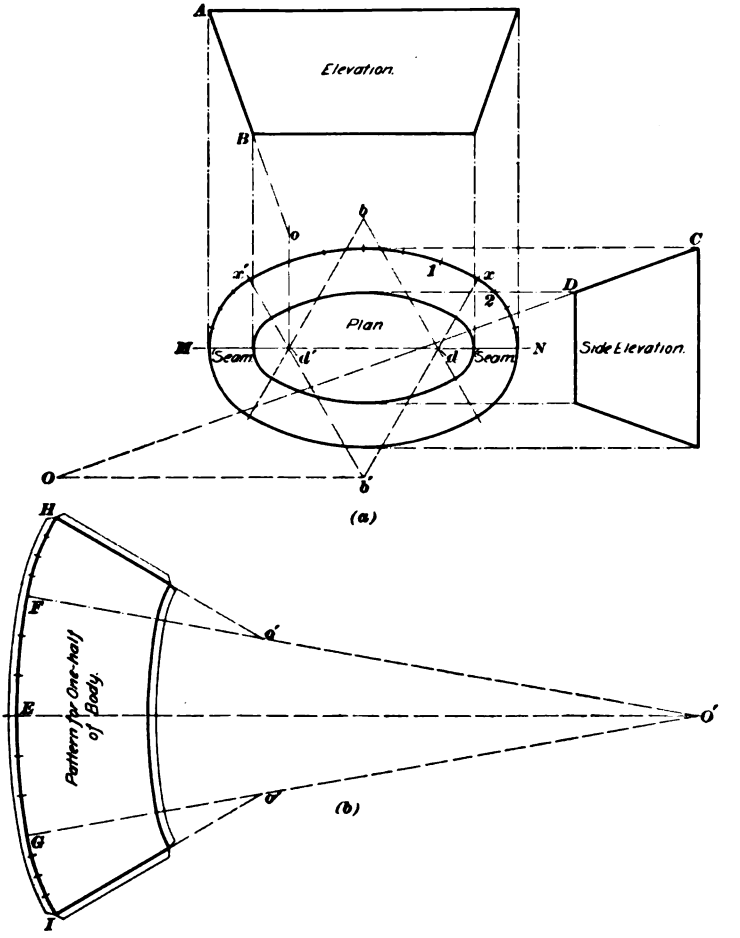


FIG. 22.

are to form the sides of the finished foot-bath. At $d'$ erect a perpendicular to the major axis and extend the side $A\ B$ (of the front elevation) until it intersects the perpendicular from $d'$ in the point $o$. Locate the point $O$—the vertex of

Digitized by Google

the larger cone—in a similar manner, from the center $b'$ and an extension of the side $C\ D$ of the side elevation. Next, by the line $M\ N$, divide the base into symmetrical halves, and extend the line $b'\ d$ until it meets at $x$ the outline of the upper base in the plan. Divide that portion of the outline between $N$ and $x$ into a convenient number of equal spaces, in this case four; also divide the portion between $x$ and $x'$, six spaces being a convenient number. The projection drawing is now ready for development. In a convenient portion of the drawing, as at ($b$), lay off the line $O'\ E$ of indefinite length; with a radius $O\ C$ describe an arc, also of indefinite length, from a center at $O'$; and from the same center, with a radius $O\ D$, describe a concentric arc in the manner shown. Set the dividers to the distance $x\ 1$ and step off three spaces on each side of the point $E$. Draw $F\ O'$ and $G\ O'$. Next, set the compasses to the length of an element of the smaller cone—that is, to the distance $A\ o$ at ($a$)—and from $F$ and $G$ as centers locate the points $o'$ at ($b$); with the same radius, describe from these centers the arcs $F\ H$ and $G\ I$. With a radius $o\ B$ describe from the same centers concentric arcs in the manner shown, and draw $H\ o'$ and $I\ o'$, thus completing the pattern with the exception of the allowances for locks, seams, and wiring edge. Since these allowances differ in no way from those of preceding problems, they need no further explanation. The figure thus produced is one-half of the entire pattern, hence two such pieces will form the required pattern. No attention is paid to the pattern for the bottom of the bath, for it is necessary merely to add, to an outline similar to that shown for the lower base in the plan, the margin required for the double seam.

It may sometimes be desirable to have the finished article assume more nearly the outline of an ellipse; hence, a closer approximation is shown in Fig. 23 ($a$) and ($b$). The ellipses in this figure are drawn by the method of finding centers to construct an approximate figure by arcs that was given in *Geometrical Drawing*. Since the various lengths for the radii of the stretchout arcs are found from the plan and a

Digitized by Google

single elevation, the method of accomplishing this result will need some explanation. One side of the elevation is

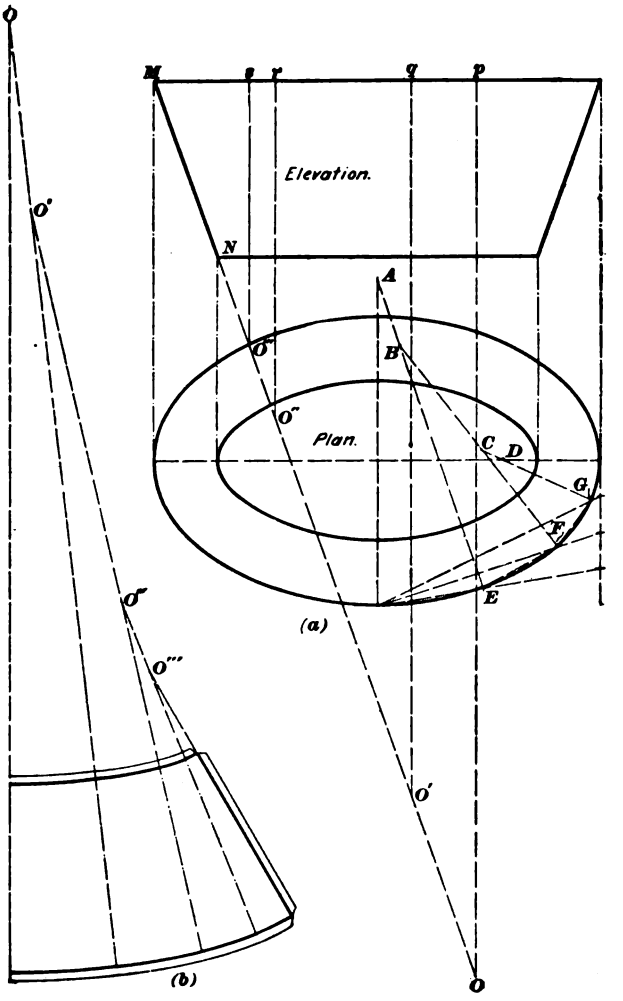


FIG. 23.

first produced in an indefinite line, as $M N$ to $O$; next, the various radii used in the construction of the plan are set off along the line of the upper base, that is, $M p$ is made equal



Digitized by Google

to *A E*, *M q* to *B F*, *M r* to *C G*, and *M s* to *D G*. From these points (*p*, *q*, *r*, and *s*), perpendiculars to the base line are erected and produced until they intersect the line *M O* at *O'*, *O''*, etc. The drawing at (*b*) is then constructed in precisely the same way as the development in Fig. 22. By increasing the number of centers, the ellipse may be very closely approximated, but for most uses of the mechanic, the method shown in the regular demonstration of the problem will be sufficient. In cases where an exact ellipse is required, the pattern must be developed by triangulation.

CAPACITY.—The method of finding the volume of this solid affords another illustration of the practical application of the prismoidal formula. By assuming that the bases are true ellipses, the volume may be very closely approximated.

The area of the lower base may first be found (*Arithmetic*, Part 9) thus:

$10 \times 20 \times .7854$ ($= \frac{1}{4}$ of 3.1416) $=$ 157.08. To this is added the area of the upper base, or

$18 \times 28 \times .7854 =$ 395.84, and four times the area of the mid-section, or

$14 \times 24 \times .7854 \times 4 =$ 1,055.58

1,608.50.

$1{,}608.50 \times 11 = 17{,}693.5$; $17{,}693.5 \div 6 = 2{,}948.9$ cubic inches, or a trifle more than $12\frac{3}{4}$ gallons. It will be seen from the foregoing example that the mid-section is found by adding the dimensions of the upper and lower bases and dividing the result by 2; thus, $10 + 18 = 28$; $28 \div 2 = 14$, the minor axis of the middle section. By a similar process, the major axis is found to be 24.

---

PROBLEM 6.

**38. To develop the pattern for the body of a sitz bath.**

EXPLANATION.—Bathtubs of this description are made in a variety of forms, nearly every manufacturer having a

Digitized by Google

design with some slight distinguishing difference; all these articles, however, are usually frustums of the cone, the outline of the upper edge being a matter of design that is optional with the draftsman. One method of obtaining this curve occurs among the projection drawings for this problem, but it need not be followed in actual work should the curve thus produced not please the fancy of the workman. The sitz bath shown in Fig. 24 is constructed of No. 9 gauge zinc and is what is known as a 27-inch tub, that is, it is to measure 27 inches across the lower edge of the upper base. The total height of body is to be 33 inches, with a graceful curve defining the upper base. The drawings may be conveniently made to a scale of 1 inch to 1 foot.

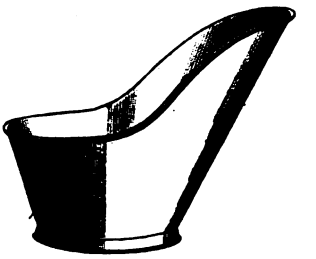

FIG. 24.

CONSTRUCTION.—Draw first a center line of indefinite length, as $OB$, Fig. 25, and on this line set off the height of 33 inches at $CD$; bisect $CD$ at $E$ and draw perpendiculars through $C$, $D$, and $E$ in the manner shown. Make $EF$ and $EG$ each 13½ inches, and make $CO$ equal to $CE$. Complete the cone, as indicated by the dotted lines, and draw the half-full view of the base $HBL$. The next step is to indicate the elements of the cone on the elevation; this is done in the regular way, by first spacing the outline of the base and afterwards projecting the points to the base line $HL$, after which the elements are drawn, as shown in Fig. 25. Fix the point $M$ at the intersection of $EF$ with the element shown, and draw $ML$; bisect $ML$ at $x$, and with a radius equal to $Mx$, describe the arcs that define the upper base from centers located at $e$ and $e'$. The completion of the projection drawing is thus indicated, and since the development is clearly represented in Fig. 25 and is similar to those already explained, no further instructions are necessary. No attempt has been made to provide for any edges or allowances in this pattern, although as a

Digitized by Google

matter of course they should be allowed for by the mechanic. The subject of design is an important one in connection with sheet-metal patterns, and the student will do

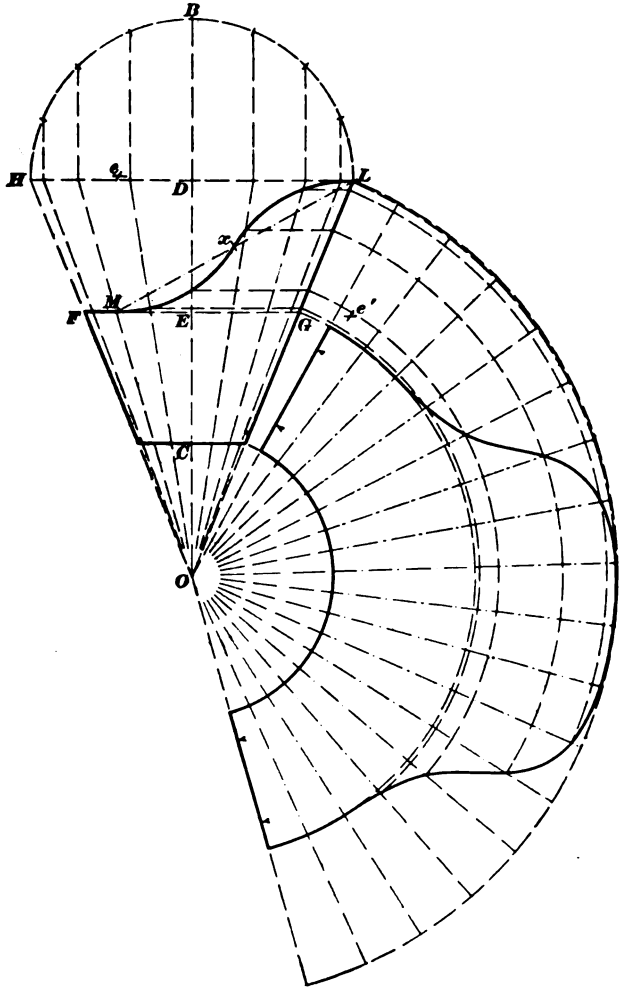


FIG. 25.

well to note the various processes as they are explained in the different problems, for principles thus learned may often be applied to other cases. It will be seen in this

Digitized by Google

instance that, after the development of the cone has been mastered, its application to the irregular solid represented by the projection drawing is comparatively easy—the principal feature here being the design of the outline.

The capacity of this vessel is, of course, calculated in the same way as is the frustum of the cone, it being necessary to compute the contents only for that portion below the line $FG$.

NOTE.—The student will observe that in this case it is convenient to draw the plan and elevation of the cone in a relation apparently opposite to that described in *Practical Projection*. This is because the article is shown to better advantage in an upright position. The same relation is maintained between the different views, however, and the change is made merely to suit the requirements of the drawing.

---

PROBLEM 7.

**39. To develop the patterns for the lining of a wood-cased bathtub.**

SPECIFICATION.—The dimensions of this tub are "over all" as follows: 4 feet 6 inches long, 2 feet wide, and 1 foot

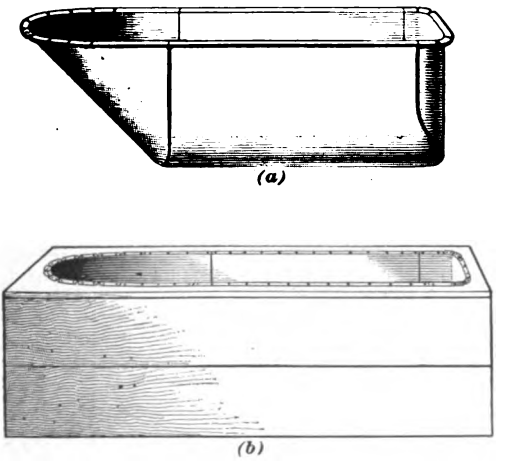


FIG. 26.

6 inches deep; 14-ounce copper is to be used, and all joints are to be double-seamed; the metal is to be flanged out at

Digitized by Google

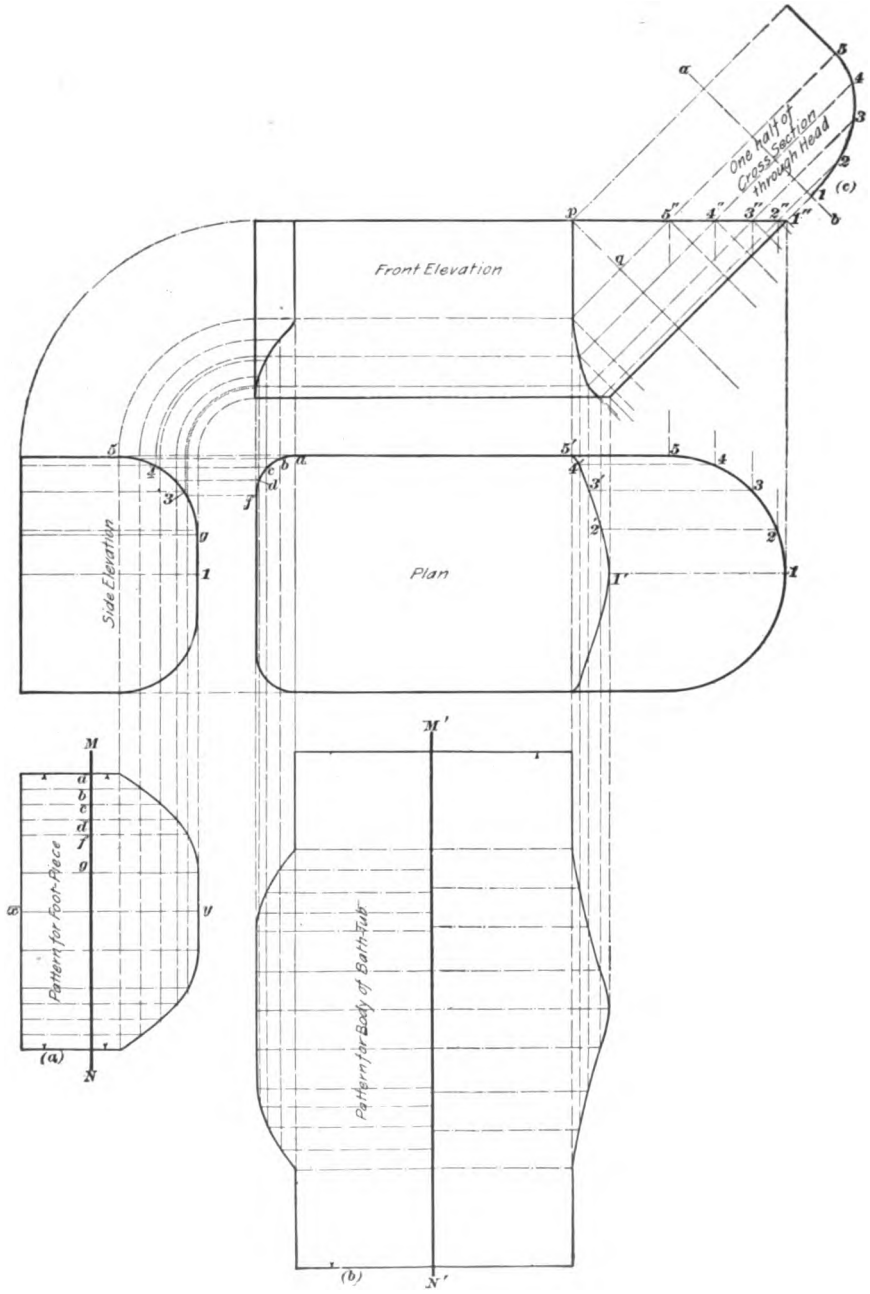


FIG. 27.

Digitized by Google

the top ¾ inch in order to provide a margin for nailing to the wood casing. This is the most common form of the trade article and is shown in Fig. 26. When supplied to the trade, these bathtubs are usually encased in wooden jackets, as at (*b*), Fig. 26. The drawing at (*a*) shows the metal lining by itself, as if lifted out of the case—the lining only being considered by the student in this problem. The illustration represents the front corners of the tub slightly rounded, as they are, to a radius of 4 inches, while the bottom longitudinal edges are rounded to a radius of 8 inches. The back edge of the top, as viewed from above, has the outline of a semicircle.

CONSTRUCTION.—From these data the projection drawings may be easily constructed, although, as seen from Fig. 27, a plan, a front, and a side elevation are necessary in order to show the various dimensions properly. Draw the plan first to a scale of 1½ inches to 1 foot; next, the side elevation; and, finally, the front view, giving the inclined head piece an angle of 45° and omitting all lines of intersection until the outlines are in place. The line of intersection at the foot of the tub need not be represented in the front elevation, but since the delineation of this line will afford some desirable practice for the student, it may be drawn as shown in Fig. 27. First, locate points *a* and *f* at the ends of the curve in the plan, and then, by dividing the arc into a convenient number of equal spaces, locate other points *b*, *c*, and *d*. Project these points to the outline in the side elevation, and then determine the points in the front view by means of primary and secondary projectors drawn, respectively, from the plan and the side elevation. Trace the line of intersection through the points thus determined in the front elevation.

The pattern for the foot piece of the tub may now be developed. Draw the stretchout *M N* and set off the width of the spaces shown at *a*, *b*, *c*, etc. in the plan. It is necessary to note an interedge at *g*—the terminal point for the curve of the sides of the tub—and to produce a corresponding line in the development at (*a*). The points located on

Digitized by Google

the stretchout are of course the same on both sides of the center line *x y*, and the completion of the pattern is made by the regular process for parallel developments, as shown in the drawing at (*a*), Fig. 27.

Until the line of intersection between the body and the head piece has been correctly determined, the pattern for the head piece and for the main body of the bath cannot be produced. This involves some work in projection and is accomplished as follows: Space the outline of the semicircle (one-half will be sufficient) at *1*, *2*, *3*, *4*, and *5*, and draw lines *1–1'*, *2–2'*, etc. in the plan, producing them indefinitely toward the left; project the points *1*, *2*, *3*, etc. to the elevation at *1''*, *2''*, 3'', etc., and thence draw, across the front elevation, lines of indefinite length parallel to the inclined outline of the head piece. These lines are now to be intersected by secondary projectors drawn from corresponding points in the side elevation; therefore, project the points *1*, *2*, *3*, etc. in the plan to the side elevation by means of primary projectors, and from the intersections in the side elevation at points *1* to *5*, inclusive, draw secondary projectors in the usual manner. Through the points where these secondary projectors intersect the parallels drawn from *1''*, *2''*, *3''*, etc. in the front elevation is to be traced the required line of intersection. The pattern for the body may now be developed, the usual method for parallel solids being applied as in the case of the foot piece. Since the process is completely shown in Fig. 27, no explanation is necessary.

Before the pattern for the head piece can be laid out, it is required to produce a section that will be at right angles to the parallel lines of the solid—that is, an edge view of the curved surface composing it—since from no other view can the correct distances for the stretchout be obtained. This view is found as follows: In a convenient portion of the drawing, as at (*c*), draw a line *a b* perpendicular to the parallel lines just mentioned, and across this line, for an indefinite distance beyond, produce the parallel lines from the points *1''*, *2''*, *3''*, etc. in the manner shown in Fig. 27 (*c*).

Digitized by Google

Next, take in the dividers the vertical distances of the points *1*, *2*, *3*, etc., from the line *1–1'* in the plan, and set them off on their respective parallels in regular order from the line *a b* at (*c*). The curve traced through the points *1*, *2*, *3*, *4*,

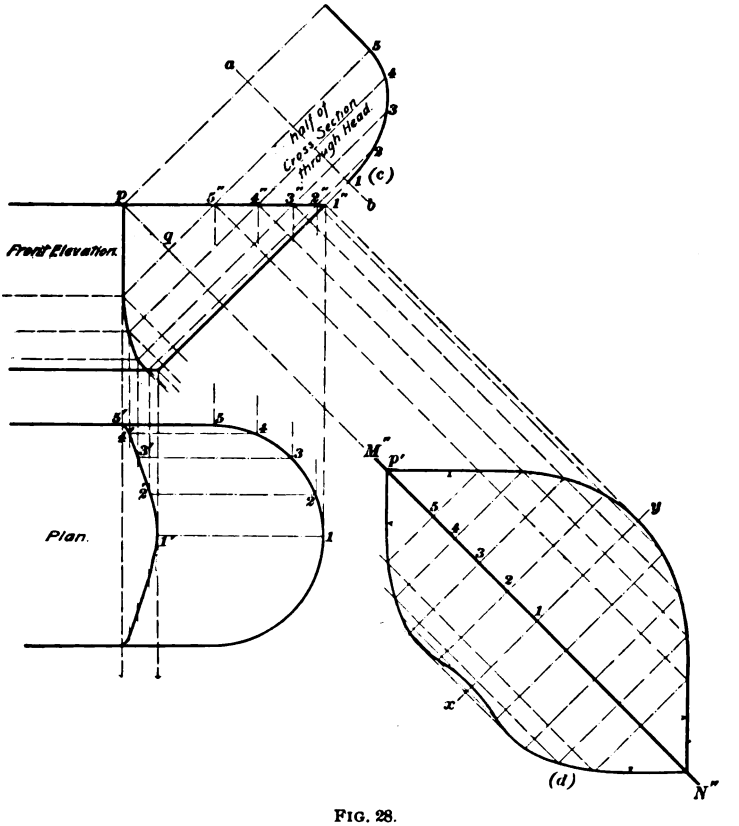


FIG. 28.

and *5*, thus located at (*c*), will be the true outline of a section taken at right angles to the parallel lines of the head piece. In order to illustrate the remaining portion of the work to better advantage, a part of the plan and elevation of Fig. 27, together with the half view of cross-section through head, is reproduced in Fig. 28. From this illustration it will be seen that the stretchout for the pattern of the

Digitized by Google

head piece is developed on the line $M'' N''$ in Fig. 28 (*a*). Draw $x y$ in (*d*) at right angles to $M'' N''$, and from each side of this line set off on $M'' N''$ the spaces *1–2*, *2–3*, *3–4*, etc. equal to similarly numbered spaces in the full view of the section at (*c*), until the point *5* is reached, when the space $5 p'$ is made equal to the space $q p$ in the front elevation. The completion of the pattern is then made in the regular way for parallel developments, as in the case of the other patterns for the bathtub. Allowances for locks should be made to provide for the work called for in the specification.

The method of calculating the capacity of a solid of this shape is too complicated to be readily explained, and since the mechanic is seldom called on to give any capacity figures, no detailed explanation will be given. It may be briefly stated, however, that the general plan to be followed is to separate the complicated solid into its component parts and then to apply the rule best adapted for the separate sections. It will be seen that the portion called the head piece resembles an ungula, and that the remainder of the solid may be separated into various prisms, whose irregular bases may be recognized as parallelograms and sectors, respectively. By finding the contents of each solid thus separated and adding the products, the total capacity may be closely approximated, although, as previously stated, the mechanic will seldom be required to produce articles of this sort with other than specified measurements.

---

PROBLEM 8.

### 40. To develop patterns for a steel-clad bathtub.

SPECIFICATION.—An illustration of this bathtub is given in Fig. 29; the dimensions and proportions are the same as those of a tub made by a well-known manufacturer. It is generally understood that this article consists of a tin-coated copper lining protected externally by a sheet-steel jacket; special castings at each end, in which the seams rest, serve as strengthening braces, while the lower ends of the

Digitized by Google

castings are formed into suitable legs and support the tub in a neat and ornamental manner. The castings are, of course, outside the province of the sheet-metal worker, and will receive no attention in this description. The patterns for the jacket are produced in a manner precisely similar to that shown for the lining, but are made sufficiently large to admit of the lining being dropped in place; a molded wooden rail

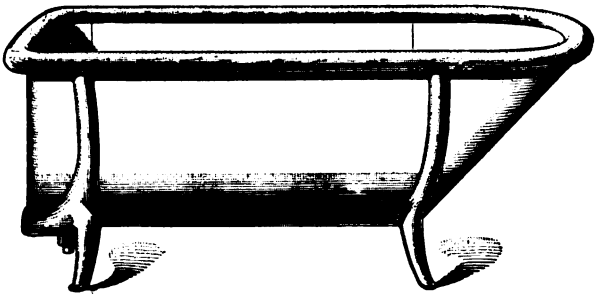

FIG. 29.

at the top, to which both copper and steel are attached, forms a finish and adds to the appearance and utility of the tub. The dimensions are the same as in the preceding problem, but certain peculiarities in the design are observed and will be explained in the construction. To these the student's attention should be closely given, since the processes shown may be applied to a variety of forms.

CONSTRUCTION.—Draw the plan first, making the total length 4 feet 6 inches and the radius at the head 12 inches, as shown in Fig. 30; the corners at the foot are rounded to a radius of 4½ inches. This completes the outline of the upper base in the plan, and the front elevation may next be drawn, giving the outline at the head of the tub an inclination of 45°, as in the tub of the preceding problem; draw the outlines only, leaving the lines of intersection to be defined later. Two end elevations are drawn, the outline of each being the same; the lower portion of this outline is a semicircle of 12 inches radius. The four views are now complete, with the exception of the lines of intersection,

Digitized by Google

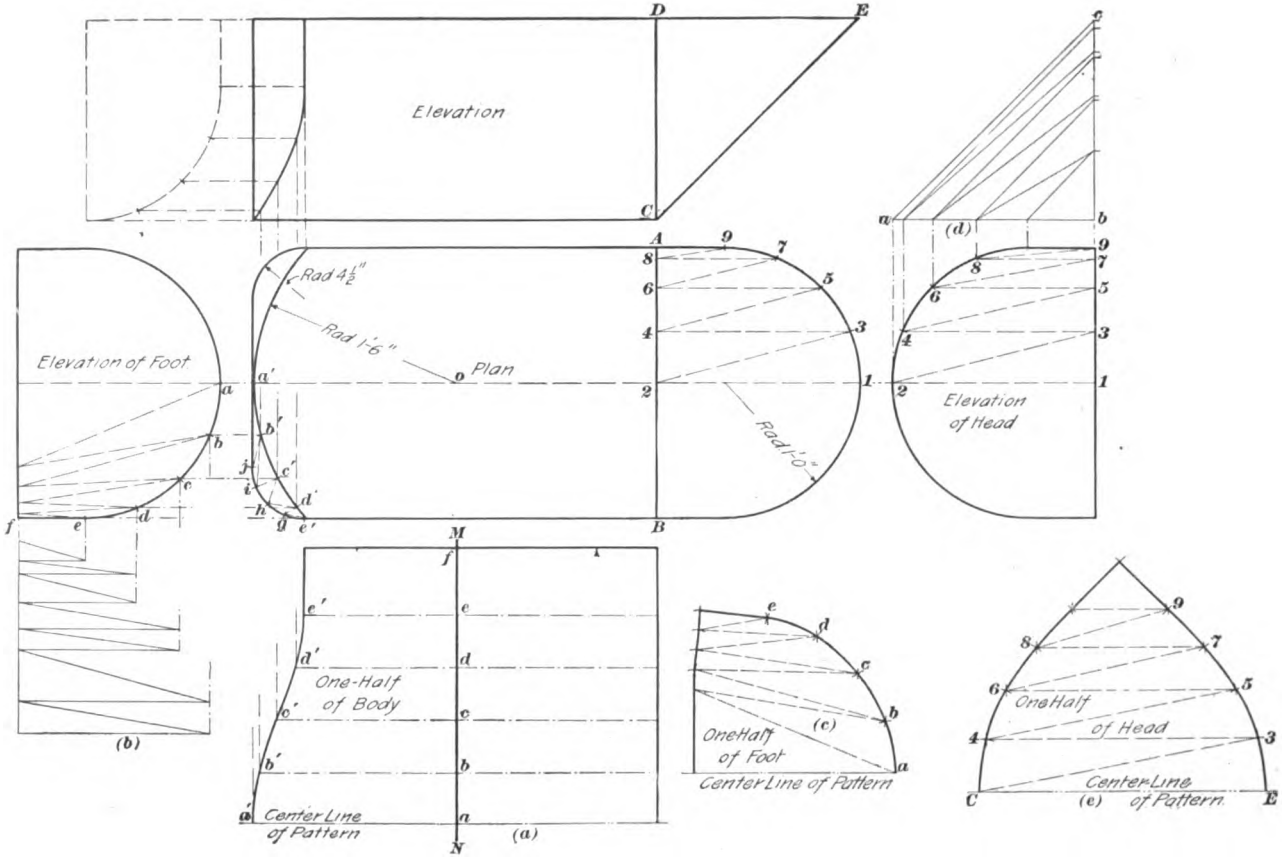


FIG. 90.

Digitized by Google

and, contrary to all usage that has thus far been shown in this Course, these lines are drawn arbitrarily in the following manner: The line of intersection at the head of the tub is to be represented by a straight line in both plan and front elevation, that is, $A\,B$ in the plan and its corresponding projection at $C\,D$ in the front elevation. Next, represent the line of intersection at the foot of the tub as an arc described with a radius of 1 foot 6 inches from a center located at $o$ on the main center line of the plan. Project this line of intersection to the front elevation, the first step being to locate the points $a$, $b$, $c$, $d$, and $e$ on the outline of the end elevation of the foot, whence they are projected to the plan at $a'$, $b'$, $c'$, etc., and then to the front elevation by means of primary and secondary projectors in the usual manner.

It is not to be understood that lines of intersection can thus be drawn in an arbitrary manner at the pleasure of the draftsman as they have apparently been drawn in this case. An intimate knowledge of the properties of the solid in question is necessary, and great care is to be observed when such a process is followed, for the resulting surfaces must bear certain relations to the other parts of the solid. These relations are best understood by the student as he studies the projections and imagines the model necessary to realize the drawings. Applying these principles to the drawing of the bathtub, it is seen that the foot piece is formed by a warped surface whose upper edge is defined in the plan by the line $e'g\,h\,i\,j$, etc., and whose lower edge is represented by the arc described from the center $o$—the upper edge being shown in its true length, while the lower edge line is foreshortened. It is at once known that triangulation is the only method that can be used to produce the development of the foot piece, while for the body of the tub the method by parallel lines can be used as heretofore. This pattern may, accordingly, be at once laid out as shown in Fig. 30 ($a$), the spaces on the stretchout $M\,N$ being taken from the elevation of the foot, where the surface of the body is shown "on edge." If desired, the student may produce the entire

Digitized by Google

stretchout and develop the full pattern, although only one-half is shown in Fig. 30—this being sufficient to reveal the method.

In order to define triangles on the warped surface of the foot piece, lines are drawn between successive points in the plan and side elevation, as in Fig. 30. The true lengths of such lines are determined by means of the triangles shown at (*b*), and the development at (*c*) is then merely a matter of reproducing these triangles in regular order and in their full size. The true lengths for the upper edge of the pattern are taken from the plan, while the radii for the respective arcs of the lower edge must be taken from the outline of the pattern for the body; thus, the radius *a b* at (*c*) is taken from (*a*) as *a' b'*, *b c* at (*c*) is equal to *b' c'* at (*a*), etc. As before, only one-half of the pattern is shown in Fig. 30 (*c*).

The patterns for the tub are now complete with the exception of that for the head piece. This pattern may be produced by the method of parallel lines, since, in this case, that portion of the solid has not been so altered as to effect a change in this particular. It would be necessary, however, if the method by parallel lines were adopted, first to find the actual outline of a section at right angles to such lines, as in the preceding problem, and since this is more laborious for the draftsman, the method by triangulation is to be preferred. The method of spacing and locating the necessary points is shown in the plan and the elevation of the head, the lines required for the triangles being shown also in these views. The method used in the construction of the triangles at (*d*), while not essentially different from that used in former problems, deserves mention on account of the order that is observed in transferring the distances. Referring to the plan, it will be seen that a triangle is not needed for the line *1–2*, that being shown in its true length as *C E* in the front elevation. To find the true length of the remaining lines, the right angle *a b c* is drawn in the position shown at (*d*), and the lengths of the required lines in the plan are set off on the side *b c*; the points *2*, *4*, *6*, etc. in the end elevation of the head are then projected to the

Digitized by Google

side *a b* and each hypotenuse drawn as in the figure. Since the distances between the points on each base are shown in their true length in the plan and elevation, the development at (*e*) may be made at once. Draw the line *C E* at (*e*) and make it of the same length as the line of inclination in the front view; next, construct the triangles in their relative positions and in accordance with the regular rules for such developments. After the pattern for this piece is complete, the relation between the method by parallel lines and that by triangulation, when applied, as in this instance, to a surface capable of development by either method, may be readily seen. Note that the lines *C E*, *3–4*, *5–6*, *7–8*, etc. at (*e*) are exactly parallel to one another—proof that were the vertical distances between these lines first determined, as in laying off the stretchout for a parallel development, the lines drawn through such points would be identical with those that have been produced by the method shown in this problem. The student will obtain desirable practice by working out the development for the head piece by both methods and afterwards comparing the resulting figures; if accurately done, the resulting outlines will be exactly the same.

The remarks relating to the capacity of the bathtub of Problem 7 will apply also to the form shown in this problem.

---

PROBLEM 9.

**41. To develop the patterns for a helmet lip.**

EXPLANATION.—What is known to trade workers as a "helmet" lip is added to certain vessels for liquids, particularly such as are suited for pouring. Examples are strainers, milk pails, certain styles of delivery cans, and the familiar sprinkling pot. The last is shown in Fig. 31, the helmet lip being designated by the letter *x*. There are numerous forms and designs for such a lip, varying with the taste of the draftsman and the uses for which the vessel is intended, the most common form, perhaps, being that shown in Fig. 31 on a circular vessel.

Digitized by Google

The main body of the sprinkler shown in Fig. 31 is 10 inches in diameter, and the inclination of the central line of the lip may be conveniently taken at 30°; the lip as represented in the plan is to cover exactly one-half of the body. The drawings may be made to a scale of 3 inches to 1 foot.

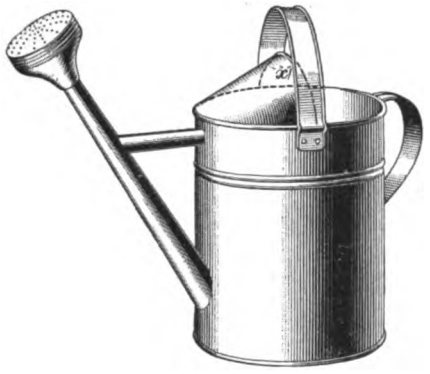

FIG. 31.

CONSTRUCTION.—Draw the projections in the plan and in the elevation as shown in Fig. 32, and divide the plan into symmetrical halves by means of the horizontal center line *a b*. Divide one-half of the outline in the plan into a convenient number of equal spaces, as at *c*, *d*, and *e*, and then construct a cross-section as it would appear if taken on the line *p M*—shown in Fig. 32 (*a*). The pattern is now ready for development by the parallel method, and the line *M N* is laid off for the stretchout, as shown at (*b*). Set off the spaces on this stretchout according to the widths determined at (*a*) and represented by corresponding numerals in (*a*) and (*b*), Fig. 32. Draw developers in the usual way and afterwards provide for suitable edges, as indicated in the drawing; thus, the edge *w* is added for the wire that is customarily placed in the upper edge of the lip, while the edge *y* is added to allow for the double seam, or lock, that is turned over the upper edge of the sprinkler to assist in fastening the lip in place.

**42. Special Cases.**—It often happens that it is not desirable to have the lip cover so much of the body as in the foregoing problem; thus, the lip for a strainer pail would be cut off on the line *p q*, Fig. 32. In such case, however, the pattern would be produced by a process similar to the one just explained, it being necessary to draw developers from

Digitized by Google

the intersections of the edge lines with the line $p\,q$, instead of with $p\,r$, as in this problem. The drawings now should be made in full, as already shown, since the full view of the cross-section can be determined in no other way,

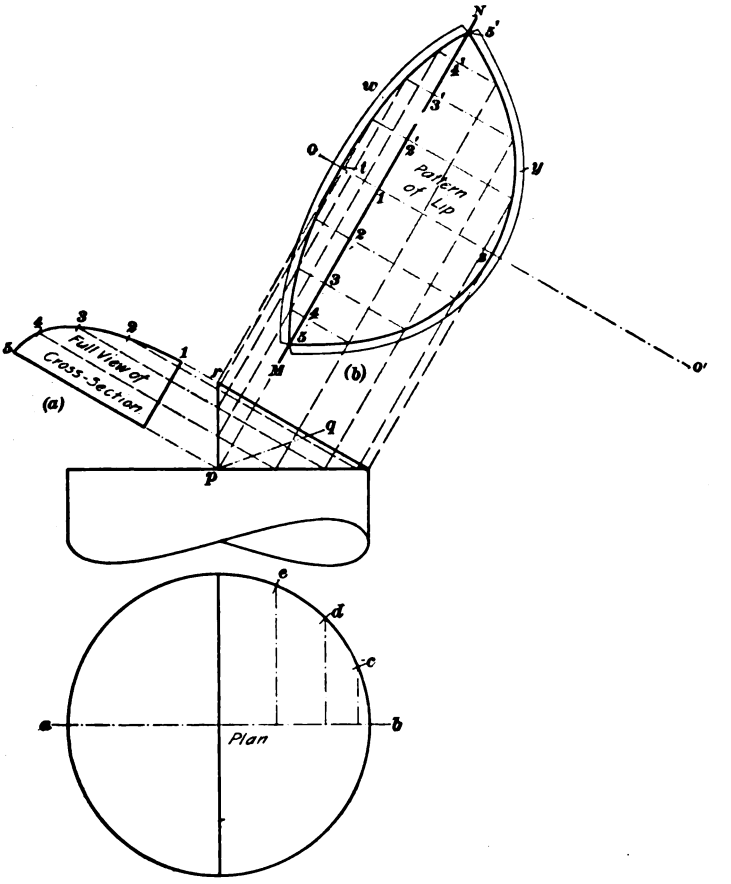


FIG. 32.

and without this view there will be no means of obtaining the width of the spaces for the stretchout.

It was shown in the case of the lip for the measure in Problem 4 that an outline very closely approximating that developed by the regular pattern process was produced by



Digitized by Google

a somewhat shorter "rule of thumb." Such a rule may be adapted to certain varieties of this problem. Thus, in Fig. 32, if the compasses are set to a radius equal to two-thirds of the diameter of the article, and an arc is described from a center *o*, intersected by an arc described with a radius one and one-third times the diameter, from a center *o'*, the resulting figure will very nearly approach that developed by the regular construction. After the first arc is described, the width of the lip is set off on the line drawn through the point *1*, as *s t*, the distance *t o'* then being equivalent to one and one-third times the diameter of the article. Such "jump" rules, as they are called, are the result of applying estimated radii, as in this case; they are to be depended on only for approximations or when accuracy is not essential. They are, however, of frequent service to the mechanic by enabling him to avail himself of economical or time-saving devices in special cases. They should not be applied in a general or promiscuous way, but the usual method of procedure shown in the construction of the problem should commonly be preferred.

---

PROBLEM 10.

**43. To develop the patterns for a conical spout intersecting a round can body at an oblique angle.**

SPECIFICATION.—The perspective view for this problem is shown in Fig. 31, but for the convenience of the student, the proportions shown therein may be slightly changed so that the drawing, made to a small scale, may show the details of construction to good advantage. The drawings in Fig. 33 are to be made to a scale of 6 inches to 1 foot. In place of the rose, or sprinkler head, shown on the end of the spout in Fig. 31, that end may be cut off horizontally, so as to resemble a teapot spout, as shown in Fig. 33.

CONSTRUCTION.—Draw the partial plan and elevation of the body of the can as in Fig. 33, and fix the point *O* for the vertex of the conical spout 5 inches to the left of the

Digitized by Google

outline of the body and 9 inches above the lower base. The point $A$ is $\frac{1}{4}$ inch from the base and $B$ is 5 inches from the same line. It is unnecessary to draw the entire projection in the plan, and this work may therefore be dispensed with. The line of intersection in the elevation must be accurately found in accordance with instruction already given, the process being substantially as follows:

Complete the full cone in the elevation, as shown by the dotted lines in Fig. 33, and draw the half-full view of the base; represent the elements of the cone and produce them to the vertex $O$. Next, project the point $O$ to the plan at $O'$, and represent in that view the sectional triangles as they would appear if the elements $b'O$, $c'O$, $d'O$, etc. in the elevation were considered cutting planes, as in the problem of *Practical Projection* that relates to the intersection of cones. The points $p$, $q$, $r$, and $s$, where the outline of the can intersects the sides of these triangles, are then projected to corresponding elements in the elevation, and, if desired, the line of intersection of the two solids may be traced in that view. It is not essential, however, that this line be actually drawn, since the points alone are to be used by the draftsman in obtaining the development—the patterncutter seldom needs to finish the projection drawing when made full size on his detail. The points thus determined in the elevation are now projected at right angles to the axis of the cone to the true edge line $O\,A$, as are also the points at the intersections of the elements with a horizontal line that may be drawn in the upper part of the figure to represent the upper base of the spout. The development of the pattern for the spout is then made in the regular way and needs no further explanation. Inasmuch as a lock should be provided for the seam lengthwise of the spout, an allowance for a $\frac{1}{8}$-inch lock may be made as shown in Fig. 33.

In order to obtain the pattern for the opening in the body of the sprinkler—which, of course, is found by the method for parallel solids—the stretchout $M\,N$ is laid off in the position shown, and the spaces $x\,p$, $p\,q$, $q\,r$, and $r\,s$, as found

Digitized by Google

in the plan, are spaced off on that line, as at (*b*). Through the points thus located, edge lines are drawn and developers

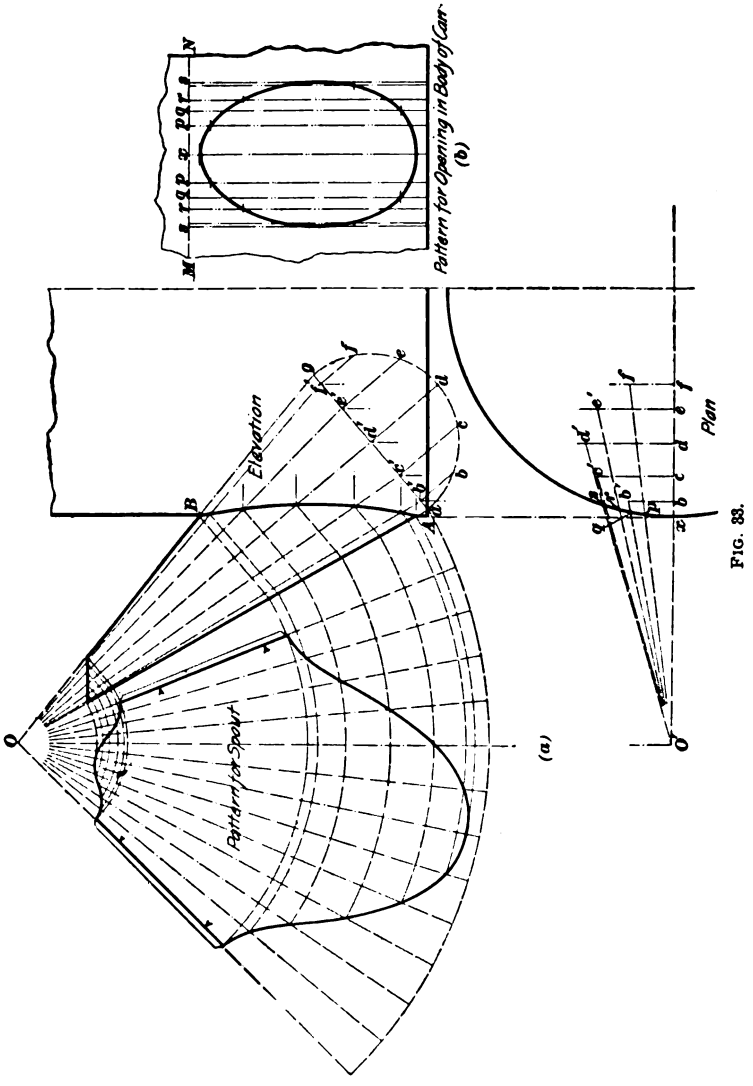


FIG. 88.

are then produced from the points determined for the line of intersection in the elevation. The outline at (*b*) is thus

Digitized by Google

developed, and here it may be stated that it is usual, in place of developing the pattern for the full body of a cylindrical can irregularly intersected, as in this case, to lay out only the pattern for the opening. The pattern for the body is then laid off from the table of circumferences, the height, of course, being given in a specification; such a pattern, being merely an outline in the form of a parallelogram, may be readily determined, although it may be desirable, after the dimensions of the figure have been ascertained, to make for future use a note of the sizes on the detail.

CAPACITY.—The method of finding the capacity of plain cylindrical vessels is so simple an operation that little need be said concerning it. The application of the rules contained in *Arithmetic* under the subject of Mensuration may be readily made, and if the student will acquire a degree of facility in the use of the table of Areas and Circumferences, he will find many cases wherein the knowledge thus gained may be used to practical advantage. For example, suppose that, in the present case, it is desired to know the height that a sprinkler whose diameter is 10 inches must be in order to hold 5 gallons. It is known that there are 231 cubic inches in a gallon; therefore, $231 \times 5 = 1{,}155 =$ number of cubic inches in 5 gallons. Looking in the table of Areas in *Arithmetic*, Part 9, it is found that a circle 10 inches in diameter contains 78.54 square inches. By reversing the rule for ascertaining the capacities of cylinders (*Arithmetic*, Part 10), the required height of the sprinkler may be found by dividing the cubical contents, or volume, by the area of the base, or $1{,}155 \div 78.54 = 14.706$, or about $14\frac{3}{4}$ inches. By reversing the operation, the diameter may be as readily found for vessels of a given capacity and height.

---

PROBLEM 11.

**44. To develop the patterns for a coffee-pot lip.**

EXPLANATION.—The sheet-metal worker needs no introduction to this familiar form, shown in perspective in Fig. 34.

Digitized by Google

Notwithstanding its frequent occurrence, however, it may be stated that the processes by which its surface development may be produced are to be reckoned among the most intricate that the draftsman has to perform. This intricacy is owing more to the number of operations than to their difficulty. Moreover, this problem affords an example of a case where the draftsman apparently reverses the usual order of certain operations. Only persistent practice will render the student capable of quickly recognizing the cases in which a change of procedure is necessary, and careful attention should therefore be given to the construction. The drawings for the problem are to be made full size and of the dimensions given below.

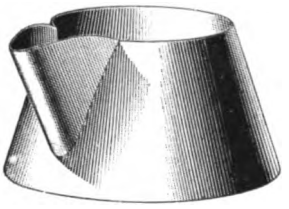

FIG. 34.

CONSTRUCTION.—Draw first the plan of the frustum that represents a portion of the body of the coffee pot, as in Fig. 35; a circle $2\frac{1}{2}$ inches in diameter represents the upper base and one 4 inches in diameter the lower base. Next, draw the elevation, in which the frustum is represented $2\frac{1}{4}$ inches high, and produce the sides of the cone until they meet in the vertex *O*. Fix a point *A* $\frac{1}{2}$ inch from the lower base, and by means of the 60° triangle, draw a line of indefinite length toward the upper part of the drawing, thus indicating the angle of inclination of the lip. In this case, the design of the cross-section of the lip is first arbitrarily determined, as shown in Fig. 35 (*a*). Draw the line *c d* perpendicular to *A b*, and on this as a center line construct the required cross-section; first describe, through the point *c*, an arc tangent to *A b* with a radius of $\frac{5}{16}$ inch, from a center located on the line *c d*, and draw lines tangent to this arc that will be at an angle of 45° to each other—thus forming angles of $22\frac{1}{2}$° on both sides of *c d*. Set the compasses to a radius of $2\frac{1}{16}$ inches, and with the point *A* as a center, describe an arc that will extend from the line *A b* to the point *e* on the upper base of the frustum. This arc defines the upper edge of the lip, and the intersection at *e* is then projected parallel

Digitized by Google

to *A b* in the manner shown, thus completing the outline of the cross-section at (*a*). This outline is next divided by spacing into a convenient number of equal parts, as indicated by the numerals *1*, *2*, *3*, *4*, *5*, etc. at (*a*). Carry projectors parallel to *A b* from each of these points and continue them indefinitely across the elevation of the frustum.

Before the line of intersection between the body of the coffee pot and the lip can be determined, it will be necessary to consider each of the lines just drawn in the elevation as the representation of a cutting plane, and then to produce each sectional view in the plan. This operation is precisely similar to that used in the problem of *Practical Projection* that relates to conic intersections, with the exception that the sections of the intersecting solid in this case are parallelograms, while in the problem referred to they are triangles. The construction is made as follows: Project the point *e* from the elevation to the plan, and draw an element from the vertex through this point in each view; draw the horizontal center line *w x* through the plan, and divide that portion of the outline of the lower base included between the points *w* and *p* into a convenient number of equal spaces—five in this case. An additional space may be laid off on the other side of the point *p* to aid in the continuation of these sectional curves, as shown in Fig. 35; from each of these points draw elements to the center *O'*, and also project the elements in the elevation.

The manner in which the sectional curves are then produced in the plan has been fully explained in *Practical Projection*, and the resemblance of this drawing to those representing the conic intersections given there may be readily seen if the figures are compared. In this comparison, note that each line drawn from the points *2*, *3*, *4*, *5*, and *6* at (*a*) is treated as a cutting plane, and the corresponding curve of the cone is then developed in the plan. After the sectional curves have been produced in the manner shown, the vertical center line *O O'* is drawn through both views and the perpendicular distances of the points *1*, *2*, *3*, etc. from the line *c d* at (*a*) are set off from the point *O'* in the

Digitized by Google

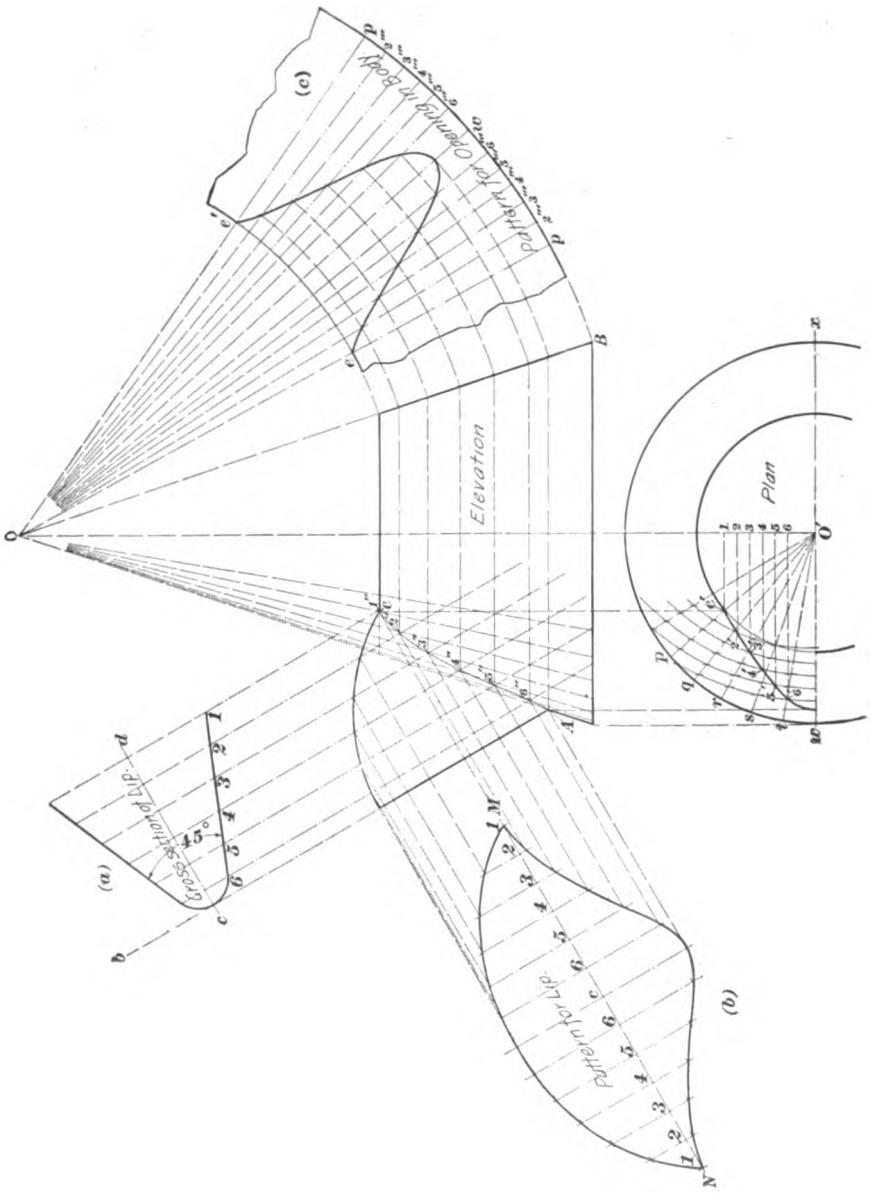


FIG. 35.

Digitized by Google

plan; thus, make $O'\,1$ in the plan equal to $1\,d$ at $(a)$, $O'\,2$ in the plan equal to the perpendicular distance from $2$ at $(a)$ to the line $c\,d$, etc. Horizontal lines are then drawn through these points in the plan and produced until they intersect each corresponding sectional curve at $c'$, $2'$, $3'$, etc. The points $c'$, $2'$, $3'$, etc. are then projected to the elevation at $c$, $2''$, $3''$, etc., and through these points may then be traced the line of intersection. This line is very lightly drawn in Fig. 35, since it is not desirable to complicate the drawing by adding lines not needed for the development. Having now defined in the elevation the correct lengths of the parallel lines of the lip, the development may be drawn in the usual manner. Lay off the stretchout $M\,N$ at right angles to $A\,b$ and indicate thereon the width of the spaces on the outline of the cross-section at $(a)$. These points being designated at $(b)$ by numerals and letters similar to those used at $(a)$, the completion of the pattern may be made without further instruction.

As the body of the coffee pot is sometimes cut out on the line of intersection of the two solids—or, if not cut out, is usually perforated within the limits of such lines in order to form a strainer—it is desirable that the pattern for the body, or enough to show the true form of the outline thus defined, should be developed. The line of intersection having already been determined, the development of the pattern for the outline of the opening, as at $(c)$, is a comparatively simple matter, although deserving careful attention from the fact that new elements must be drawn in the plan in order to determine the widths of the spaces on the stretchout. The points $2''$, $3''$, $4''$, etc. in the line of intersection in the elevation are first projected to the true edge line, as at $O\,B$. Next, the stretchout for the frustum is described from the center $O$ with a radius $O\,B$, as shown. Now, in the plan, it is necessary to draw new elements, as already mentioned, from the vertex $O'$ through the points $2'$, $3'$, $4'$, $5'$, and $6'$, and to produce these elements until they intersect the outline of the lower base. The spaces thus determined on the lower base will be found unequal, but are to be set off on the

Digitized by Google

stretchout at (*c*) in their regular order, as shown. Some care is necessary to prevent confusing these elements with those terminating at the points *q*, *r*, *s*, and *t*, but if the work is done slowly, such trouble may be avoided. Note that in Fig. 35 the new elements just mentioned are not shown either in the plan or in the elevation; by comparing the different spaces with the dividers, however, the student will be able to follow the process just described. The outline of the curve at (*c*) is finally completed by describing developers from the different points determined on the true edge line *O B*, and afterwards tracing the irregular curve through the points of intersection thus designated.

This interesting problem affords an opportunity for some very careful work on the part of the student, and if the drawings are accurately completed in accordance with the preceding instructions, and a model constructed from the patterns thus produced, the student will be more than repaid for the effort by the satisfaction experienced in observing the accuracy with which the pieces may be fitted together. He should then develop the patterns for other similar articles, using different proportions and dimensions and without reference to the descriptive text. After the student has discovered that difficult patterns may be laid out correctly and altogether by aid of the memory, he will rapidly acquire the confidence indispensable to the skilful pattern draftsman—he must, however, first be sure that, for any given case, the correct principles have been selected; he should then be able to complete the developments without assistance.

---

PROBLEM 12.

**45. To develop the patterns for a boss, or brace, for a can faucet.**

EXPLANATION.—When a faucet is soldered in the side of a tank, it is often desired to attach a suitable brace at the sides, as in Fig. 36, in order to strengthen the joint and

Digitized by Google

prevent it from breaking away from the can body. Such braces, being in plain sight, should present a neat appearance, and in order that they may do so, certain principles of design should be followed. It may seem trivial to devote much attention to a matter of apparently so little consequence, yet it is just this minute attention to the smaller details of construction that distinguishes the careful draftsman. There are cases in which the workman should not spend much time on the development of a brace; for example, if he has done the work before and remembers its general features, he will often be able to "rough out" a pattern for any required brace and make it so nearly accurate that only a little trimming will be required. Such practice as is found in the construction of this problem is therefore recommended to the student in order that he may avail himself of short methods in special cases.

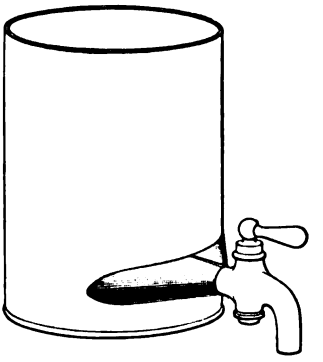

FIG. 36.

CONSTRUCTION.—These drawings may be made full size and on the assumption that the end of a faucet 1 inch in diameter is to be braced to a cylindrical tank 8 inches in diameter. First, draw the center line for the plan and elevation, as the line $A\,B$, Fig. 37, and from a convenient point $o$, describe a circle 1 inch in diameter to represent in the elevation a section through the end of the faucet. From another point $o'$, in the vertical center line, with a radius of 4 inches, describe an arc of indefinite length that shall represent a portion of the outline of the body of the tank, as the arc $C\,D\,E$, Fig. 37. Project the outlines of the faucet to the plan, and on one of these lines determine a point sufficiently far from the body to afford a proper brace—in Fig. 37, the point $x$ may be located $1\frac{3}{8}$ inches from the body, measured on the outline of the faucet. Next, decide on the angle that the brace will make with the lines of the

Digitized by Google

faucet; in this case, an angle of 45° may be conveniently taken, and the line $x\,y$ is accordingly drawn at that angle to the line $A\,B$. The line $x\,y$ represents the outline of the brace, and a cross-section of the brace must now be determined that will be at right angles to the line $x\,y$. This is a matter for the student to design at will, and the brace may

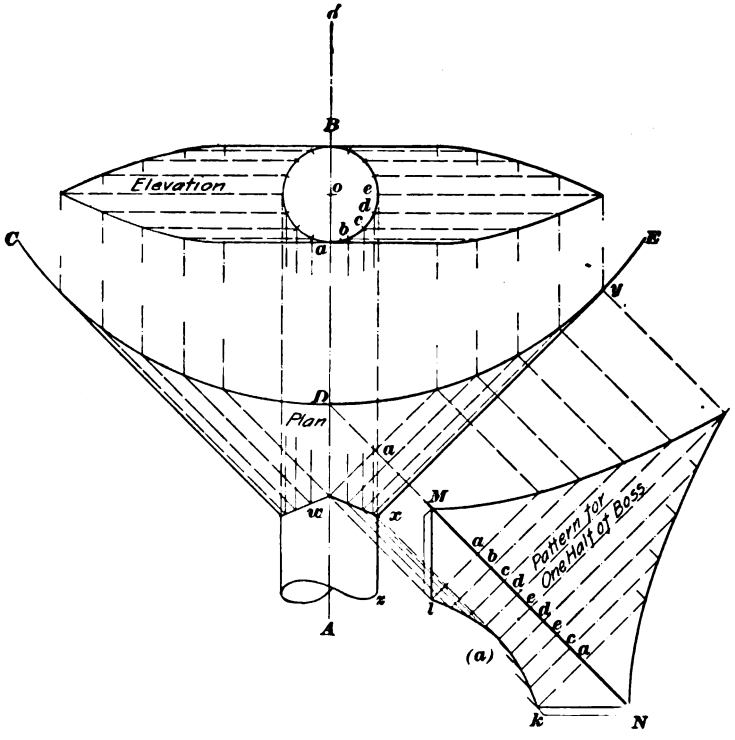


FIG. 37.

consist of an angularly bent piece of metal or it may be rounded to any suitable curve. If it is decided to make the brace with an angular bend, it is then necessary to determine a line of intersection between the cylindrical faucet shank and the chosen angular solid. This is true also when a brace having a curved outline in cross-section is selected;

Digitized by Google

but if it should be desired, as in this case, to make a brace that will have a cross-section similar to that portion of the faucet, the line of intersection may be at once drawn. Therefore, bisect the angle formed by the outlines of the solids—the lines $xy$ and $xz$—as at $xw$. This completes as much of the projection drawing as is required for the development of the pattern, although it is first necessary to determine points by means of which a sufficient number of edge lines may be represented. Divide one-quarter of the outline in the elevation into a convenient number of equal spaces, as at $a$, $b$, $c$, $d$, and $e$; project the points thus located to the line of intersection $wx$ in the plan, and thence carry the assumed edge lines across the surface of the boss and parallel to the outline $xy$, as in Fig. 37.

The stretchout $MN$ may now be laid off at right angles to $xy$ and in the position shown; make $Ma$ of the stretchout at ($a$) equal to $Da$ of the plan, and set off the remaining spaces thereon equal to the similarly lettered spaces of the elevation. Draw edge lines and developers, and complete the outline of the pattern thus produced by tracing the irregular curve through the points determined. It is customary to cut out such braces in two pieces of metal, but if, for any particular piece of work, it should be desired to make a brace that will show no seam on the upper side, the pattern may be joined as on the line $Ml$ at ($a$) and cut out in one piece. If, however, two pieces are to be used, a soldering edge should be left on the pattern on the lines $Ml$ and $Nk$, as shown in Fig. 37.

The completion of the projection drawing is not a necessary part of the work, but is very easily accomplished as follows: The remainder of the outline of the circle in the elevation is spaced as in the figure, and from points thus fixed projectors are drawn indefinitely toward both the right and the left sides of the drawing; these projectors are then intersected by projectors drawn from the intersection of the edge lines of the brace with the body of the can in the plan. It is necessary, of course, to do the same amount of work on both sides of the center line $AB$.

Digitized by Google

PROBLEM 13.

**46. To develop the pattern for an oil-can breast and spout.**

SPECIFICATION.—The oil can shown in Fig. 38 is 10 inches in diameter and the pitch of the breast may be taken as 45°. The axis of the cone that forms the spout of this can is at right angles to the slanting sides of the breast, and the angle included between the true edge lines of this cone is one of 25°. The opening at the outlet of the spout is 1 inch in diameter, and the relative position of the two cones should be such that, when the can is filled entirely up to the screw top, none of the contents will overflow at the spout.

CONSTRUCTION.—From the foregoing information, the projection drawings shown in Fig. 39 may be readily constructed, and after their completion it will be seen that the development may be accomplished by the method of developing the surfaces of intersecting cones that was fully explained in *Development of Surfaces*. The cones here required are constructed to proportions somewhat different from those of the problem referred to, but the method of development is the same. The drawings may be made half size, that is, 6 inches to 1 foot.

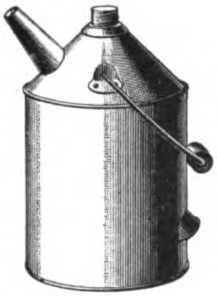

FIG. 38.

After the outlines of the cones have been drawn, the first step is to represent the line of intersection. This process, in accordance with instructions given in *Practical Projection*, consists in outlining the entire cone of the spout, drawing the half-full view of the base, and, by the light dotted lines in the elevation of Fig. 39, representing the elements of that solid; next, the sectional triangles are produced in the plan and then the sectional curves of the larger cone. The points *a*, *b*, and *c* are thus developed in the elevation, and the patterns for both solids may next be described—that for the spout first being drawn. These operations require no further explanation, as similar work has already been done

Digitized by Google

by the student. Notice that in this case the pattern for the opening in the breast of the can is developed at (*b*), while

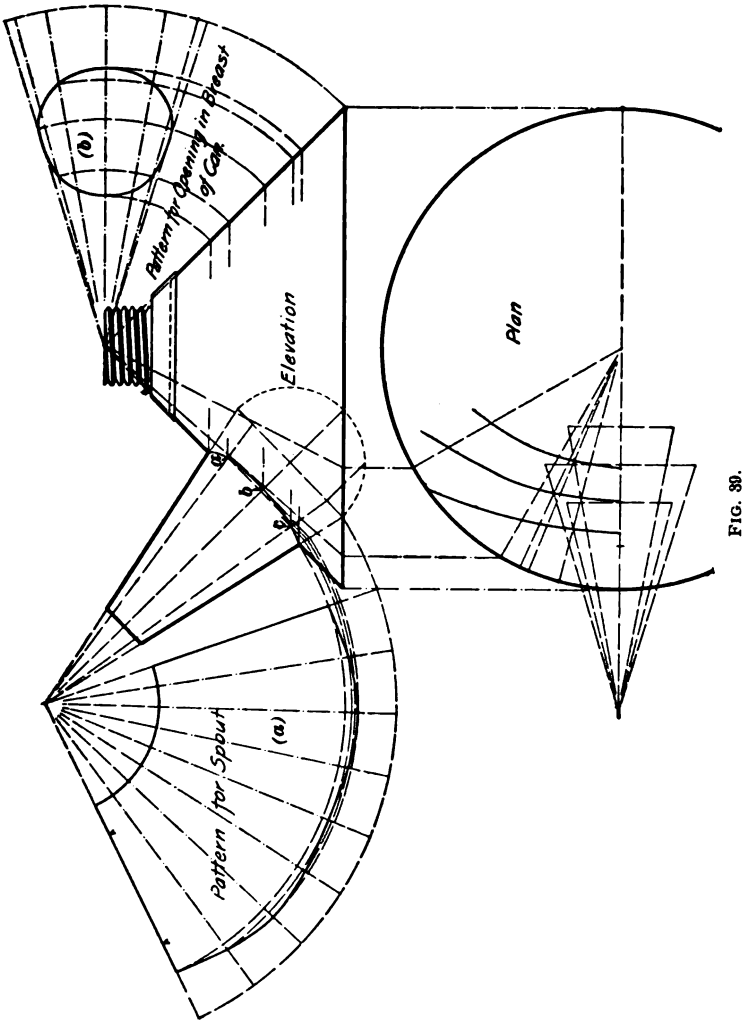


FIG. 39.

the pattern for the breast itself is not shown in Fig. 39. When making actual patterns, it would be convenient to lay off the developments for the smaller cone and for the

Digitized by Google

opening in the breast on the drawing paper, while the full pattern for the breast could be made directly on the metal by the aid of the dividers and a straightedge, thus avoiding unnecessary work. The pattern for the opening at (*b*), Fig. 39, may then be cut from a separate piece of metal and marked in its proper place on the breast pattern.

CAPACITY.—Suppose, in this instance, that it is desired to construct a can that, when filled to the bottom of the screw top, will hold 8 gallons, disregarding any amount of the contents that may be held in the spout. The diameter of the oil can is given as 10 inches. Looking in the table of Areas in *Arithmetic*, Part 9, it is found that the area of a circle 10 inches in diameter is 78.54 inches; then, the volume of the breast—considered as a full cone when the screw top is neglected—is found by multiplying the area of the base by the height of the cone, and dividing the result by 3; or, $78.54 \times 5 = 392.7$, and $392.7 \div 3 = 130.9$. Since there are 231 cubic inches in a gallon, there are $8 \times 231$, or 1,848 cubic inches in 8 gallons. The number of cubic inches contained in the breast (130.9) is now deducted from the total number to be held in the can, or $1{,}848 - 130.9 = 1{,}717.1$. Dividing this number by 78.54, the area of the base, the required height of the can may be found. Therefore, $1{,}717.1 \div 78.54 = 21.86+$, or about $21\frac{7}{8}$ inches. The dimensions for a can of any desired capacity may thus be readily found and the patterns for the body and bottom immediately laid out. Such problems are frequently encountered in shop practice and the arithmetical calculations should be very carefully made.

---

PROBLEM 14.

**47. To develop the patterns for a wash boiler and cover, the cover to be slightly pitched.**

SPECIFICATION.—Wash boilers are commonly designated by numbers, as No. 7, No. 8, etc., corresponding to the size of the stove or range on which they are to be used. Since

Digitized by Google

these sizes indicate the diameter of the opening through the top of the stove, 2 inches is usually added to this figure to determine the width of the wash boiler, while the length is such that two openings of the stove will be covered; thus, the extreme dimensions in the plan for a No. 8 boiler are usually $10'' \times 21''$. The height of the sides is generally 14 inches—or rather such height as tin 14 inches wide will produce after allowing for double-seaming and wiring edges.

Special sizes of tin, called wash-boiler sizes, may now be had, and it is customary to make the bodies of such plate in order to avoid additional side seams. The wash boiler shown in Fig. 40 may be considered a No. 8 size, and the drawings are to be made by the student to a scale of 3 inches to 1 foot, according to the dimensions previously given, the necessary working drawings being shown in Fig. 41.

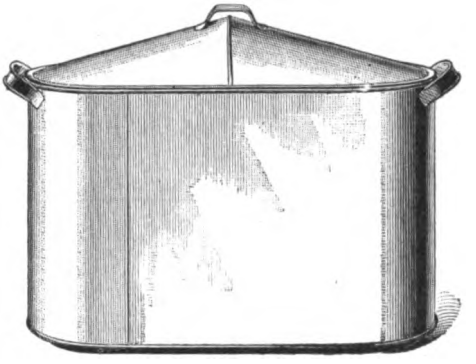

FIG. 40.

CONSTRUCTION.—Draw the plan first, and since from this drawing—in connection with the specifications—the dimensions of the pattern for the body and the bottom may be laid off directly on the metal, no further drawings are required for these parts. Before the pattern for the cover can be developed, however, an elevation showing the amount of pitch must first be constructed; in order to show the construction to better advantage, a pitch that is perhaps unusual in actual practice may be adopted and a height of 3 inches set off on the center line at $A\,B$; the triangle that represents the elevation is then completed, as shown at $e\,B\,e'$, Fig. 41. On examining the drawings, it is seen that the surface thus represented may be readily developed if it is



Digitized by Google

resolved into its component parts. It is not difficult to recognize the fact that those parts bounded by the curved

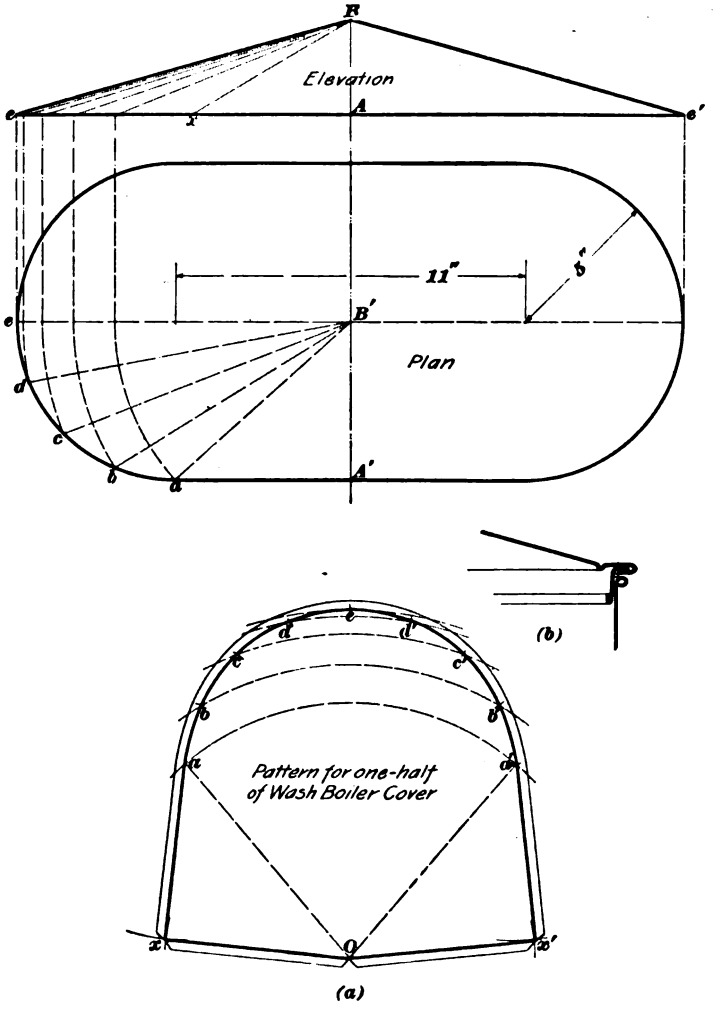


FIG. 41.

outline and sloping toward the point $B'$ in the plan—that is, $B'$, $a$, $b$, $c$, etc.—are portions of the surface of a scalene

Digitized by Google

cone; their development, therefore, may be accomplished by the method of developing the surface of a scalene cone shown in *Development of Surfaces*, while those parts not included in this description are seen to be plane surfaces and may readily be reproduced in the pattern by merely recopying their forms full size. Draw a horizontal center line through the plan and divide the curved portion of the outline in one-quarter of that view into a convenient number of equal spaces, as at $a$, $b$, $c$, $d$, and $e$. From $B'$ as a center, describe arcs, respectively, from $a$, $b$, $c$, and $d$, producing such arcs until they reach the horizontal center line; thence project their intersections until they reach the base line of the cover in the elevation. The true lengths of the elements of the scalene cone may now be taken from the elevation, as represented by the dotted lines in that view, and at any convenient point on the drawing, as at $O$ in $(a)$, concentric arcs are to be described, as shown. Draw any radius, as $O\,a$, at $(a)$, and with the dividers set to the distance $a\,b$ taken from the plan, step off spaces equal in number to those contained in one-half of the plan. This completes the development of the required surface of the scalene cone, and the remainder of the surface of the cover is then found as follows: Set the compasses to a radius equal to the distance $A'\,a$ of the plan, and from $a$ and $a'$ at $(a)$, describe arcs of indefinite length; intersect these arcs by other arcs described from $O$ as a center and with a radius equal to the true length of the line $B'\,A'$ of the plan. This true length is found by making $A\,x$ of the elevation equal to $A'\,B'$ of the plan and taking the distance $B\,x$ from the elevation. The pattern for one-half of the complete cover is thus developed at $(a)$. Suitable edges are next to be allowed. A lock seam must be provided along the lines $O\,x$ and $O\,x'$, and on the remainder of the outline sufficient stock must be added to allow for the projection of the cover over the wiring edge of the body and for securing, or locking, the rim. An idea of what is required may be gained from an inspection of the drawing at $(b)$, which shows an arrangement usually made.

Digitized by Google

CAPACITY.—It will be seen that the solid represented by the wash boiler in this problem may be resolved into two simple forms whose volume may be readily ascertained; one, a prism whose dimensions are 10 inches wide, 11 inches long, and 14 inches high, and the other, a cylinder 10 inches in diameter and 14 inches high—the cylinder being divided axially and one-half placed at each end of the prism. The volume of the wash boiler is, therefore,

$$10 \times 11 \times 14 = 1{,}540$$

and $$10^2 \times .7854 \times 14 = 1{,}099.56$$

$$2{,}639.56$$

$2{,}639.56 \div 231 = 11.42+$, or about $11\frac{1}{2}$ gallons.

---

PROBLEM 15.

**48. To develop patterns for a scale scoop.**

EXPLANATION.—The form of scale scoop most commonly used in weighing general merchandise is shown in Fig. 42.

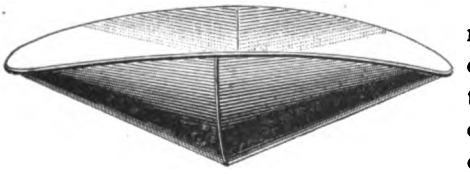

FIG. 42.

The pattern draftsman is at liberty to consider the two sections of which it is composed as segments either of the cylinder or of the cone. In the latter case, the ends of the scoop will be somewhat smaller than if a segment of a cone were used. Scoops intended for use on what are termed "tea scales" are invariably segments of a cone, and are usually provided with a funnel-shaped appendage at one end, as in Fig. 43. The scoop may then be conveniently used in retailing such substances as tea, coffee, etc., commonly poured from the scoop into a paper bag or package. The cylindrical form of scoop is, however, to be preferred for scoops of large dimensions, or when the scales are intended for use with larger bodies. Two cases will be considered and developments made, first

Digitized by Google

for a scoop composed of segments of the cylinder, as in Fig. 42, and second, for a scoop made from segments of a cone and provided with a funnel-shaped opening at one end, as in Fig. 43.

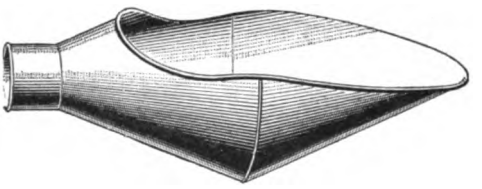

FIG. 43.

The scoop shown in Fig. 42 will first be developed. As already stated, it is constructed on the supposition that its surfaces are portions of intersecting cylinders. The extreme width is to be 10 inches and the length 16 inches; a semicircle may be taken as the section at right angles to the parallel lines of the solid, the angle of inclination being indicated in Fig. 44. The specification for the scoop whose development is shown in Fig. 45 is given in the construction of that drawing. Both drawings may be made to a scale of 3 inches to 1 foot.

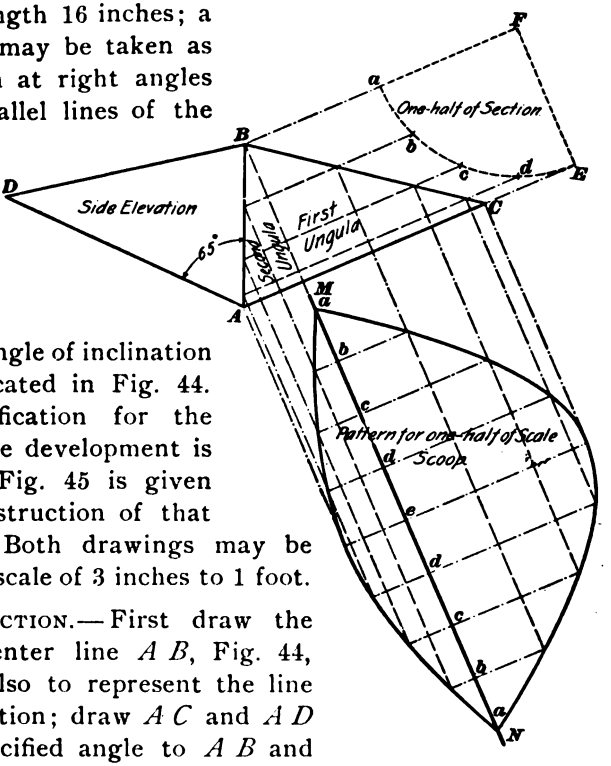


FIG. 44.

CONSTRUCTION.— First draw the vertical center line $A\,B$, Fig. 44, which is also to represent the line of intersection; draw $A\,C$ and $A\,D$ at the specified angle to $A\,B$ and produce $A\,C$ indefinitely toward the right. Also draw $B\,F$ parallel to $A\,E$. At any convenient

point on the line $A E$, as at $E$, erect the perpendicular $E F$, and from $F$ as a center, describe a quarter circle whose diameter will be equal to the required width of the scoop, the outline of the arc passing through the point $E$, as shown in Fig. 44. Complete the side elevation of the scoop by drawing $B C$ and $B D$. Locate edge lines on this elevation by subdividing the outline of the section and drawing projectors across the elevation in the manner shown. The development may now be made in the usual way. Draw the stretchout $M N$ and space off on its length the widths $a b$, $b c$, $c d$, etc., as taken from the outline of the section; draw edge lines and developers and trace the curved outline of the pattern as shown in Fig. 44.

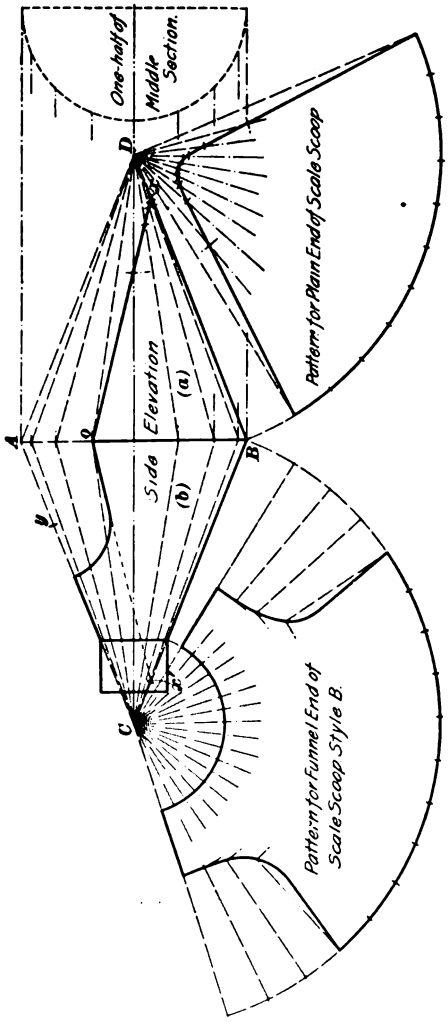


FIG. 45.

As previously stated, the scoop shown in Fig. 43 is made up of parts that are considered as irregular conic frustums. This being the case, the projections may be made to better advantage if the cones are first represented in their full outline, as in Fig. 45,

Digitized by Google

and the frustums afterwards designated by suitable lines on the drawing. Draw the lines $A\,B$ and $C\,D$ at right angles to each other and intersecting at their middle points; make $A\,B$ 7½ inches long and $C\,D$ 19 inches long; draw $A\,C$, $A\,D$, $B\,C$, and $B\,D$. This figure is now considered as representing two cones whose bases unite on the central plane $A\,B$, and the end view of the middle section of the compound solid may be represented as a circle described as shown at the top of the drawing. Represent a certain number of elements of these cones by dividing the outline of the circle into 16 equal parts, in the manner shown and projecting to the side elevation, as in Fig. 45. The remaining lines of the scoop may now be drawn as follows:

Fix the point $o$ on the base line of the cones at the intersection of the elements $D\,o$ and $C\,o$; fix the points $x$ and $x'$ 1½ inches from $D$ and $C$, respectively, and draw $x\,o$ and $x'\,o$. Fix the point $y$ 3 inches from $A$, and from $y$ as a center, describe an arc tangent to the line $x'\,o$. At the lower side of the figure add the rectangular portion that represents in the elevation the cylindrical spout of the funnel, thus completing the elevation of the scoop.

From the drawings in Fig. 45, the development of the patterns for the various parts of the scoop may now be seen to be the same as have been shown in previous sections of this Course, and they will, therefore, require no further description. A lock seam is to be provided along the joint edges of the patterns, and since it is usual to stiffen the top edges of the scoop with a heavy wire, such allowances may be made in accordance with previous instruction, although they are not shown in Fig. 45.

Capacity.—The mechanic is seldom required to calculate the capacity of such articles as have been illustrated in this problem. The volume of such solids, however, is found by the application of the rules for the ungula, and since a better illustration is furnished in a later problem, the solution is omitted in this instance. It will be seen from Fig. 44 that the scoop there shown may be readily resolved into symmetrical halves, each of which is composed of two

Digitized by Google

cylindrical ungulas, while in the case of the scoop shown in Fig. 45, the sections are to be considered as conic ungulas. The application of the prismoidal formula is made in each instance, precisely as in Problem 5.

---

PROBLEM 16.

**49. To develop patterns for a grocer's scoop.**

EXPLANATION.—In recent years, or since the introduction of power machinery for the manufacture of tinware, stamped scoops have almost universally displaced the kinds formerly made by hand, but it frequently happens that the tinsmith is asked to make a scoop of a special size to suit a particular requirement. The one shown in Fig. 46 is the form usually made. In this problem the student's attention is directed to the manner in which any irregular section of the cylinder may be produced. The application of methods, therefore, contemplates a use beyond the present construction.

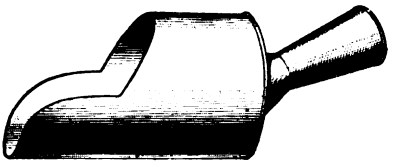

FIG. 46.

The body of this scoop is to be 10 inches in length and 6 inches in width, and is to be cut from a cylindrical form to the outline indicated in Fig. 46. A conveniently proportioned handle, slightly inclined, is to be attached to the back and strengthened by the addition of a flaring boss. The drawings are to be made by the student to a scale of 3 inches to 1 foot.

CONSTRUCTION.—Describe the circle shown in Fig. 47 (*a*), whose diameter will be equal to the width of the scoop—the diameter of the cylinder from which the body is to be cut. Draw the vertical diameter *a b*, and, by spacing, divide one-half of the outline into a convenient number of equal parts, in this case, eight. Next, construct the side elevation of

Digitized by Google

the scoop as shown to the right of (*a*). Make *A B* 10 inches long, as set off on the horizontal drawn from *b*; erect *B D* perpendicular to *A B* and make *C D* 4 inches long on the horizontal drawn from *a*. From *C* draw a line inclined at 30° to the vertical lines of the drawing and continue it

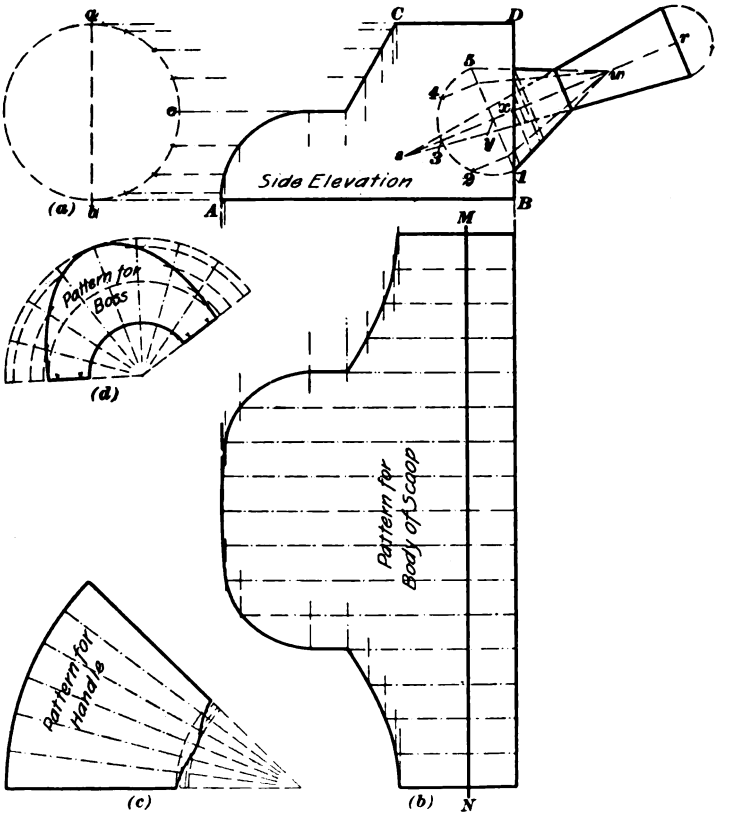


FIG. 47.

downwards until it intersects a horizontal drawn from *c* at (*a*). Describe an arc tangent to the horizontal drawn from *c* and passing through the point *A* in the manner shown. This completes the drawing of the body of the scoop in the required side elevation.

Digitized by Google

The handle is conveniently formed by two cones—or, rather, two conic frustums—the center lines of which coincide and may be drawn as one line from a point *x* midway on the line *B D* and at an angle of 67½° to *B D*. Produce this line indefinitely in both directions from *B D* and locate the point *r* 6 inches from *x*. For the vertex of the cone, fix the point *s* 4 inches from *x* and to the left of the line *B D*. At right angles to the line *r s*, and passing through the point *r*, represent the base of that cone by a line 2½ inches long; then draw the remaining outlines of the cone and the semicircle that represents the half-full view of the base. At *w* and *y* fix the points for the vertex and base of the cone that is to contain the frustum for the boss, *w* being 3½ inches from *x* and *y* 4½ inches from *w*. At *y* erect a perpendicular to *r s* and produce it until it intersects *B D* at *1*; make *y 5* equal to *y 1*, draw *1 w* and *5 w*, and describe the full view of the base of this cone as in Fig. 47. Represent in the usual way a convenient number of elements on each of these cones. From points on the outline of the end view of the cylinder at (*a*), draw horizontal lines intersecting the outline of the side elevation, and when this is done, the development of the patterns for the various parts of the scoop will follow without difficulty. First, draw the stretchout *M N* in the position shown and proceed to develop it in the usual way, the spaces shown at (*a*) being set off in the usual manner. After the edge lines have been drawn, developers will determine the outline of the pattern at (*b*), which is all that is required for the body of the scoop.

In these drawings it is more convenient to develop the patterns for the two frustums as shown at (*c*) and (*d*), since, if the pattern radii were described from the vertexes of the cones in the side elevation as centers, the drawing would be too complicated. The required radii are, however, taken from the projection drawing in the usual way, and that drawing shows all required points as projected to their respective true edge lines.

No further explanation is needed with respect to the allowances required for wiring edges or for locks and

Digitized by Google

double-seaming. As in the preceding problem, the capacity of articles of this description is not of sufficient importance to warrant the rather lengthy description that would be required, and that feature is therefore omitted from this problem.

---

PROBLEM 17.

**50. To develop the patterns for an oil-tank top.**

EXPLANATION.—An oil tank of a form frequently used is represented in Fig. 48. This illustration shows that the height of the top, or cover, must be such that, when the tank is closed, as represented at (*a*), sufficient headroom will be provided for the pump, as well as for the funnel and

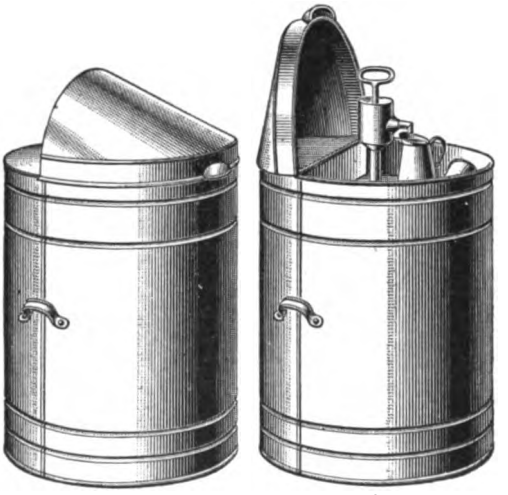


FIG. 48.

measure usually placed on the draining shelf. Part of this height is provided for by the width of the flange in the lower portion of the cover, part by the depression in the upper portion of the tank, and the remainder by the slant given to the curved surface of the top. As with most articles made by sheet-metal-working establishments, oil tanks

Digitized by Google

are made in a variety of sizes and styles. Their proportions and the proportions of the covers are often varied at the pleasure of the draftsman and to suit the requirements of special uses, as well as to accommodate the forms to whatever machinery is at hand for their manufacture.

The particular form represented in Fig. 48 is such that the triangulation process must be resorted to in order to

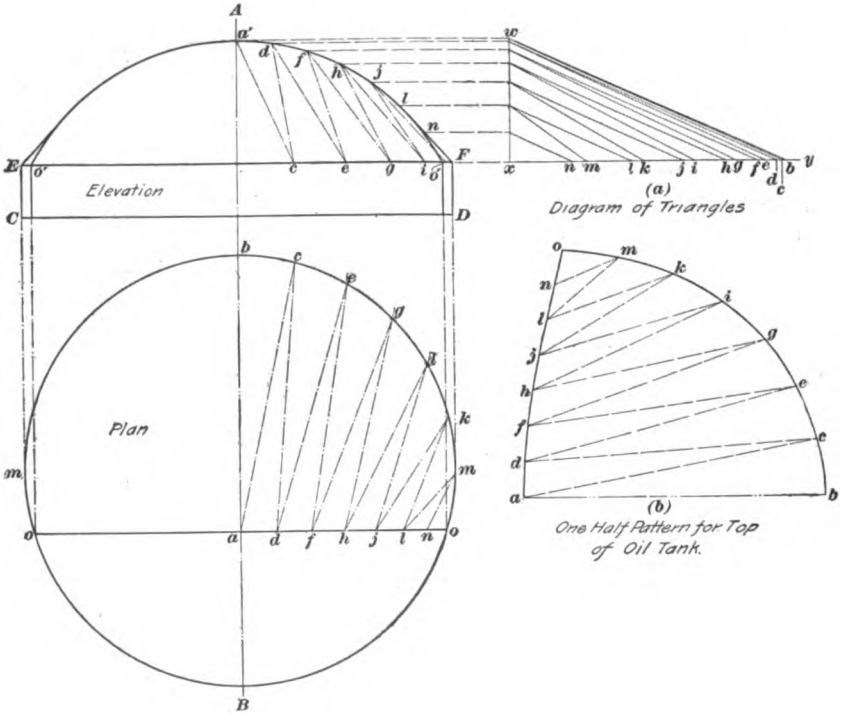


FIG. 49.

obtain a development of its curved surface. The drawings for this problem are to be constructed by the student to a scale of 3 inches to 1 foot, and may be assumed to represent a tank of 60 gallons capacity. Referring to the table in *Arithmetic*, Part 10, it is seen that a tank $24\frac{1}{2}$ inches in diameter and $29\frac{1}{2}$ inches in height will contain the requisite number of gallons. It is customary to allow a depth of

Digitized by Google

about 4 inches for the draining shelf, so this amount must be added to the height of the main tank body when laying out that pattern. It may be assumed that a clear space of 10 inches in height and 20 inches in width should be allowed in order to provide for the headroom previously referred to. Further, the width of the top should be such that the pump may be attached centrally in the tank. The method of designing the top from these specifications is clearly shown in the construction, which should be carefully followed by the student.

CONSTRUCTION.—Since the top is the important matter in this problem, no attention will be paid to other details. First, describe a circle 24½ inches in diameter, as shown in Fig. 49, that will represent a view of the tank in the plan; draw the vertical center line $A\,B$ and produce it indefinitely toward the top of the drawing; 3½ inches below the center of the circle draw the horizontal line $o$–$o$, which is to represent the back of the cover in the plan. This completes as much of the plan as is necessary, and the elevation is next to be drawn. In a convenient position above the plan, draw the horizontal line $C\,D$ of indefinite length, and 3 inches above $C\,D$ draw $E\,F$ in the manner shown. Project the extremities of the circle at $m$, $m$ from the plan to the elevation, or, in other words, draw $C\,E$ and $D\,F$ in the elevation; also project the points $o$, $o$ as shown in Fig. 49. The upper outline of the cover is to be arbitrarily drawn in the elevation by means of an arc described with a proper radius from a center located on the center line $A\,B$; find this radius by setting off the point $a'$ on the center line 7 inches above the line $E\,F$, and describe an arc that will pass through the points $o'\,a'\,o'$ by the method of describing a circle through three points that was given in *Geometrical Drawing*. From the points $E$ and $F$ draw lines tangent to the arc described, thus completing the elevation.

It will now be seen that a development must be produced for a surface whose base is represented by the line $E\,F$ in the elevation, whose elevation is $E\,a'\,F$, and whose plan is the larger segment of the circle in the plan. Further, it

Digitized by Google

will be seen that the center line *A B* divides the figure into symmetrical halves, and that the development need be produced for only one of these sides, a duplication of the work, of course, being the required pattern.

The upper portion of this cover has a "warped" surface, and is therefore capable of development only by triangulation. The first step is to locate a number of triangles thereon in some regular order of succession, and to do this, the outline of the curve in the plan is conveniently stepped off into seven equal spaces at *b*, *c*, *e*, *g*, etc., and these points are projected to the line *E F* of the elevation. Next, the arc *a' o'* in the elevation is divided into a similar number of equal spaces, as at *a'*, *d*, *f*, *h*, etc., and these points are in turn projected to the plan. The triangles on the irregular surface may now be designated by drawing lines between successive points, as *a c*, *c d*, *d e*, etc., *a b* being on the center line. By means of the diagram of triangles, the true lengths of these lines must next be determined, as shown at (*a*). Construct the right angle *w x y*—the side *x y* being the line *E F* prolonged—and on *x y* set off from the point *x* the length of each line shown in the plan. From the elevation project the points *a'*, *d*, *f*, *h*, etc. in the manner shown, and draw the hypotenuse of each right-angled triangle thus designated. From this point, the construction of the pattern is similar to those that have been given in the earlier portions of the Course, but since the method of constructing the triangles is somewhat different from that shown in previous problems, the following description is given:

Draw the line *a b* at (*b*) and make it the same length as the hypotenuse of the triangle at (*a*) whose base is *x b*. Since the upper terminal of this hypotenuse is defined by the projection of the point *a'* from the elevation to the drawing at (*a*), this hypotenuse is the true length of the line *a b* of the plan. Next, from *b* as a center, with a radius *b c* (taken from the plan), describe an arc of indefinite length. Intersect this arc at *c* by an arc described from *a* as a center with a radius equal to the true length of the

Digitized by Google

line *a c* of the plan, that is, the hypotenuse of the triangle at (*a*) whose base is *x c*. In a similar manner, the remaining portion of the drawing at (*b*) is constructed. Since the points of this development are lettered like corresponding points in the plan and elevation, further description is unnecessary. The pattern shown at Fig. 49 (*b*) is of course for only one-half of the outline required, and the figure is, therefore, to be duplicated and suitable edges allowed.

For the remaining portions of the cover, no drawings are necessary, since the back is shown full size in the elevation; and for the rim it is necessary merely to space the outline shown in the plan, construct the parallelogram, and add the required edges. These matters, being similar to the patterns of former problems, need no explanation.

---

### PROBLEM 18.

### 51. To develop the patterns for an oil-pump head.

EXPLANATION.—Fig. 50 is an enlarged view of the pump shown in position in the tank illustrated in Fig. 48. As will be seen from the perspective figure, the pump consists essentially of a cylindrical barrel in which the plunger moves, while the upper portion is enlarged into a cylinder of larger diameter, braced to the barrel cylinder by a boss in the form of a conic frustum. The outlet is slightly tapered, the outer end being in the form of an elbow. Such outlets are often braced to the intersected body by means of a conical boss, as shown in Fig. 48, a description of a boss similar to this forming the subject of Problem 19. An inverted cone of slight altitude forms the cover of this pump head and serves as a drip by which the

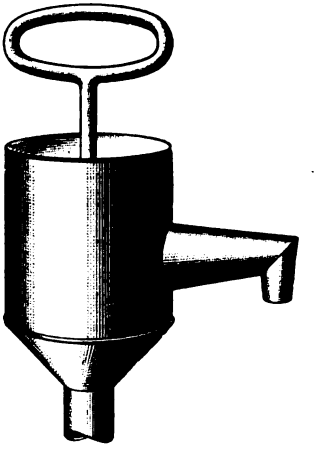

FIG. 50.

Digitized by Google

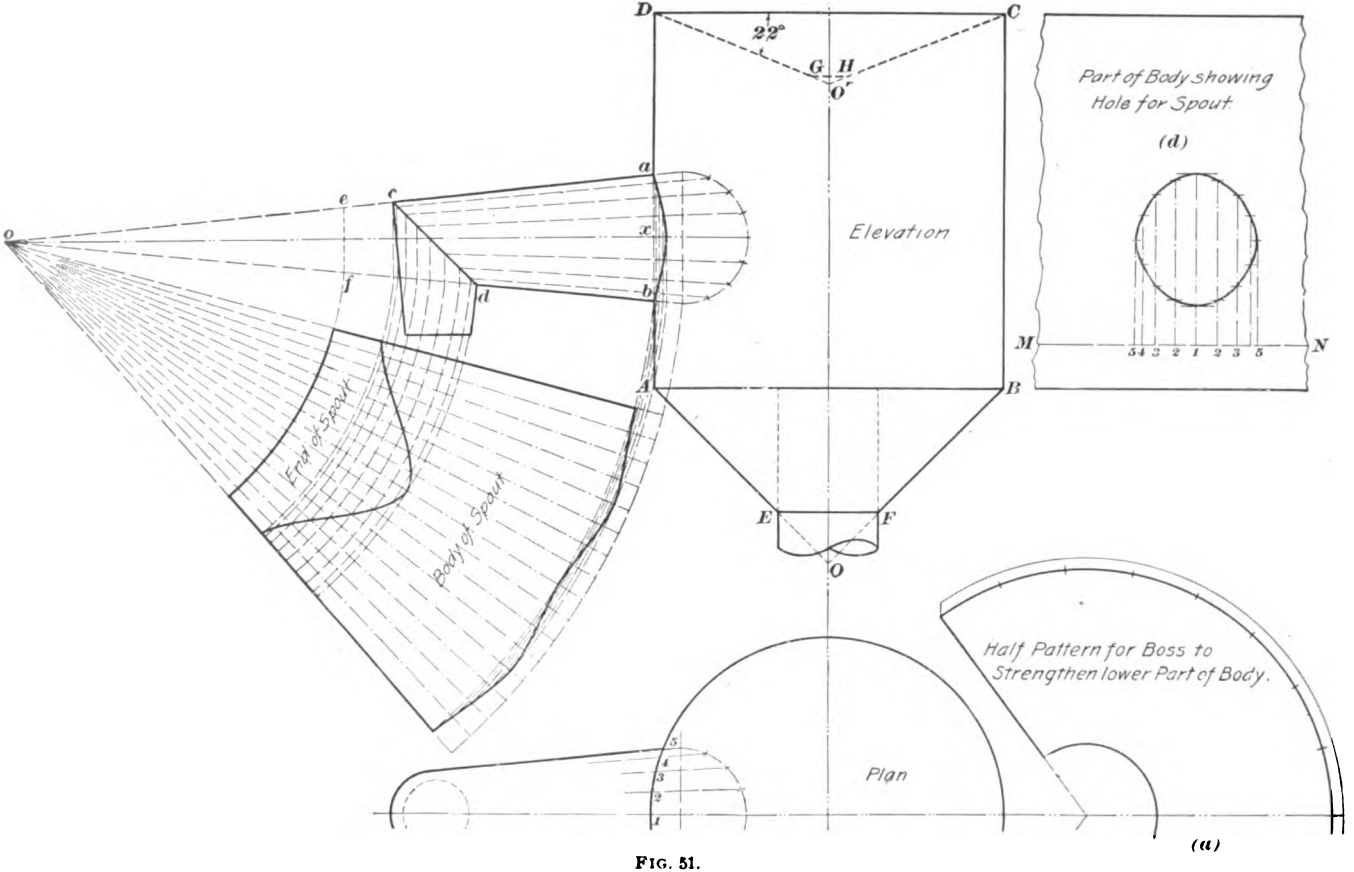


FIG. 51.

Digitized by Google

oil carried up by the plunger rod is returned to the pump.

Since the main barrel of the pump consists of a simple tube, or cylinder, its pattern needs no explanation, and the drawings will, therefore, contain a description of only the upper portion of the pump. The fittings for these pumps —that is, the valves and plunger—are usually made of malleable iron and may be purchased from jobbing houses that deal in tinners' supplies. It is well, therefore, to ascertain their exact diameter before commencing the patterns for the pump barrel. These drawings may be constructed by the student in their full size; and since the dimensions are necessarily stated in the directions for the construction of the projections, the usual specifications are omitted.

CONSTRUCTION.—The diameter of the barrel in this case is 1 inch, and that of the head $3\frac{1}{2}$ inches; the height of the head may be conveniently taken as $3\frac{3}{4}$ inches. The elevation of the body of the head may, therefore, be represented by a parallelogram constructed to the given sizes, as shown by *A B C D*, Fig. 51, the half plan of the head being represented by a semicircle of the proper size, as indicated in Fig. 51. Represent also a portion of the barrel in the elevation and draw the boss for bracing the head to the barrel cylinder. The outline of this boss is given an inclination of 45°, as represented by the lines *A E* and *B F*, which should be produced, as shown by the dotted lines, to the vertex *O*. The pattern for this boss should next be described. The simple frustum shown in the projections needs no explanation, the pattern being developed as shown at (*a*). The outlines of the cover may next be defined in the elevation, as shown by the lines *D G* and *C H* drawn at the angle indicated in Fig. 51. The pattern for this frustum, being determined in the way adapted to conic frustums, is not shown in the illustration. Edges required for construction should be allowed on both patterns. Rims for such covers are made straight or flaring, at the pleasure of the draftsman—if straight, they are merely narrow strips of metal, and if flaring, they are treated as conic frustums.



Digitized by Google

Many shops are provided with a rim machine so constructed as to form from a straight strip of metal a flaring rim well adapted for this purpose; and since these machines are not expensive and their work very expeditiously done, flaring rims are more commonly made by this process than by the old way of laying out a flaring pattern.

Attention is now directed to the manner in which the spout is determined and developed. As previously stated, it is customary to make the spout with a slight flare, or taper, that is, to consider it as a conic frustum. An elbow being required in order that the discharged oil may flow directly downwards, the manner of representing it is deserving of careful attention. Fix any convenient point on the side *A D*, as at *x*, 1½ inches from *A*, and draw a horizontal line indefinitely toward the left; produce the line also about 1 inch toward the right. The height of the opening in the body of the pump head is now set off along the line *A D*, the point *x* being taken as the center of the opening, which may be conveniently made 1¼ inches high; a distance of ⅝ inch is, therefore, to be set off at *x a* and *x b*. Next, set off the point *o* 6½ inches from *x*, and complete the cone by drawing *o a* and *o b*; these lines should be produced slightly beyond *a* and *b* and a temporary base and full view drawn in the manner shown. Now, determine the exact line of intersection between the cone thus represented and the cylinder that represents the pump head—this operation is already familiar to the student and needs no further explanation.

It was shown in *Development of Surfaces* that a pattern for a two-pieced elbow is produced by drawing a development of a cylinder intersected by a plane at an angle of 45°. This property is also true of the cone, provided the cutting plane makes the required angle with the axis of the cone. Hence, draw a line at an angle of 45° with the axis *o x*, as the line *c d*, which may be considered as the line of intersection of the two portions of the cone. The portion thus cut from the cone is shown in its readjusted position in Fig. 51; but this work need not be done by the student, since it is not required for the development of the pattern. The

Digitized by Google

point $c$ is $2\frac{5}{8}$ inches from $a$, and the distance between $c$ and $e$, Fig. 51, is $\frac{1}{4}$ inch. The problem now becomes one of developing the irregular frustums $e\ f\ d\ c$ and $c\ d\ b\ a$, and since this subject has already been fully explained in this Course, the student needs no further instruction.

The pattern for the body of the pump will, of course, be a parallelogram with an opening of irregular outline at the intersection of the spout. This opening is so nearly round that most mechanics are accustomed to cut it out perfectly round with a hollow punch. This answers all purposes where the article is small, but when large work is undertaken, a careful development should be drawn, as in certain problems of *Development of Surfaces*. This is accomplished by drawing the stretchout $M\ N$ and setting off thereon the spaces *1–2*, *2–3*, *3–4*, etc., taken from similarly designated spaces in the plan. Edge lines, indicated in Fig. 51, are then drawn in the usual way and the resulting figure at (*d*) is the outline required.

---

PROBLEM 19.

**52. To develop the patterns for a conical boss.**

EXPLANATION.— It is usual to strengthen the spout of a pump like that shown in Fig. 50 by the addition of a brace, or boss, made in conical form and arranged in the manner illustrated in Fig. 52. As may be seen from the figure, the boss consists of a frustum whose upper base joins the spout and whose lower base intersects the body of the pump head. The drawings may be made full size, as in the last problem; and since this work might be considered a continuation of that problem, the main outlines of the plan and

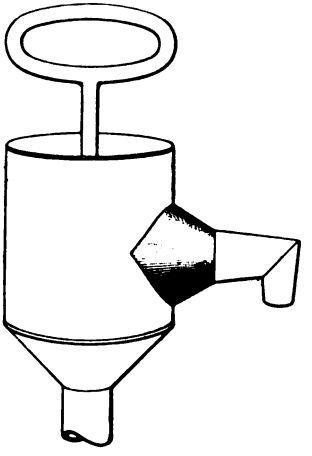

FIG. 52.

Digitized by Google

elevation of Fig. 51 may be copied on a sheet of clean paper as shown in Fig. 53. The specifications for the boss are stated in the following construction:

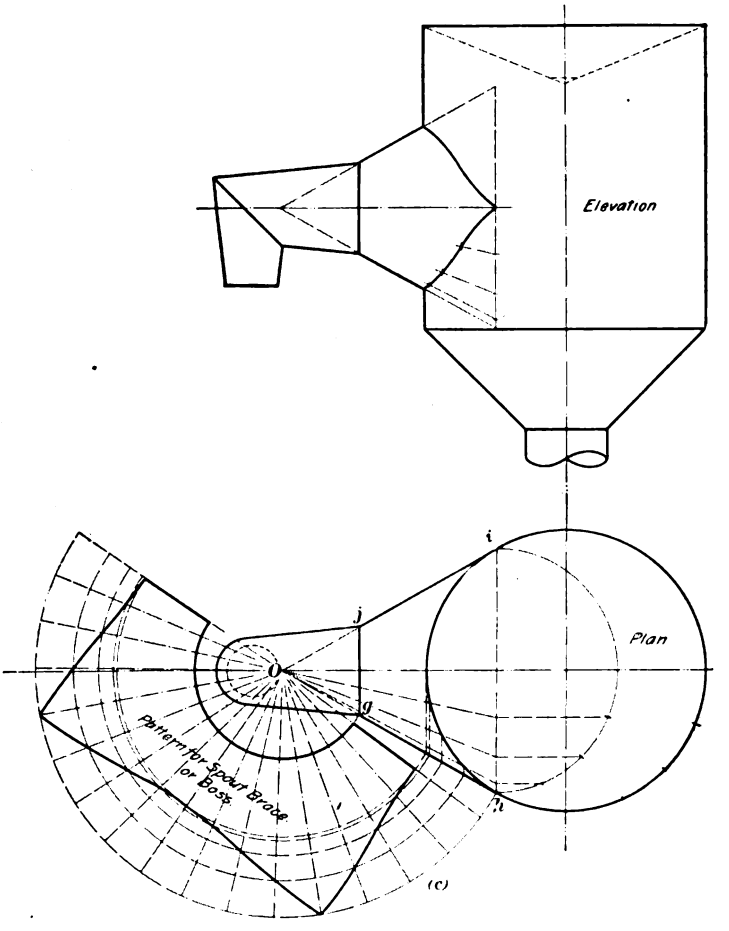


FIG. 53.

CONSTRUCTION.—The angle of inclination of this boss is first determined at the pleasure of the draftsman; in this case, it is taken as 30° to the horizontal. The boss should reach along the sides of the pump body as far as possible, and, therefore, the lines that define its outline in the plan

Digitized by Google

should be tangent to the circle that represents the body. Draw the lines *g h* and *i j* at the required angle and tangent to the large circle in the plan. Draw the line *g j*, and if practice in projection drawing is desired, the student may project the outline to the elevation and work out the correct line of intersection in that view. This line of intersection is not required in the elevation in this case, since it is here possible to produce the pattern from the drawing in the plan. The student should note that although the axis of the cone of the boss is shown in its true length in both the plan and the elevation, yet it is only in the plan that the intersected surface—the body of the pump—is shown as on edge. Draw the line *h i*, considering it as representing a temporary base of the cone, and describe the dotted semicircle that appears in the plan of Fig. 53 as the half-full view of the base. This semicircle is then divided by spacing, as in former problems, and elements are represented extending to the vertex *O*. The intersections of these elements with the outline of the pump body are next projected to the true edge line and the development completed in the usual way. This problem is one of general utility in the trades, and its construction should be thoroughly understood in order that its application may be made as occasion requires.

---

PROBLEM 20.

**53. To develop the patterns for an open coal-hod body.**

EXPLANATION.—A perspective view of the coal hod is given in Fig. 54. This article, as well as many of those given in former problems, offers a wide range of proportions and styles to the discretion of the draftsman and furnishes ample opportunity for practice in various combinations. The hod shown in Fig. 54 is one of the kind known as "open" hods—that is, the hod has no covering over the funnel end. Coal hods are designated in the trade by numbers that have reference to the extreme length across the top, as indicated by the dotted line *A B* in Fig. 54.

Digitized by Google

The development in this problem is of an 18-inch hod, and the drawings are to a one-quarter scale, that is, 3 inches to 1 foot. The directions for the projection drawings are given in the following construction:

FIG. 54.

CONSTRUCTION.—A right plan and elevation are required in this case, and since the only dimension that is given is the extreme slant width, this must first be represented. The angle of inclination of this line is indicated in Fig. 55, and the line $A\,B$, 18 inches long, is therefore drawn at the given angle to the horizontal. By means of the 30° triangle, draw from the point $A$ the line $A\,C$ downwards and toward the right of the drawing, as shown in Fig. 55, making the line 13½ inches long. Draw the horizontal line $C\,D$ 8½ inches long, and, finally, a line connecting the points $D$ and $B$. The principal points of the elevation now being determined, the plan may next be constructed before the curves of the top are shown. Therefore, bisect the line $C\,D$ at the point $x$, and in a convenient place on the drawing below the elevation, draw a horizontal line of indefinite length that will serve as a center line for the plan; project the point $x$ to this line at $o$; also project the points $B$, $C$, and $D$ as shown at $b$, $c$, and $d$, respectively. With $o$ as a center and with $o\,d$ and $o\,b$ as the radii, describe the arcs shown, the inner curve being a full circle. From the point $c$ draw lines at an angle of 22½° to the horizontal and complete the triangle $A'\,c\,A'$ in the plan by projecting a line from the point $A$ of the elevation, as indicated in Fig. 55. Draw lines from the points $A'$ that will be tangent to the outer arc and project the point of tangency $f$ to the point $w$ on the line $A\,B$ of the elevation. The completion of the elevation may now be made, and since the line that

Digitized by Google

represents the upper base is usually given a double curve, it may be constructed by the aid of the compasses as follows:

From the point *A* as a center and with a radius equal to the distance *A w*, describe an arc of indefinite length; intersect this arc at *e* with an arc of the same radius drawn from the point *w* as a center; from *e* as center and with the same radius, describe the arc *A w*, as shown. In a similar manner, the arc *w B* is described from the center located at *e'* and with a radius equal to the perpendicular distance *w B*. The straight line *A w* should be lightly inked in on the drawing, since a bend is made along this line and the parts of the coal hod above the line are in a vertical position. In the construction of the pattern, the straight line *A w* alone is considered as bounding the surfaces of the coal-hod body, and no attention is paid to the curved flange until the development is laid off, as the student will perceive during the instructions that follow.

The projection drawings are now complete and the process of development may be at once started, but before any work is done the student should carefully consider the various portions of the solid thus represented. It will be seen that the triangular surface *A' c A'* in the front of the hod may be laid out by merely projecting its full view, but for the remaining portions triangulation alone will suffice. The manner of laying out the triangles also deserves much attention, since in this case an arrangement can be made that will result in an incorrect pattern; if, however, the triangles are placed in accordance with the general contour of the surfaces and with due regard to its form, a correct pattern is sure to result.

Let the upper half of the outline of the lower base in the plan—that is, the part of the outline above the horizontal center line—be divided by spacing into a convenient number of equal parts, in this case six, as indicated by the points *1*, *3*, *5*, *7*, and *9* in the plan of Fig. 55. Fix the point *2* on the upper base at the extremity of the tangent, and divide the curved portion of the outline of the upper base into five equal spaces, designated by the numerals

Digitized by Google

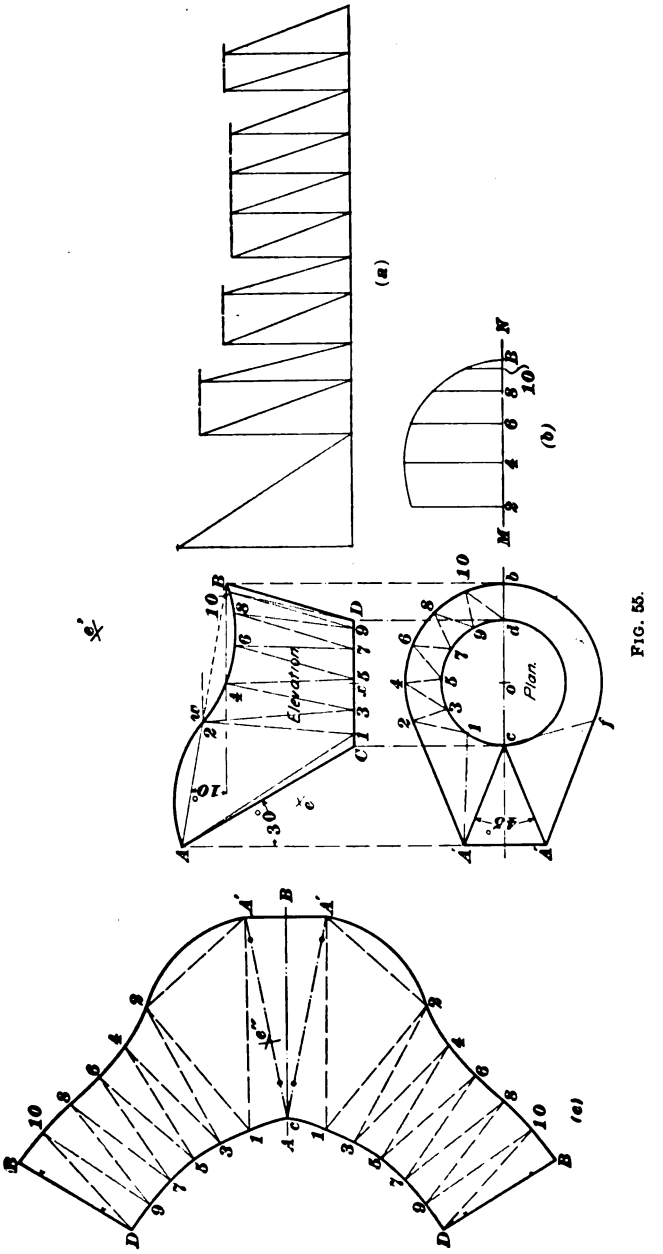


FIG. 55.

Digitized by Google

*4*, *6*, *8*, and *10* in Fig. 55. Now locate the triangles on the irregular surface of the coal hod by drawing *A' 1*, *1–2*, *2–3*, *3–4*, *4–5*, etc. It will thus be seen that a plane triangle of comparatively large size is included between the lines *A'1*, *A' 2*, and *1–2*, and that the surfaces of the triangles included between the remaining lines just drawn are slightly curved, although, by the arrangement just made, the curvature is such that a gradually bending effect will be produced when the pattern is formed as required by the drawings. In order that the student may see the effect produced by drawing a line directly between the points *c* and *2*, a line has been drawn in the lower half of the plan between the points *c* and *f*, the point *f* representing a position corresponding to that of *2* in the upper half of the plan. Note that a portion of the length of this line is shown within the circle of the lower base; also that if the triangles were laid off in this manner, a bend would be required along the line *c f*, which is not only unnecessary, but would tend to disfigure the appearance of the finished article. The arrangement shown in the upper portion of the plan is the correct one, and will serve as a guide when the student is called on to produce a similar development.

All the points noted in the plan are now to be projected in the regular way to the elevation, as shown in Fig. 55, and lines are to be drawn between successive points on both bases. Before the development can be made, however, the true lengths of the lines forming the sides of the triangles must be ascertained. A diagram of triangles is therefore constructed as shown at (*a*); since the method of determining these triangles has already been explained, further description is unnecessary. It will be seen, by comparing the plan with the elevation, that the true distances between the points *2*, *4*, *6*, etc. on the upper base are not shown in the plan, and, therefore, a development must be made for a portion of the curved top of the hod. The stretchout *M N* is accordingly laid off as shown and spaced in accordance with the width of the similarly numbered spaces in the elevation; edge lines are next drawn, and points thereon

Digitized by Google

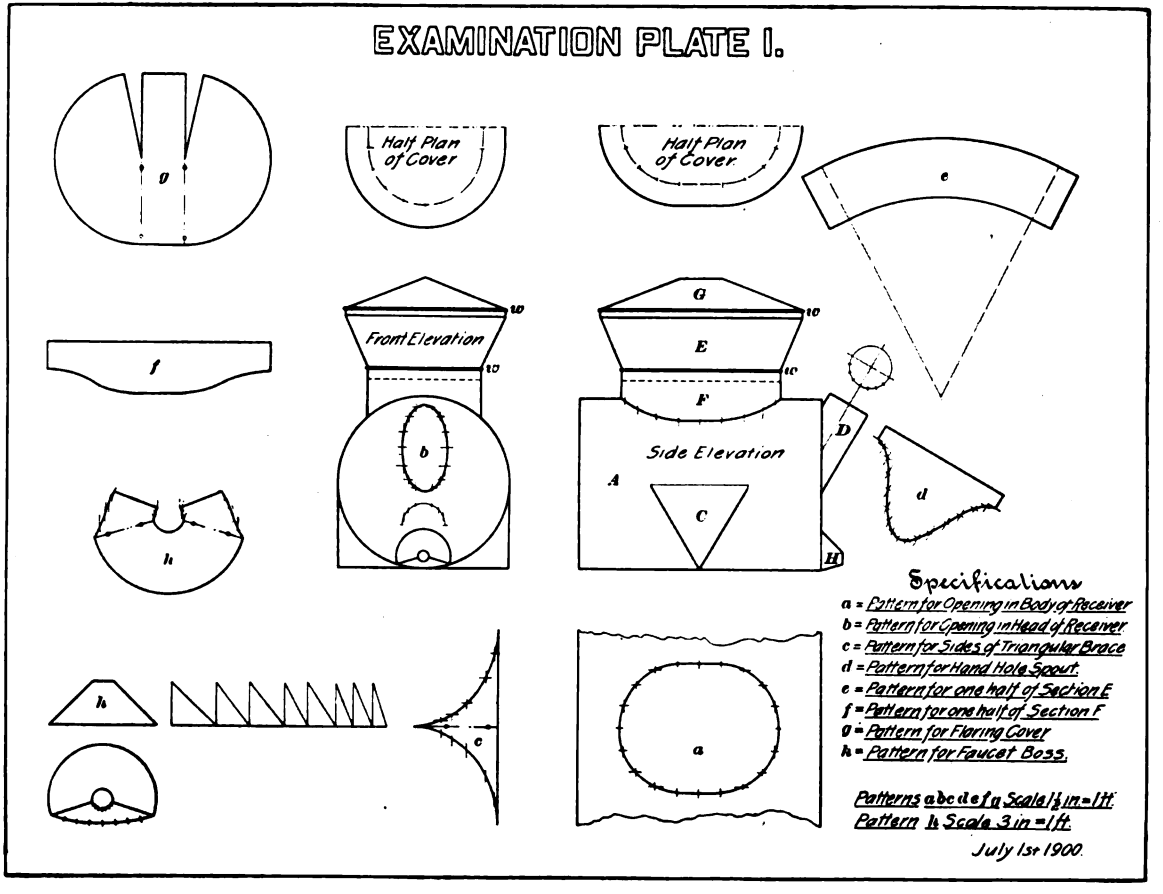


Digitized by Google

determined by means of developers drawn from the plan; through the points thus located is traced the curved outline shown in Fig. 55 (*b*), the distances for the pattern radii being taken from this outline as hereinafter shown.

Everything now being ready for the development of the pattern, a line of indefinite length may be drawn, as the line *A B* at (*c*); perpendicular to this line, draw the line *A' A'* and make it of the same length as the similarly lettered line in the plan. Next, set off the point *c*, its distance from the line *A' A'* being equal to the length of the line *A C* of the elevation; draw the two lines *A' c*, thus completing the triangle *A' c A'*; next, construct the triangle *c A' 1*, the distance *c 1* being taken directly from the plan and the length *A' 1* from the proper triangle at (*a*). The remaining triangles are constructed as shown in Fig. 55 and are similar to those of former problems.

It is necessary to add a portion to the pattern thus defined in order to provide for the upright flanges along the lines *A' 2*; this is done by the aid of the compasses, from a center located at *c''*, and with a radius equal to the true distance from *A'* to the point *2* as taken from the drawing at (*c*). The surface thus represented is not strictly in accordance with the projection drawing, but is close enough for all practical purposes and economizes work; such processes are allowable in cases where no lines of intersection are involved.

---

## SPECIFICATIONS FOR DRAWING EXAMINATION PLATE.

**54. General Instructions.** — The three examination plates required for *Practical Pattern Problems* are to be drawn by the student on paper of the same size as that used for the plates of preceding subjects of this Course, viz., 14″ × 18″. The Technical Supply Company's paper is recommended as having a good surface for this purpose,

Digitized by Google

although any white drawing paper of good quality may be used. As before, a border line is to be ruled around the sheet $\frac{1}{2}$ inch from the edge, thus making the size of the sheet on which the drawing is made $13'' \times 17''$. No construction lines needed for projections or developments are to be erased. These construction lines are not shown on the reduced copy of the plates; but should be shown on the examination plates sent to the Schools for correction. The drawings on these plates will possess an increased value to the student if they are inked in, although, as in the preceding plates of this Course, pencil drawings will be accepted from such students as do not desire to acquire proficiency in the matter of making finished working drawings.

**55. Description of Plate.**—This examination plate is to contain the necessary projection drawings of an oil filter whose description is given in the following article. In addition to the projections, the student is required to draw a suitable development for each of its parts and to make such an arrangement of the several views on the plate as to present a pleasing appearance. Each portion of the filter as shown in the projection drawings is to be indicated by a capital letter and the corresponding development of such portion is to be designated by a similar lower-case, or small, letter. In addition to this work, a brief recapitulation, or description, of the several patterns is to be given in a convenient portion of the drawing. This will afford the student desirable practice in the use of the lettering alphabet given in *Instrumental Drawing* and will serve to illustrate the manner in which working drawings may be rendered more intelligible to persons unacquainted with the processes of development. The title of the plate, Examination Plate I, is to be placed in the upper central portion of the drawing $\frac{3}{8}$ inch below the border line, and the block letter described in *Instrumental Drawing* should be used, as in the case of the drawing plates previously described. Before the work on the plate is undertaken, the student should make preliminary drawings on other paper, in order that he may

Digitized by Google

form an adequate idea of the size of the several constructions. The additional practice thus obtained will be of much assistance to the student, and he will then be better able to judge as to the best relative arrangement that can be effected. An outline perspective of the oil filter is given in Fig. 56. In this illustration, the dimensions of the several parts are clearly shown, and by its aid the student should have no difficulty in constructing the required projections. The developments, or patterns, are then to be laid off in the usual way. Suitable edges for such laps and locks as may be required are also to be indicated on the drawing.

**56. Particulars of Filter.** — In many establishments where drilling, threading, and tapping machines are used, or where automatic high-speed operations of a similar character are carried on, it is customary to allow oil to flow freely over the work. This oil is afterwards collected in a drain, or drip, pan, but since it contains dirt and small particles of metal, it must be filtered before being used again. For this purpose, a specially constructed filter is necessary, and several styles made by different manufacturers are now on the market. They all operate on the same general plan, that is, a cloth strainer is first used to remove the coarser and more solid particles. The oil is then passed through a layer of quartz sand, or other material, into the receiver, and is then in a condition suitable for use. The cloth strainer is attached to a metal rim that may be readily removed and the solid particles knocked off, while the receptacle containing the quartz is so constructed that the sand may be readily taken out and renewed.

In order that the sediment may be further separated, the drain cock from the receiver is attached a little above the bottom, and the accumulation of sediment that forms in the bottom of the tank is removed through a handhole at the front of the receiver. A specially designed filter that meets these requirements is shown in Fig. 56; it is seen to consist of a cylindrical receptacle $A$ whose dimensions are

Digitized by Google

given in the illustration. In order to afford stability, since the axis of the cylinder is in a horizontal position, a brace *C*, which may be described as an irregular frustum of an equal-sided triangular prism, is attached to each side of the cylinder, thus preventing any rolling motion; these braces are mitered into the curved sides of the cylinder and their

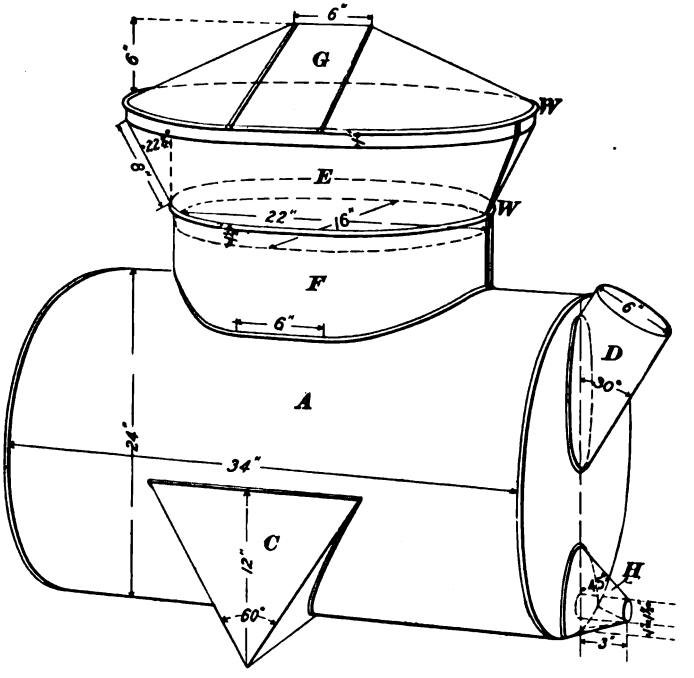


FIG. 56.

outer ends stopped by pieces of metal. The spout *D* on the front of the receiver is a cylinder 6 inches in diameter; the upper portion is cut off at right angles to its axis, and a large screw-cap forms a means of ready access to the inside of the tank.

The discharge cock is soldered to a tube 1½ inches in diameter and its lower edge is 1 inch above the bottom of the

Digitized by Google

tank; this tube projects 3 inches from the end of the tank and is strengthened by a boss *H*, whose upper sides make an angle of 45° with the tank head. It will be seen from the illustration that the lower edge of this boss coincides for a certain portion of its contact with the edge of the cylinder, and, therefore, may be described as a solid composed of a portion of a frustum of a cone and an irregular form that can be developed only by triangulation. The development of this boss affords an interesting opportunity for the student to display his knowledge of this method of constructing patterns.

The filter pan *E*, whose sides flare at an angle of 22½° with the vertical, measures at the base 16 inches wide by 22 inches in extreme length, its outline at the ends being defined by semicircles. For a distance of 1½ inches in its height, this pan has straight sides that are made small enough to set down in the part *F*; above that distance they flare on all sides at the given angle, and the pan is finished at the top by a straight-sided portion that contains the rim to which the cloth strainer is attached.

The edges indicated by *W* are wired with a ¼-inch rod, but since the patterns for the straight portions of this pan will be merely straight pieces, or strips, of metal, they may be omitted from the sheet, as may also the pattern for the perforated bottom. The pattern for the flaring body of this pan is to be laid out so that two similar pieces will form this part of the article. A pitched cover *G* in one piece completes the work that is required. If properly arranged, these drawings may easily be accommodated on a sheet of the given size. The projections should occupy a central position on the plate, and, together with the developments—with the exception of the pattern for the faucet boss, which is to be made to a scale of 3 inches to 1 foot—are to be drawn to a scale of 1½ inches to 1 foot. The patterns for the several parts of the article are to be indicated by letters, as already mentioned, and in the lower right-hand corner of the sheet a summary of the work may be added, as shown on the reduced copy of the plate.

Digitized by Google

The different patterns that are to be shown are:

(*a*) A pattern for opening in body of receiver.
(*b*) A pattern for opening in head of receiver.
(*c*) A pattern for sides of triangular brace.
(*d*) A pattern for handhole spout.
(*e*) A pattern for one-half of section *E*.
(*f*) A pattern for one-half of section *F*.
(*g*) A pattern for flaring cover.
(*h*) A pattern for faucet boss.

With the exception of the last item in the foregoing list, the patterns, as previously stated, are drawn to a scale of 1½ inches to 1 foot, but since the work required for the development of the pattern for the boss is too intricate to be

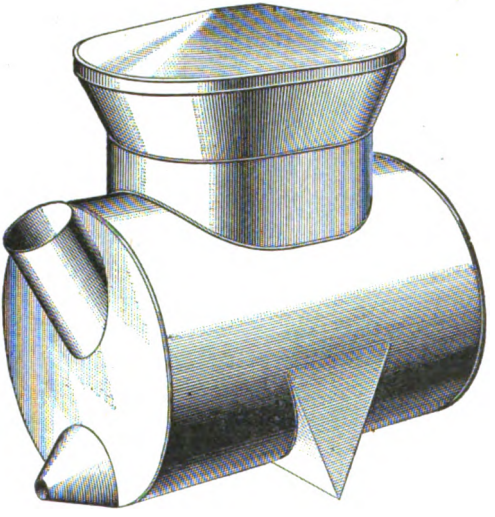

FIG. 57.

well shown in such a small drawing, it is necessary to reproduce a portion of the projection drawings and to develop this pattern on a scale twice the size of that adopted for the other portions.

A reduced perspective view of the completed filter is given in Fig. 57. Such fittings as the faucet, the screw

Digitized by Google

top for the handhole, and the handle for the cover have been omitted from the illustration in order that the actual work required of the maker may be better understood. In this illustration, the position of the filter is somewhat changed in order that the student may compare the two views given and thus arrive at a better understanding of its proportions. The student will also derive some benefit from an inspection of the reduced copy of the examination plate. The general arrangement of the different views is here shown, and while the operations are not clearly defined in the drawing, enough is outlined to enable the student to apply the necessary principles to his plate.



Digitized by Google

Digitized by Google

# PRACTICAL PATTERN PROBLEMS.

(PART 2.)

## INTRODUCTION TO PROBLEMS.

**1.** The problems in this section have been selected with a view to giving the student needed practice in the development of patterns relating to pipe and conveyor work. The different constructions have been collected during the course of a long experience with workshop practice, and, therefore, are of great value to the student. They should be carefully drawn in accordance with the text—merely to study them is not sufficient. The practice obtained by drawing them is nearly as efficient as can be obtained in the drafting room of a sheet-metal-working establishment under the guidance of a thoroughly competent and skilled patterncutter. Until the beginner has actually worked out problems relating to the daily situations of life, he lacks a certain consciousness of his ability to perform difficult operations that is always characteristic of the successful mechanic.

The plan of making paper models of the patterns that are developed is an excellent one, and if the student is in a position to make sheet-metal models of the different articles that are illustrated in this Course, he will find it a source of profitable training. Moreover, should any errors arise in the course of his work, they are sure to come to light when the model is made, and by carefully going over his work, he will be able to discover and rectify any blunders that



For notice of the copyright, see page immediately following the title page.

Digitized by Google

may be made. At this stage of the instruction, it is perhaps unnecessary to remind the student of the importance of accuracy, for he has already had ample evidence of the slight value of a development carelessly drawn.

Each problem should be carefully drawn by the student, but it is not required that the drawings should be sent to the Schools for correction unless the student meets with insurmountable difficulties, in which case assistance may be obtained in the usual way. After the completion of the foregoing work, the examination plate is undertaken in accordance with previous instructions and in the same manner prescribed for the plate in *Practical Pattern Problems*, Part 1.

## GROUP II: PATTERNS FOR PIPEWORK.

### PROBLEM 21.

**2. To find the miter line and to develop the patterns for elbows of any number of pieces.**

EXPLANATION.—The general method to be pursued when a development is required for a two-pieced elbow of any angle has already been shown in connection with a problem in *Development of Surfaces*. There is, however, a more convenient and ready way by means of which a pattern may be laid off for an elbow of any given angle or of any desired number of pieces. This method involves a comparatively small amount of work in projection drawing and is frequently accomplished directly on the sheet metal by the aid of the steel square and the dividers. This problem, therefore, is of general utility to the sheet-metal worker, and the student should carefully follow the instructions and memorize the construction.

SPECIFICATION.—Three elbows whose patterns are to be laid out are shown in Fig. 1 (*a*), (*b*), and (*c*). Both (*a*) and (*b*) are square elbows, or elbows of 90°—that is, lines drawn

Digitized by Google

perpendicular to the axes of the two end sections of each elbow form an angle of 90°—the elbow at (*c*) being one of 67½°. Further, (*a*) is a four-pieced, (*b*) a six-pieced, and (*c*) a five-pieced elbow.

The several pieces that compose an elbow are commonly termed *sections;* the end sections of an elbow may be made of any conveniently determined length. This length—called *length of throat*—may be set off at the pleasure of the draftsman or may be regulated by the requirements of any particular case, and in some instances may be determined by the sizes of sheets that are at hand. The same is true also in regard to the middle sections, and any length

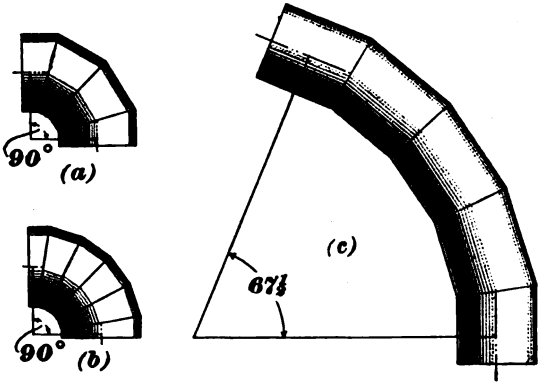


FIG. 1.

may be chosen that is consistent with the prevailing conditions. For the various classes of work, it is customary to adopt lengths that are widely different; thus, the styles shown at (*a*) and (*b*) are as short, or as "close," as they can be made—only sufficient length being allowed to provide for the two necessary rivets and the required edges that must be thrown off for seaming. Elbows of this form are commonly used in stovepipe work and in duct work where a blast is not used. The particular style shown at (*c*) is ordinarily used for turns in blowpipe work, for grain chutes and conveyors, and for work of a similar nature where it is desired to reduce the frictional resistance to the

Digitized by Google

lowest possible amount. While it would not affect the angle of the elbow if some of the middle sections in the same

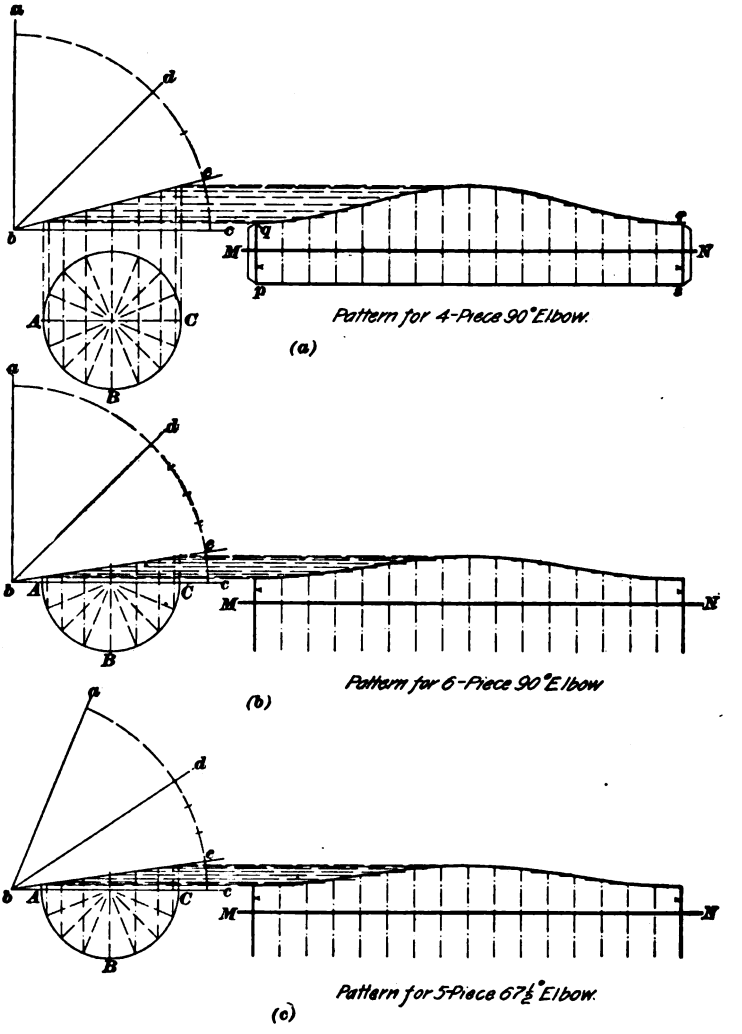


FIG. 2.

elbow were made longer than others, yet, for the sake of preserving a symmetrical appearance, such lengths are

Digitized by Google

usually made uniform. The diameter at the openings of these elbows may be taken as 6 inches and the drawings constructed to a scale of 3 inches equals 1 foot.

CONSTRUCTION.—The drawings shown in Fig. 2 (*a*), (*b*), and (*c*) contain all the preliminary work that is essential for the production of any plain elbow development; all unnecessary work has been omitted, and the constructions here shown are those in general use by practical cutters.

Attention is first directed to Fig. 2 (*a*), by means of which the pattern for the elbow shown at Fig. 1 (*a*) is developed. First describe a circle *A B C* that will represent a plan of one of the end sections; note that at (*b*) and (*c*) this operation is still further shortened—only a semicircle being described—for it is necessary to define but one-half of an outline that is capable of division into symmetrical halves. The outline of this circle (or semicircle) is next divided by spacing into a convenient number of equal arcs—sixteen being taken in this problem. Next, in the position shown at Fig. 2 (*a*), an angle *a b c* is constructed whose measurement will be the same as that of the desired elbow—in this case 90°. From *b* as a center and with any convenient radius, describe an arc, as shown, that shall intersect *a b* and *b c*; bisect the angle *a b c* by the line *b d* and then divide that portion of the arc included between the lines *b d* and *b c* into a number of spaces one *less* than the number of pieces, or sections, required in the elbow. That is, in the case of the drawing at Fig. 2 (*a*), where it is desired to produce the patterns for a four-pieced elbow, the arc is divided into *three* equal spaces; at (*b*), into *five* equal spaces; and at (*c*), into *four* equal spaces. From that point of division nearest the line *b c*—that is, the point *e*—draw a line to the vertex of the angle at *b*. The line *b e* may now be used precisely as though it were a regular line of intersection projected in the usual way, and the method is the same for elbows of any diameter. The development is next constructed by laying off the stretchout *M N*, as shown in Fig. 2 (*a*), by drawing projectors—which represent, in this case, assumed edges—from points on the outline of the circle to the line of intersection *b c*, and thence

Digitized by Google

drawing developers to the edge lines in the development in the usual manner. Through the points thus determined at the intersection of the developers with the edge lines in the development, the irregular curve of the pattern may be traced.

The manner of laying off the pattern for the outer and middle sections—that is, for the complete elbow—although very simple, is perhaps deserving of some attention. The irregular curve that is produced by the developments in Fig. 2 is the only one needed for the entire elbow, and the pattern may be cut out as indicated by the outline *p q r s* in the illustration, care being taken to make the lines *p q* and *r s* of the same length. A sheet of metal must be provided that is of sufficient length to provide for locks and edges, and, reversing the pattern as required, the sheet is marked as indicated in Fig. 3. The outer parallel lines of every section must be equal, in order that there may be no projecting corners when the metal is edged in the proper machines.

Elbow makers distinguish the various sections of an elbow by particular names; thus, the piece commonly used for the large end *a*, Fig. 3, is called the *butt*, and is chosen for the reason that when formed up, the joint, or seam, comes on the under, or throat, side of the elbow, and is therefore in the place least exposed to view. The section *d*, Fig. 3, is called the *point*, and is contracted, or "drawn in," to enter the large end of the pipe to which it is fitted—its seam being thus partially covered. The middle sections *b* and *c* are designated, respectively, No. 1 and No. 2 sections. In shops where four-pieced

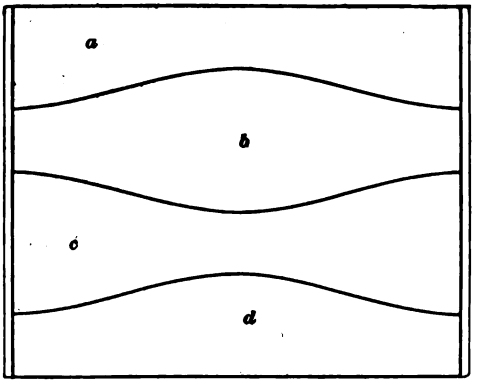


FIG. 3.

Digitized by Google

elbows are made by machinery, the stock is sorted after being cut, and elbows of the better grades are made of butts, points, and two No. 1 sections, thus avoiding seams in the back. A second grade, somewhat cheaper, is made in which the No. 2 sections are used. For general trade use, however, on account of the waste of stock, this distinction cannot be made, and it is customary to work up all the sections as they are cut and without particular regard to the appearance of the seams.

It is evident that an elbow of any desired number of pieces may be readily laid out by the method that has just been shown; but, since it is often desirable to produce elbow patterns without loss of time, what are known as *elbow charts* are frequently used. These consist merely of a diagram in which the angle of the line of intersection is indicated, and the patterncutter has only to copy the angle on his drawing

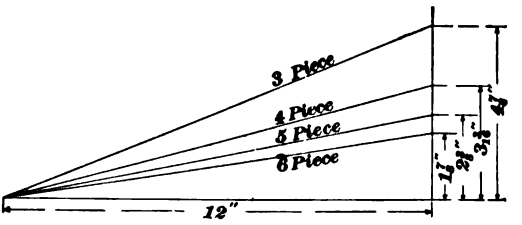


FIG. 4.

and proceed at once with the development. In place of using a protractor to measure these angles, they are constructed as right-angled triangles whose bases are taken of a given length and whose heights, or altitudes, vary in accordance with the specified angle. Such a chart is shown in Fig. 4, and if desired for shop use, may be reproduced by the student on a piece of thick cardboard.

Reference to Fig. 2 will enable the student to understand that the processes shown at (*b*) and (*c*) are similar in every way to that shown at (*a*). It should be particularly observed that in the drawing at (*c*), where the desired development is for an elbow of $67\frac{1}{2}°$, the angle *a b c* is laid out at that

Digitized by Google

number of degrees. It is then bisected in the usual manner, and the miter line, or line of intersection, is determined in accordance with instructions that have been given for the elbow at (*a*).

---

PROBLEM 22.

**3. To draw the elevations of elbows having any number of sections.**

EXPLANATION.—It has been shown in the preceding problem that when the sheet-metal worker wishes to lay out a single plain elbow—one whose seams are not intersected in any way by adjoining pipes or other solids—it is not essential that he should draw a complete elevation. In many

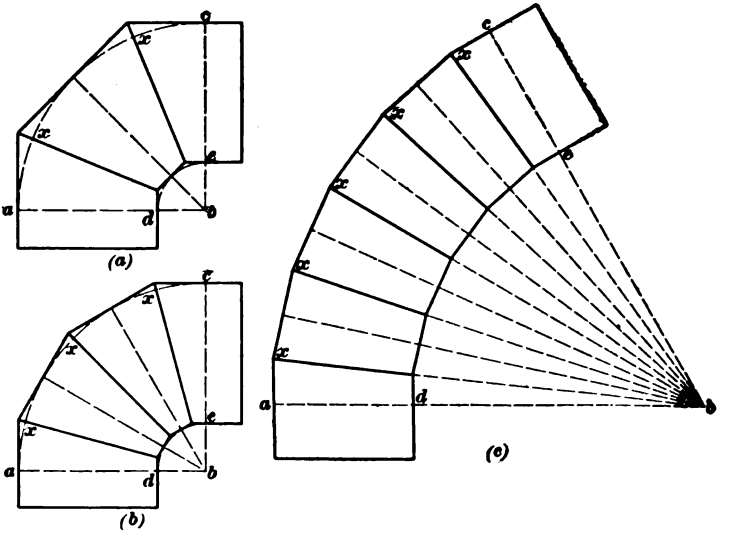


FIG. 5.

instances, however, especially where intricate intersections are to be worked out, the entire elevation should be projected, and in the following problems may be found particular cases where the drawing of the full elevation is all important. The present problem is introduced in order

Digitized by Google

that the student may be in possession of the best means of producing such elevations. No development of the surfaces of these elbows is to be drawn in this case, for such work would be merely a repetition of that given in Problem 21.

It is required to draw elevations of three-, four-, and six-pieced elbows, and in order that the student may derive the greatest possible benefit from this exercise, the first two drawings may represent elbows of 90°, and the third drawing an elbow of 60°. Their diameters may be taken in each case as 6 inches and the drawings made to a scale of 3 inches to the foot.

CONSTRUCTION.—Draw first the angles *a b c*, Fig. 5 (*a*), (*b*), and (*c*), and make them equal to those of the required elbows; that is, 90° at (*a*) and (*b*) and 60° at (*c*). Next, on the line *a b* lay off a distance from *b* to *d* equivalent to the length of the radius desired for the inner curve of the elbow. This distance varies with the class of work for which the elbows are intended and with the number of sections in the elbow; for, as will be seen later, this distance fixes the length of the middle sections. It should not, therefore, be laid off without attention to these details. In the drawings at (*a*) and (*b*), the distance *d b* may be taken as 2 inches and in the drawing at (*c*) as 12 inches; after the point *d* has been located, describe, from *b* as a center with *d b* as a radius, an arc intersecting the lines *a b* and *b c*, as shown in Fig. 5. Make *d a* equal 6 inches, the diameter of the elbows, and, with *b a* as a radius, describe arcs concentric to those first drawn. The arcs *a c*, in Fig. 5, are next to be divided into equal spaces one less in number than the pieces required in the elbow; that is, two spaces at (*a*), three at (*b*), and five at (*c*). Each of these spaces is bisected in turn, and the joint lines, or the lines of intersection of the elbows, are indicated on lines drawn from the points *x* to the vertex *b*. The elevations are completed by representing the outlines of the different sections of the elbows by lines drawn tangent to the arcs *a c* and *d c* through the points that were located by the first spacing. The end sections of these elbows may have any convenient length

Digitized by Google

of throat, but it will be seen from Fig. 5 that the length of the middle sections as shown in each elevation cannot be changed when once the radius *d b* has been fixed.

---

PROBLEM 23.

**4. To develop the patterns for elbows in pipes of irregular sectional outline.**

EXPLANATION.—A problem in producing the patterns for stack elbows is here introduced in order to show the student that the principles adapted to the development of elbow patterns in round pipe are applicable also to elbows for pipes of irregular sectional outlines. In many localities, stacks for hot-air heating are made in the form shown in the plans of Fig. 7; that is, their sectional outlines are represented by a rectangular figure having semicircular ends. A perspective view of two elbows for pipes of this sort is

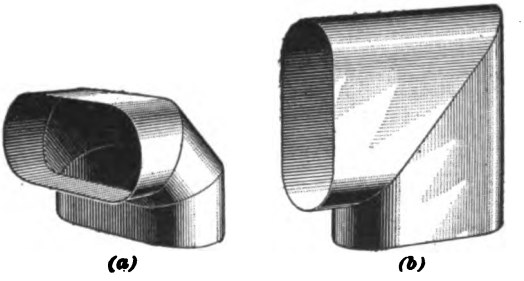


FIG. 6.

shown in Fig. 6. The drawing at (*a*) represents a three-pieced elbow such as is commonly used in making turns from a vertical stack to a horizontal line of pipe; the elbow shown at (*b*) is, by trade workers, usually termed an *edgewise*, or *flatwise*, elbow. Its use is obvious. Elbows of this sort are very generally used by furnace workers, the bend at (*a*) commonly being made in three pieces, and that at (*b*) in two pieces. These drawings are to be made to a scale of 3 inches to the foot, and the extreme dimensions of the sectional outline may be taken as $4'' \times 8''$.

Digitized by Google

CONSTRUCTION.—The miter lines for these elbows are to be found by the method used in Problem 21. In this case, it is necessary to draw a plan that will show at least one-half of the full outline of the sectional view. The plans and elevations may be constructed substantially as they are shown in Fig. 7; next, one-half of the curved outline is divided by spacing into a convenient number of equal parts,

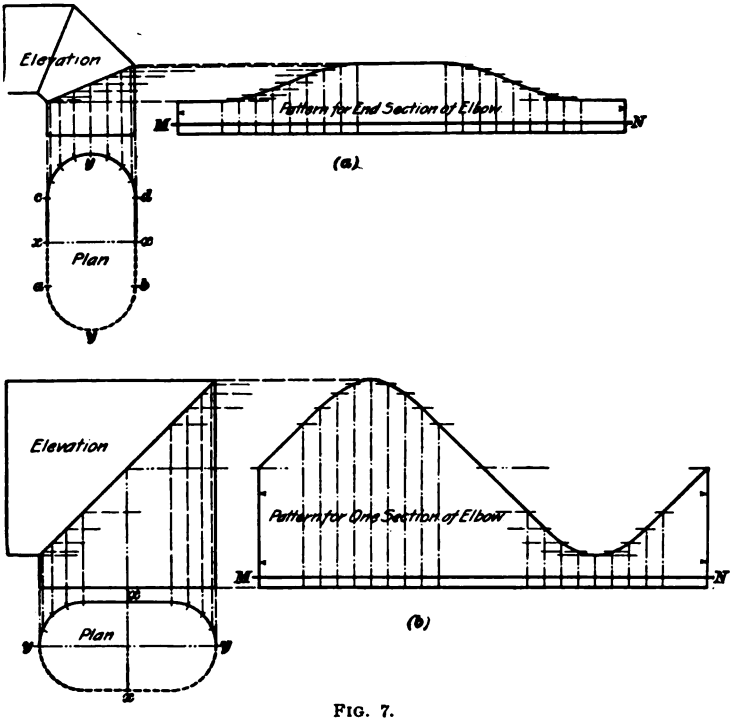


FIG. 7.

as in the case of elbows for round pipe. The stretchout $M\,N$ is then laid off in its proper position and edge lines erected in the usual manner. The completion of the development is made in a way precisely similar to that shown in former problems, and needs no further description.

It will be seen from Fig. 7 that the stretchout has been laid off in such a manner that the seams of the different sections will come at the points $x$, this being generally

Digitized by Google

regarded as the best place for the joints. In many shops, however, the seams are preferably made at the points *y*. If it is desired that the position of the seam should be changed in any way from that shown in Fig. 7, it may be accomplished very readily by starting the stretchout from the required point in place of from the points *x* as here shown.

CAPACITY.—It is doubtful whether less attention is ever paid to the capacity of an article made in the tin shop than in the case of stacks for hot-air heating, or whether there is an instance where a more important matter is neglected. An examination of work that has been installed by the average heating contractor will convince almost any one that little or no care has been expended on this subject. In order that these problems may be intelligently studied, the student should be informed as to the usual practice of heating engineers in the matter of the proportion that should be maintained between the capacities of the upright stack and that of the horizontal feeder. This subject is not strictly within the province of this Course, and is, moreover, of such a nature as to require that the different conditions should be considered; for example, the proportions that would answer in the case of the blast system of heating are not the same as are used where the ordinary hot-air furnace is used as a generator. In the case of the hot-air furnace, it is usually considered the best practice to construct the upright stacks so that they will have a sectional area equal to two-thirds that of the feeder. In too many cases a stack containing only one-third or one-quarter of the sectional area of the feeder is expected to warm an exposed room properly. And the blame for the inefficient heating apparatus is improperly placed on the furnace, when the real fault lies in pipes wrongly planned.

In order that the student may be in a position to carry out such ideas as are suitable for the erection of a properly installed heating plant, he should be expert in calculating the areas of the air flues and the velocities of their currents. The areas of pipes circular in sectional outline may be taken directly from the table of Areas given in *Arithmetic;*

Digitized by Google

but in the case of irregularly shaped stacks, as in this problem, it is necessary to compute the areas in a proper manner. The area of the stack in this case may be found by adding the area of the parallelogram *a b c d* at (*a*) to that of the two semicircles at the ends of the figure; since the areas of the two semicircles may be taken as that of one complete circle, its area may be found in the table of Areas.

| | |
|---|---|
| Area of 4-inch circle . . . | 12.57 square inches. |
| Area of parallelogram 4″ × 4″ | 16.00 square inches. |
| Total area of stack . . . | 28.57 square inches. |

Since the area of a round pipe 7 inches in diameter is 38.48 square inches, the stack illustrated in this problem may very properly be used in connection with a feeder 7 inches in diameter. Since there are many cases where different conditions must be considered, rules for the proportions required in similar cases may best be taken from the various books on heating and ventilation. This problem, however, well exemplifies the application of the principles of mensuration.

---

PROBLEM 24.

**5. To develop the patterns for a conic elbow.**

SPECIFICATION.—The conditions that are illustrated in perspective in Fig. 8 are not infrequently encountered in blowpipe work by the sheet-metal worker. The reducing, or conic, elbow there shown is often used to complete a turn between pipes of different diameters. In this problem, it will be assumed that the larger pipe is 12 inches in diameter and the smaller 6 inches in diameter. Their

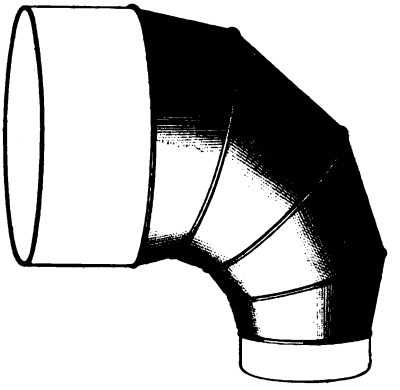

FIG. 8.

Digitized by Google

position is such that the axes of the two pipes make an angle of 90°—that is, a right angle—and the connection piece, or conic elbow, in this case is to be made in four pieces. The drawings are to be made to a scale of 3 inches to the foot.

CONSTRUCTION.—The solution of this problem depends for its result on the principle that the miter lines laid down for the production of elbows in cylindrical pipes will also hold

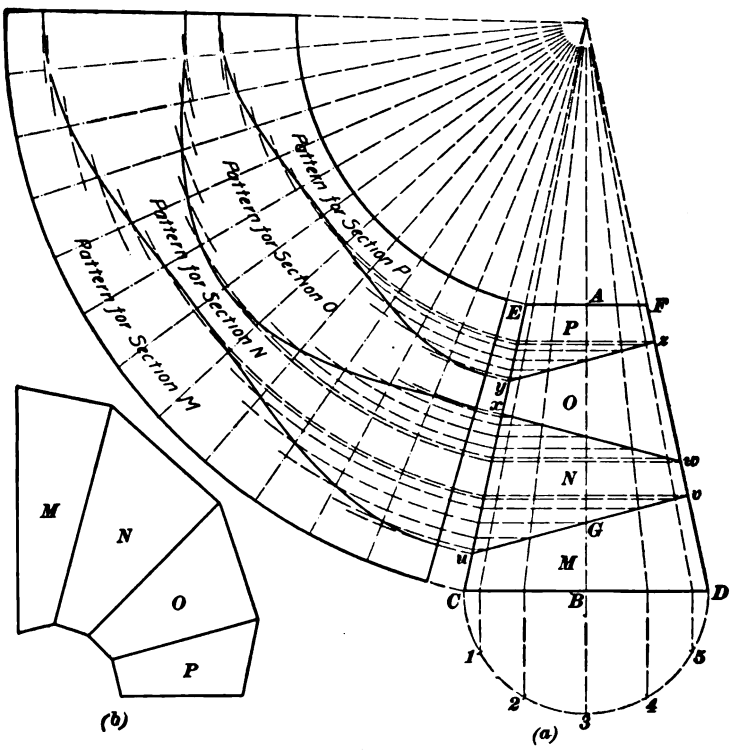


FIG. 9.

good for the development of the frustum of the cone. This is found to be the case *provided the miter lines are placed in the same relation to the axis of the frustum, or of the cone,*

Digitized by Google

*as they were to the axis of the cylinder.* The same rules that were given in Problem 21 for finding these lines may be used in this case, and the angles may accordingly be taken directly from the drawings for that problem.

The first step, however, consists in laying off an elevation of such a frustum as will contain sufficient material for the number of pieces required in the elbow; this is a matter for experiment, and it will be seen that such features as length of throat, number of pieces required in the elbow, and the lengths of the separate pieces must be duly considered. In the conditions that obtain in this problem, a height of 14 inches may conveniently be taken for the frustum; this distance is accordingly laid off on the line *O 3*, Fig. 9, from *A* to *B*. Through *B* and perpendicular to *A B*, draw *C D* 12 inches long; and through *A* draw *E F* 6 inches long; then draw *C E* and *D F*, producing them until they meet in the point *O*.

A half plan of the base of the frustum is next drawn, as indicated by the semicircle *C 3 D*; this is then divided, by spacing in the usual manner, into a convenient number of equal parts, and from the points thus located, the elements of the full cone are then projected to the elevation. The next step is to represent the miter lines, or the lines of intersection of the elbow. As previously stated, these lines must be at the same angle to the axis of the cone as they were to the axis of the cylinder in Problem 21—that is, the angle *O G v*, Fig. 9, must be equal to the angle *a b c*, Fig. 2 (*a*). The way in which this result may be most readily accomplished is to cut a cardboard triangle along *c b c*, Fig. 2 (*a*), and to use this triangle in connection with the T square in the same manner as the 45° or the 60° triangle is used. Having constructed one of these triangles, the distance *C u* is first laid off as a convenient length for the throat of the end section; the line *u v* is then drawn by the aid of the cardboard triangle and the distance *v w* laid off for the length of the second section of the elbow. The triangle is next reversed and the line *w x* drawn; the distance *x y* is made the same length as the distance *v w* and the line *y z*



Digitized by Google

drawn after again reversing the triangle. It will now be seen that the frustum should be so planned in regard to height that the distance $z\ F$ will be equal in length to the distance $C\ u$, in order that the two end sections of the elbow may present a symmetrical appearance. The four sections required for the elbow are designated in Fig. 9 (*a*) by the letters *M*, *N*, *O*, and *P*, and in Fig. 9 (*b*) a drawing is shown in which these sections are reversed. That each section in the drawing at (*b*) corresponds with the similarly lettered section in the drawing in Fig. 9 (*a*) may be determined by measurement. The sections, therefore, when fitted together to form the elbow are to be reversed in the order shown in the illustration. The development of the patterns for the sections of this frustum is accomplished in the usual way, and is well shown in the development in Fig. 9 (*a*). Since patterns of this sort have already been described in the text of preceding problems, no further instruction in that particular is necessary.

When these patterns are cut out of metal, as in the production of such an elbow, it is usual to allow edges on the side nearest the apex of the cone. It will be seen, therefore, that such patterns must be cut from separate pieces of metal (or from the same piece, if the pattern for each section is moved the width of the allowance), and that two shear cuts are required in the case of each line miter in the elbow. To provide for side laps or locks, the usual amounts are, of course, allowed at the ends of the patterns.

---

### PROBLEM 25.

**6. To develop the patterns for an irregular intersection of an elbow with a straight pipe.**

SPECIFICATION. — Fig. 10 is a perspective view of the arrangement of pipework that forms the subject of this problem. In many cases of blowpiping it is necessary to

Digitized by Google

connect two pipes of different diameters whose axes lie at right angles to each other. An ordinary T joint would not suffice, for the reason that it is important to secure an easy flow of air through the pipes and to reduce the frictional resistance to the lowest possible amount. The fittings that best accomplish this result are shown in Fig. 10, and are subject to many variations to suit the requirements of different situations for which the patterncutter must provide for. The larger pipe in this case is assumed to be 12 inches in diameter, and it is necessary to introduce a pipe 10 inches in diameter by means of a five-pieced elbow whose inner sections will be tangent to a circle of 14 inches radius. The axes of the two pipes, as previously stated, are at an angle of 90° to each other. These drawings are to be made to a scale of 1½ inches equals 1 foot. The construction should be very closely followed, for by slight modification, the method herein used may be suited to a variety of conditions.

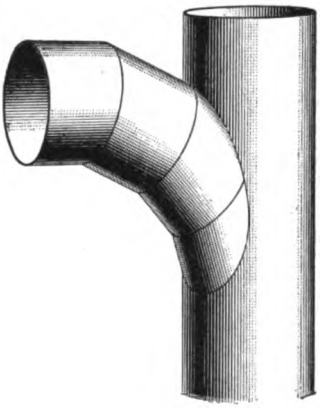

FIG. 10.

CONSTRUCTION.—The first operation consists in drawing an elevation of the elbow that will meet the requirements of the foregoing specification. Since this process has been fully described in Problem 22, these instructions need not be repeated here. It is necessary to outline completely all the lines of a full elbow, although only a portion of those lines are to appear in the completed drawing of the connection. Any horizontal line, as $o\,x$, Fig. 11, may first be laid off, and the elbow construction produced from $o$ as a center by the method described, the distance $o\,x$ being made equal to the length of radius stated in the specification; i. e., 14 inches. After the elevation of the elbow has been drawn, an elevation of a portion of the straight pipe is to be placed as represented

Digitized by Google

by *p q r s*, Fig. 11, and a circle described in the plan to indicate the outline of a sectional view of that pipe. The different sections of the elbow have been designated in the drawing in Fig. 11—commencing with the lower section—

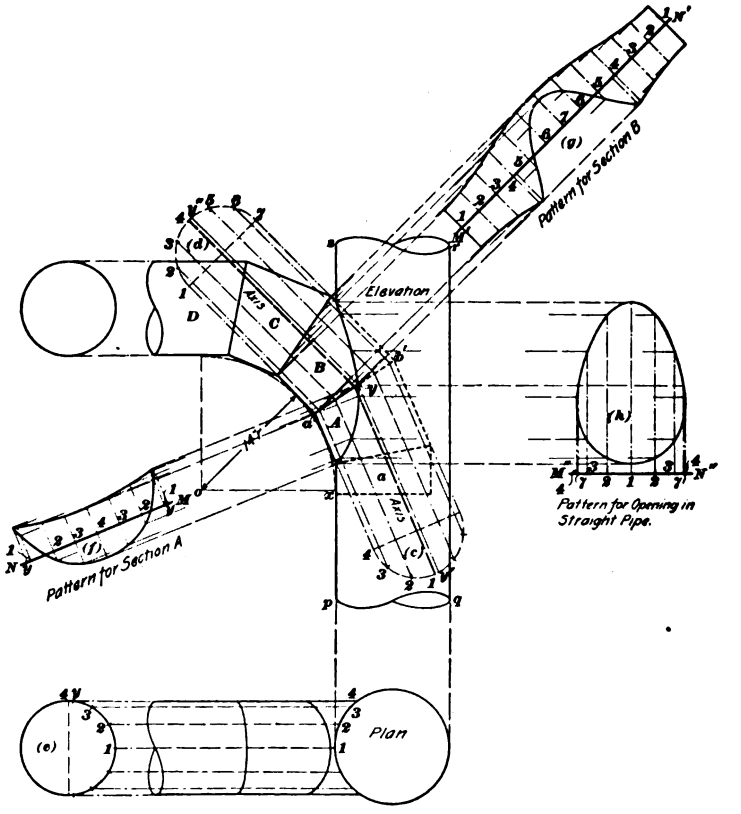


FIG. 11.

as *a*, *A*, *B*, *C*, and *D*. It will be seen, if the drawings are carefully studied at this point, that the section *a* will form no part of the completed connection; that but a small portion of the section *A*, a certain amount of the surface of section *B*, and the entire sections *C* and *D* will be required.

Digitized by Google

Since only a portion of the sections *A* and *B* will appear in the completed patterns, it is necessary to produce their lines of intersection in the projection drawing; this necessitates the construction of temporary end views of the different sections of the elbow and the representation of assumed edges on the surfaces of the sections shown in the elevation. Draw first, lines that will represent the axes of the different sections of the elbow at *A* and *B*, producing the axis of the section *B* indefinitely toward the upper portion of the drawing, and the axis for the section *A* toward the lower edge of the drawing. At (*c*) and (*d*), draw half-full sectional views, and divide each curved outline into the same number of similar equal spaces—afterwards producing the lines that represent the assumed edges in the manner shown in Fig. 11. The next step is to represent a full sectional view in the plan and in the position shown at (*e*); this latter view is then divided by spacing in the same way, and from the points thus located, horizontal lines are to be drawn toward the right until they intersect the outline of the larger pipe in the plan. From the points of intersection in the plan on the outline of the larger pipe, projectors are carried to the elevation, and through the points at the intersections of these projectors with corresponding projectors previously drawn from the views at (*c*) and (*d*), may be traced the correct lines of intersection that represent the division between the larger pipe and the sections *A* and *B* of the elbow. It will be observed that this irregular curve crosses the line *a' b'*—the line of intersection between the sections *A* and *B*—at the point *y*. For reasons that will become apparent later, it is necessary to project this point *y* to the views at (*c*) and (*d*), as shown at *y'* and *y''*.

The patterns for the different sections may now be laid off, and, accordingly, the stretchouts *M N* and *M' N'* may be laid off and developed at right angles to their respective sections of the elbow. In developing the stretchout *M N*, it will be seen that it is necessary to start from the point *y'* at (*c*), and that the point *4* at (*c*) represents the position of the central and longest edge

Digitized by Google

line of the pattern. The completion of the development for this section, and also for the section *B*, is in line with previous developments, and needs no further explanation. It will be seen that the upper outline of the pattern at (*g*) is a curve that will answer for the sections of the elbow at *C* and *D*. The pattern for the opening in the straight pipe is laid off at (*h*), the stretchout, of course, being taken from the plan. If it is desired to secure great accuracy in this development, the position of the point *y* may be located on the view at (*e*) and be further noted on the stretchout at *M'' N''*. It is the usual practice to determine the position of such intermediate points on the drawing and to designate them on the several patterns in order that the different pieces of the connection may be more easily fitted together.

Many variations of this problem are liable to occur in the course of the experience of the patterncutter. For example, a case may arise where the elbow is required to be fitted to the straight pipe in such manner that the axes of the different connections do not lie in the same plane; in such a situation, it is merely necessary to move the view at (*e*) in a vertical direction—either up or down on the drawing. The work then becomes more complicated, for the reason that a greater number of points must be determined; otherwise, the same principles are used as for the solution of this problem. Again, the specifications may be such that the elbow is at an angle other than a right angle; this situation is of frequent occurrence, and the student will readily see that in such cases it is merely necessary to draw the elbow at the given angle and in accordance with the instructions previously given in Problem 22. Such fittings as have been shown in this problem are frequently encountered in blast-pipe work and in the erection of the fittings for cotton gins and presses, shavings blasts, and dust blasts, and in many other cases that might be mentioned. It would be well, therefore, if the student were to pay especial attention to this problem, and, as far as possible, endeavor to memorize its construction.

Digitized by Google

PROBLEM 26.

**7. To develop the patterns for a three-way reduction elbow.**

SPECIFICATION.—The conditions that are covered by this problem are of frequent occurrence. In many cases, it is desired to take, from a single line of pipe, two smaller branches that shall run in different directions. A perspective view of the situation is shown in Fig. 12. The diameter of the large pipe is 20 inches and of each of the branches, 12 inches; each branch is made in the form of a six-pieced elbow, the inner sides of whose sections are tangent to a circle 16 inches in diameter—that is, the "throat radius" is 16 inches. The perspective drawing shows that a transition piece will be required to complete the connection between the large pipe and the sections *A* of the elbow; further, that the arrangement of the fitting is such that the sections marked *A* intersect each other for a certain distance. The drawings are to be made to a scale of $1\frac{1}{2}$ inches to the foot, and in the construction of the elevation it may be assumed that the lines that are to represent the lateral sides of the transition piece will be vertical and parallel.

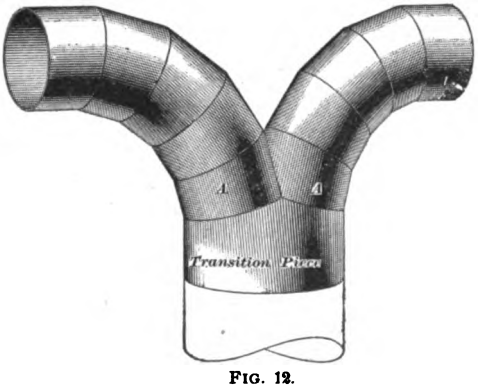

FIG. 12.

CONSTRUCTION.—As in the preceding problem, the first step is to construct the proper elevations of the two elbows in correct position; after the elevation of one of these elbows has been drawn, as in Fig. 13, the horizontal line $a\,a'$ is produced and its length made equal to the length of the diameter of the large pipe, since in accordance with the specifications, the lateral outlines of the transition piece are

Digitized by Google

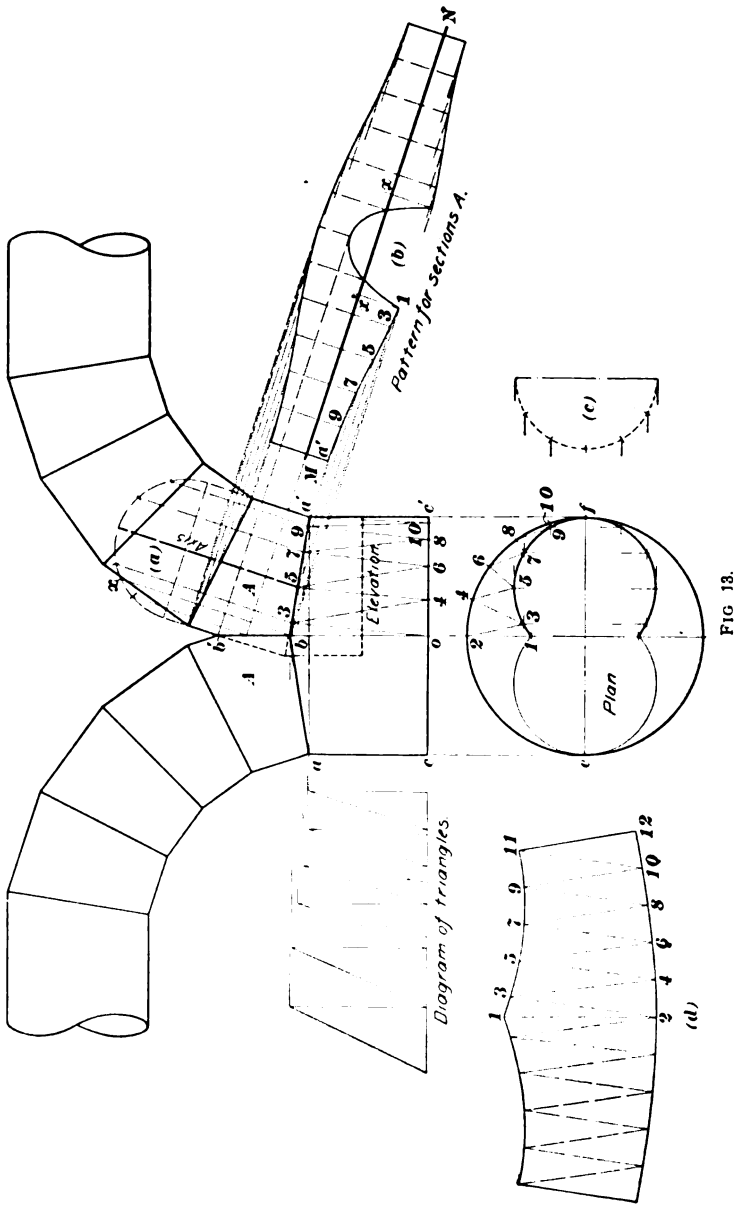


FIG 13.

Digitized by Google

to be represented by vertical lines in the elevation. The elevation of the other elbow when constructed will overlap that of the first elbow. It is already known, however, by *Practical Projection*, that the line of intersection of two cylinders and, therefore, the line of intersection of these two elbow sections will be represented by a line bisecting their outlines, and the line $b\,b'$ is accordingly drawn as shown in Fig. 13.

From the points $a$ and $a'$, vertical lines may be drawn to the points $c$ and $c'$; there being no specified length for the line $a\,c$, it may have any convenient length—say 10 inches—that will serve to give a proportionate appearance to the fitting. The line $c\,c'$ is then drawn and the elevation is complete. The plan may now be partially outlined—a circle 20 inches in diameter being described in the position shown.

It will now be seen that if the pattern for section $A$ is developed, the patterns for the entire elbow may be derived therefrom. Accordingly, the axis of this section is drawn and conveniently extended toward the upper portion of the drawing; next, at $(a)$ is constructed the semicircular half-full view of the cross-section of the elbow; this outline is then divided into equal spaces, and from the points thus determined, edge lines are drawn across the elevation of the section. The development of the stretchout $M\,N$ for the pattern of section $A$ is then made in the usual manner, and the point $b$ is noted at $x$ in the outline at $(a)$ and afterwards at $x'$ on the stretchout in a way that may be readily understood from an inspection of Fig. 13. The pattern thus laid off will serve equally well for either section designated by the letter $A$, and its upper outline will also answer for the pattern of the remaining sections of the elbows.

The patterns for this connection are now complete with the exception of that for the transition piece. From Fig. 13, it will be seen that the lower base of this piece has for its outline a circle, and that its upper base on the lines $a\,b$ and $b\,a'$ is defined by the same outlines that represent the lower ends of the elbow sections. The pattern for this piece, therefore, can be produced only by the method of

Digitized by Google

triangulation, and since a further examination of the drawing leads to the conclusion that the line *b o* divides the figure into symmetrical halves, it is seen that if a development of either side is made, the pattern may be completed by duplicating the resulting figure. It is seen also that the circle in the plan represents a full view of the lower base, and that from the lower outline of the pattern at (*b*), the true distance around the upper base may be measured. It remains, then, only to define the temporary triangles on the surface of the transition piece and to find the true lengths of their remaining sides. The first step, therefore, is to represent the section of the upper base in the plan; that is, the section on the line *b a'* must be projected to its proper place in the plan. Accordingly, the half-full view of the section of the elbow is described as shown at (*c*), spaced off similarly to the section at (*a*); through the points of intersection in the plan of projectors drawn from (*c*) with those drawn from points on the line *b a'*, the curve that represents a foreshortened view of the upper base may be traced as shown.

Next, the outline of the lower base of the transition piece in the plan is divided into the same number of equal spaces as are found on the outline of the upper base. Here it may be noted that the figure may be further divided into symmetrical halves, for it is seen that a horizontal line drawn through the center of the large circle in the plan will accomplish this purpose. In order to avoid confusion of lines and to lessen the work of development, the line *c f* should be drawn as shown in Fig. 13. For convenience of development, the points on the upper base of the transition piece in the plan are now indicated by the odd numbers *1*, *3*, *5*, etc., and the points on the lower base by the even numbers *2*, *4*, *6*, etc. The triangles may now be indicated in the plan by drawing lines between successive points on the upper and lower bases, as *2–3*, *3–4*, *4–5*, etc., and afterwards projecting these lines to the elevation; their true lengths are found in the customary manner, as shown by the diagram of triangles to the left of the elevation.

Digitized by Google

The necessary preparation having been accomplished, the work of laying out the pattern may now begin. As stated elsewhere, the first line of a pattern like this should be, if possible, the longest that is readily obtainable; in this case, the line *1–2*, as taken in its true length from the diagram of triangles, may be set off in any convenient place, as at (*d*), and the triangle *1–2–3* constructed in the usual manner. This being similar to preceding developments, it is necessary merely to note that the true radii for the arcs of the upper bases, as *1–3*, *3–5*, etc., are taken from the outline of the elbow section development at (*b*), the distances being there shown in their true length. Since similar positions in the different views of this problem are designated by corresponding letters and figures, the method of construction is apparent.

---

PROBLEM 27.

**8. To develop the pattern for a four-way branch Y.**

EXPLANATION.—There are many cases that arise in the course of the blowpipe fitter's experience where it is desired to take from a leader, or main pipe, a number of branches, each of which shall run in a different direction. Probably no two pattern draftsmen would design the fitting that is suited to these requirements in exactly the same manner; in fact, there are so many varying conditions that must be taken into consideration in work of this class that it is exceedingly difficult, if not impossible, to indicate any one fitting as being best suited to all situations that

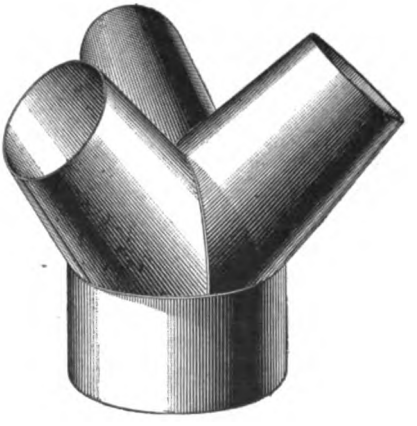

FIG. 14.

Digitized by Google

are liable to arise. The feature of prime importance, and, therefore, entitled to first consideration, is that the fitting shall be so constructed as to provide an easy flow for the contents of the pipe. In all work of this class, no pains should be spared to make all bends easy and gradual, and, further, the fittings and connections should be so constructed that the work may be readily put together—even by inexperienced workmen. The fitting shown in perspective in Fig. 14 is a form that is generally recognized by sheet-metal workers as well adapted to the conditions of this problem. It especially commends itself for this purpose for the reason that by slight changes in

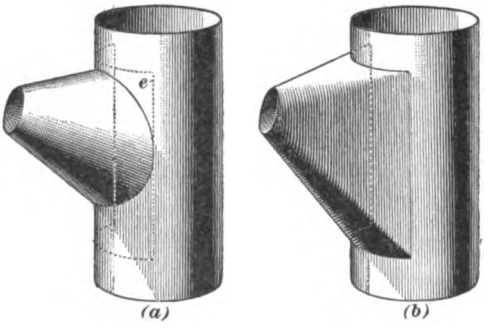


FIG. 15.

the construction of the drawing it may be made to suit a variety of purposes. It will be seen during the construction of the problem that the draftsman occasionally adopts the unusual plan of determining the miter line, or line of intersection of the different portions of the fitting, by means of an arbitrarily drawn outline. When this course is followed, however, the other portions of the drawing must be changed to conform with the changes thus made; in other words, if the miter line of a compound solid be arbitrarily drawn—that is, drawn without particular reference to the regular methods and processes that have heretofore been given for the finding of such lines—it is evident that suitable modifications must be made in the surfaces

Digitized by Google

affected by this change of method. In order that the student may comprehend exactly what is meant by the foregoing remarks, his attention is directed to a study of the conditions represented in Fig. 15. The perspective drawing at (*a*) represents an intersection of a frustum of a cone with a cylinder; the drawings necessary for the production of the patterns of this combination would be constructed in the regular way—that is, the projection would first be drawn and the line of intersection produced by means of processes that have been previously introduced—and the development of the pattern for the two pieces would then follow in the usual course. But suppose that for some reason it were desired to vary this mode of procedure and to use a different line of intersection; thus, suppose it were necessary to retain the circular-shaped end to the frustum, but to have the surface of the intersecting solid meet the cylinder along the dotted line *e* at (*a*). It will be clearly seen that this result could be accomplished, but the pattern for the surface of the intersecting solid could no longer be produced by the method adapted to the development of radial solids—the method by triangulation would be required, since the intersecting solid would be changed from a regular conic frustum to an irregular form having but slight resemblance to its former self, as may be seen from the figure at (*b*). While such miter lines, or lines of intersection, have been spoken of as being arbitrarily drawn, it is to be remarked that a due consideration for the resulting form must be observed by the draftsman. There are probably few cases where the imagination of the draftsman will serve him in better stead than in cases such as the present problem presents, for it is all important that he should be able to picture to himself the exact form that such changes will produce.

SPECIFICATION.—It is assumed, in this case, that three branches are to be carried off from a 24-inch pipe in such manner that the angle made between the axis of each branch pipe and the axis of the main pipe is one of 135°; further, that the divergence of the axes of the branch pipes, as

Digitized by Google

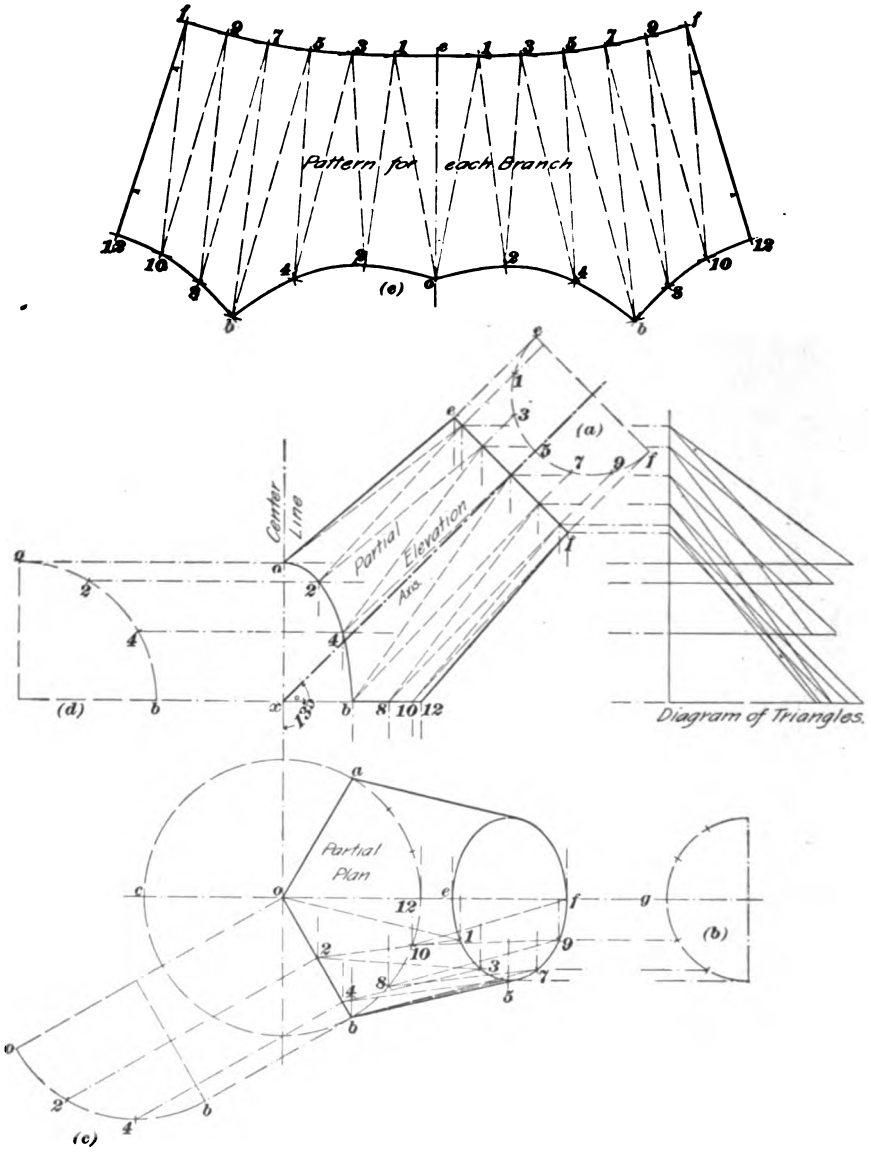


FIG. 16.

Digitized by Google

shown in the plan of the fitting is such that they form equal angles with one another. The open ends of the branches are assumed to be equal, each being 14 inches in diameter. The fitting is well shown in a perspective way in Fig. 14, and from that view it is possible to gain an excellent conception of the prevailing conditions. The drawings are to be made to a scale of 1½ inches equals 1 foot and the proportions to be maintained are set forth in the following construction:

CONSTRUCTION.—This problem illustrates a case in which comparatively little work in projection is employed, although it is of the highest importance that the student should be able to understand and recognize the need for the various steps taken. In the first place, a circle *a b c*, Fig. 16, whose diameter shall be equal to that of the large pipe, may be described in the plan; the outline of this circle is next divided, either by spacing or with the 30° triangle, into three equal parts, thus locating the points *a*, *b*, and *c*. Indicate the sectors of the circle by drawing the lines *a o*, *b o*, and *c o*; it is important that one of these sectors should be in the position of the sector *a o b*, Fig. 16, in order that the axis of one of the branches may be shown in the elevation in its true length. The vertical center line shown in Fig. 16 may now be drawn, and should pass through the point *o*, the center of the circle in the plan. Next, from any convenient point on this line, as at *x*, draw a line at the given angle—that is, 135°—to serve as the center line, or axial line, of the branch pipe.

At any convenient point on this line, chosen with regard to maintaining the proper proportions of the fitting, the perpendicular *e f* is erected—in this case 28 inches from *x*—and it may be assumed that a section on this line shall be a circle of the same diameter as one of the branch pipes. Accordingly, the half-full view shown at (*a*) is constructed, and the outline of the semicircle divided into a convenient number of equal spaces, in this case six; the points thus located are then projected to the line *e f* in the manner shown in Fig. 16. The foreshortened view of this section is next

Digitized by Google

projected to the plan by the aid of the half-full view shown at (*b*), and from the points *a* and *b* lines are drawn that shall be tangent to this foreshortened view. The plan of this fitting, or as much as is necessary for the production of the pattern, is now complete, and it will be seen that the lines *a o* and *b o* represent the miter lines, or the lines of intersection, that separate the different branches of the fitting. At this juncture the draftsman is required to select, at pleasure, an outline that shall be adopted for the full view of a section on these lines. It may be stated that the usual practice is to adopt a parabolic curve for the outline of this section, but since in this instance the drawing of such a curve would involve additional work on the part of the student, the purposes of the present problem will be as well served if the section be considered as an arc, or quadrant, of a circle. Accordingly, a view is constructed at (*c*) in which the full view of the section on the line *o b* may be shown, and in order that the projection of this miter line may be indicated on the elevation, the view at (*d*) is also drawn.

After the views at (*c*) and (*d*) have been constructed, and before any points are located on the outline of the curves there shown, an important matter should be considered: Since a number of points are to be located on the lower base of the figure to be developed, and since, in accordance with preceding instruction, these points should be equal in number to those on the upper base of the solid, their arrangement should be carefully planned; the points *o* and *b* at the upper and lower extremities of the miter line are already fixed, and, if possible, the division of the lower base should be such that these points may be utilized, in order to avoid confusion. An inspection of the drawing in the plan will show that a horizontal center line may be drawn that will divide the fitting—or as much of it as is necessary for the development—into symmetrical halves. This line (*c g*) may now be drawn, and it will be seen that of the six spaces required for the lower base of the fitting, three of them may be located on the outline of the large circle in the plan and the remaining

Digitized by Google

three on the outline of the full view of the miter line at (*c*); this is indicated in Fig. 16 by the points *8* and *10* in the plan and by *2* and *4* in the views at (*c*) and (*d*). The points *2* and *4* at (*c*) are next projected to the miter line *o b* in the plan, where, for convenience, they are designated by similar numbers; they are also noted at (*d*), and, together with the points *8* and *10*, are then projected to the elevation.

It is now possible to represent the remaining sides of the triangles in the plan and the elevation, and lines may be drawn between the successive points in those views; thus, *o e* being already represented by a portion of the horizontal center line in the plan, draw *o 1*, *1–2*, *2–3*, *3–4*, etc., and in like manner draw similar lines in the elevation. The true lengths of these lines are next determined by means of the diagram of triangles constructed in Fig. 16 at the right of the elevation by the method previously shown for such cases. It will now be seen that the true lengths of all required distances may be found in the drawings thus far constructed; thus, the true lengths of the spaces on the upper base may be taken from the view at (*a*), those on the miter line may be taken from the view at (*c*), and the remaining spaces on the lower base, from the outline of the large circle in the plan.

Accordingly, in any convenient place on the drawing, draw a line of indefinite length, as the line *e o* at (*c*), and make it the same length as the correspondingly lettered line in the elevation (which is there shown in its true length). Next, with the point *e* as a center and with a radius equal to the distance *e 1* at (*a*), describe an arc of indefinite length, afterwards intersecting this arc at *1* with an arc described from *o* as a center, with a radius equal to the length of the hypotenuse of the triangle that represents the true length of the line *o 1* of the plan. The remaining triangles necessary for the production of the pattern may be constructed in a similar manner; and, if desired, the work may be done on alternate sides of the line *o e* at (*c*), thus completing the full pattern for one branch of the fitting. After allowing for the necessary locks and edges required, three pieces may be



Digitized by Google

cut out similar to the irregularly shaped outline shown at (*c*), and the fitting made up in the usual way. It will be seen that the construction here given may have many variations; that is, the size of the different openings may be changed at will, and all the branches may be similar or of different diameters. The length of the different branches is also a matter that may be altered at the pleasure of the draftsman, and by dividing the plan to suit the requirements of any particular case, any number of openings may be introduced. For the general purposes of the blowpipe fitter, this fitting will be found to possess many advantages, and the student should thoroughly master its construction.

---

PROBLEM 28.

**9. To develop the patterns for a furnace setter's "center" boot.**

EXPLANATION.—The sheet-metal worker engaged in erecting hot-air heating plants has frequent use for a fitting, or transition piece, to use in connecting pipes that are different in sectional outline. The case of most frequent occurrence, perhaps, is that of the oval or rectangular riser to which the round cellar pipe must be connected in a suitable way. This result is usually accomplished—although in a very objectionable way from the standpoint of the modern and up-to-date heating engineer—by the arrangement shown in Fig. 17; that is, the riser is allowed to project some distance into the cellar, is capped at its lower extremity, and a circular collar is cut into one of its flat sides. It will be seen that this fitting does not admit of the best conditions of service, since a certain amount of the capacity of the round pipe is at once cut off, and, besides, the air must make a sharp turn at

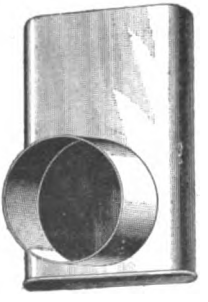

FIG. 17.

Digitized by Google

nearly a right angle. If a fitting of the form shown in Fig. 18 is used in such cases, a three- or four-pieced elbow will give a gradual turn and afford at the same time a ready means of making direct connection with the furnace; for the elbow at the bottom of the fitting may be turned in any desired direction, thus often saving elbows or angles in the round cellar pipe. For the purposes of exemplifying this problem, the drawings—which are to be made to a scale of 3 inches to the foot—represent a connection between a round pipe 12 inches in diameter and an oval stack 5 inches by 16 inches; the cross-section of this oval pipe is represented by a figure having parallel sides 5 inches apart and its ends formed by semicircles, as in the "oval" pipe in Problem 23. The height of the transition piece may be taken as 6 inches, and, as is usual in such cases, collars 2 inches in height are attached at each end of the fitting.

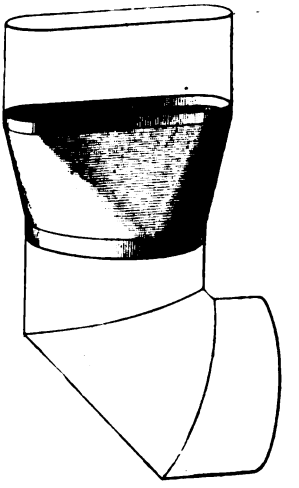

FIG. 18.

CONSTRUCTION.—As may be understood from the perspective view of this fitting shown in Fig. 18, the development of the pattern is by triangulation. In making the projection drawings, the plan is to be drawn first. Begin this with the vertical center line $A\,B$, as in Fig. 19, and then construct the outlines of the upper and lower bases of the fitting in accordance with the dimensions previously given. The horizontal center line $C\,D$ may then be drawn, and it will be seen that the plan is thus divided into symmetrical quarters; all the work that is necessary for the production of the pattern may therefore be accomplished in one of these divisions. The elevation is next produced, as in Fig. 19. The projection drawings being now complete, the next step is to arrange the triangles on the irregularly curved surface of the fitting, and then to find the true lengths of all

Digitized by Google

required lines, as in former problems. It will be seen, from an examination of the drawing in the plan, that the portion of this fitting bounded by the lines *C a*, *a b*, and *b C* is a plane triangle; this triangle may accordingly be disregarded in the location of the triangles for the remainder of the surface. The outline of the curved portion of the upper base is therefore divided into a convenient number of equal spaces, in this case four, and an equal number of spaces are set off on the outline of the lower base.

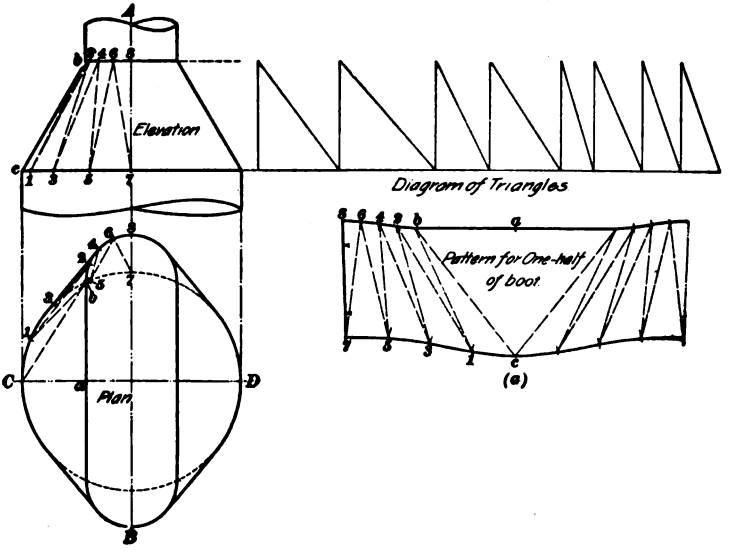


FIG. 19.

For convenience of reference, the points that designate positions on the lower base may be indicated by the odd numerals *1*, *3*, *5*, and *7*, while the points on the upper base may be marked with the even numerals *2*, *4*, *6*, and *8*. Draw lines in the plan between succeeding points, that is, draw *C b*, *b 1*, *1–2*, *2–3*, etc., and project these lines to the elevation. Since these lines cross one another in the plan, it is necessary to be very careful not to mistake one for another; it is for this reason that successive numbers should

Digitized by Google

be chosen for the points in regular order, and if this arrangement is adopted, error will be less frequent. The triangles having now been laid off on both views, it remains only to find the true lengths of such lines as are shown foreshortened and to construct the triangles in their full size in the pattern. The usual method of finding these true lengths by the aid of a diagram of triangles is shown in Fig. 19 and needs no explanation, since the student is already familiar with the method of procedure.

The construction of the triangles in their full size in the pattern at (*a*) is a comparatively easy matter, since the true lengths of the distances on the upper and lower bases are shown in the plan, and these lengths may be taken directly therefrom in the dividers. The allowances for side locks and for seaming are made in the customary way; the patterns for the upper and lower collars, being merely strips of metal 2 inches wide and of lengths that may be ascertained by taking the stretchouts of the upper and lower bases, are also very simple and need not be explained. It may be stated that fittings of this form are now coming into very general use, and several of the prominent jobbing houses carry them regularly in stock. Since there is such a variety of sizes in the furnace worker's experience, it is very desirable that the mechanic should be informed as to the best means of producing the pattern for any special size that he may have occasion to use.

---

PROBLEM 29.

**10. To develop the patterns for a furnace setter's "offset" boot.**

EXPLANATION.—In the installation of hot-air furnace work, the upright pipes, or risers, being enclosed in the different partitions of a house, it frequently happens that when the furnace setter comes to connect his pipes, he finds one or more of them directly over a stringer, or subjoist, and

Digitized by Google

that the fitting illustrated in the foregoing problem cannot be used. In such cases, what is called an *offset boot*, shown in Fig. 20, is very often employed. This is a very useful fitting, and since the amount of offset can be varied at the pleasure of the draftsman, a fitting of this sort is capable of many adaptations. In this problem, the connection is to be represented as made between pipes of the same size and form as those in Problem 28; the offset is one of 6 inches, and the drawings, as before, are to a scale of 3 inches equals 1 foot.

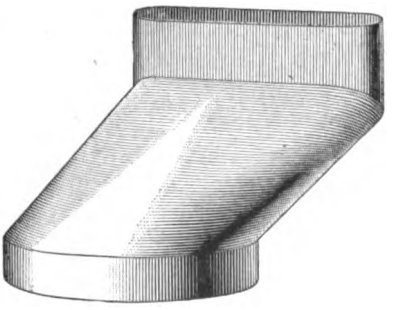

FIG. 20.

CONSTRUCTION.—The plan shown in Fig. 21 is first constructed. In this drawing it will be seen that the offset of 6 inches is measured along the horizontal center line from the point $q$ on the outline of the circle to the right-hand edge of the outline of the oval pipe. The elevation is next constructed. In this view it is seen that the upper collar of the fitting must be so made as to allow the free passage of the air. If a straight strip of metal were utilized for the pattern of this collar, a certain amount of the air passage would be obstructed, and, to overcome this difficulty, the upper line of intersection—$b' r'$ in the elevation—is given a slight inclination. This line of intersection is determined as follows: The height of the fitting being stated as 6 inches, a vertical line is carried to the elevation from the right-hand edge of the plan; a horizontal line is then drawn through the elevation at any convenient distance above the plan. A portion of this line is taken for the lower base of the transition piece, as may be determined by the projection of the points $a$ and $q$ from the plan. On the vertical line first drawn, the position of the point $r'$ is next fixed 6 inches above the point $x$; draw the line $q' r'$ in the elevation and bisect the upper angle formed between this line and the

Digitized by Google

right-hand outline of the upper collar. To complete the projections, the left-hand edge of the oval pipe may next be projected to the elevation and the line $a'\,b'$ drawn in that view.

It will now be seen that it is necessary to determine, on the line $b'\,r'$, the outline of a section of the oval pipe. This is accomplished by first dividing the outline of the curved portion of the oval pipe in the plan into a number of equal spaces, eight in this case, and projecting the sectional view in the usual way, as shown at (*a*). This operation determines the true distances between the points on the upper base of the irregular transition piece. The outline of the semicircle in the plan is next divided into the same number of spaces as were used for the curved portion of the upper base. These points on the different bases may now be indicated by letters, as shown in Fig. 21; that is, *a*, *c*, *e*, etc. on the lower base and *b*, *d*, *f*, etc. on the upper base. The plane triangles *a w b* and *q r v* may for the present be disregarded, and, as required in the case of triangulation developments, the triangles needed for the development of the curved surface may now be indicated in both views by drawing lines between the succeeding points thus noted; that is, draw *a b*, *b c*, *c d*, etc.

The next step in the production of the pattern is to determine the true lengths of these lines by means of a diagram of triangles. To avoid confusion, these triangles are set off on both sides of the elevation. The manner in which this is done in Fig. 21 is slightly different from that used in the preceding problem, but the method has already been given in *Development of Surfaces* as one of the modified methods of triangulation development. It will be seen that the required distances have been taken from the plan and set off on the horizontal base line from the vertex of the right angle, and that the letter used to designate the triangle is, in each case, the last one indicated in the plan; that is, the first triangle constructed is the one needed to determine the length of the line *b c*, and is designated by the letter *c* in the diagram of temporary triangles. The

Digitized by Google

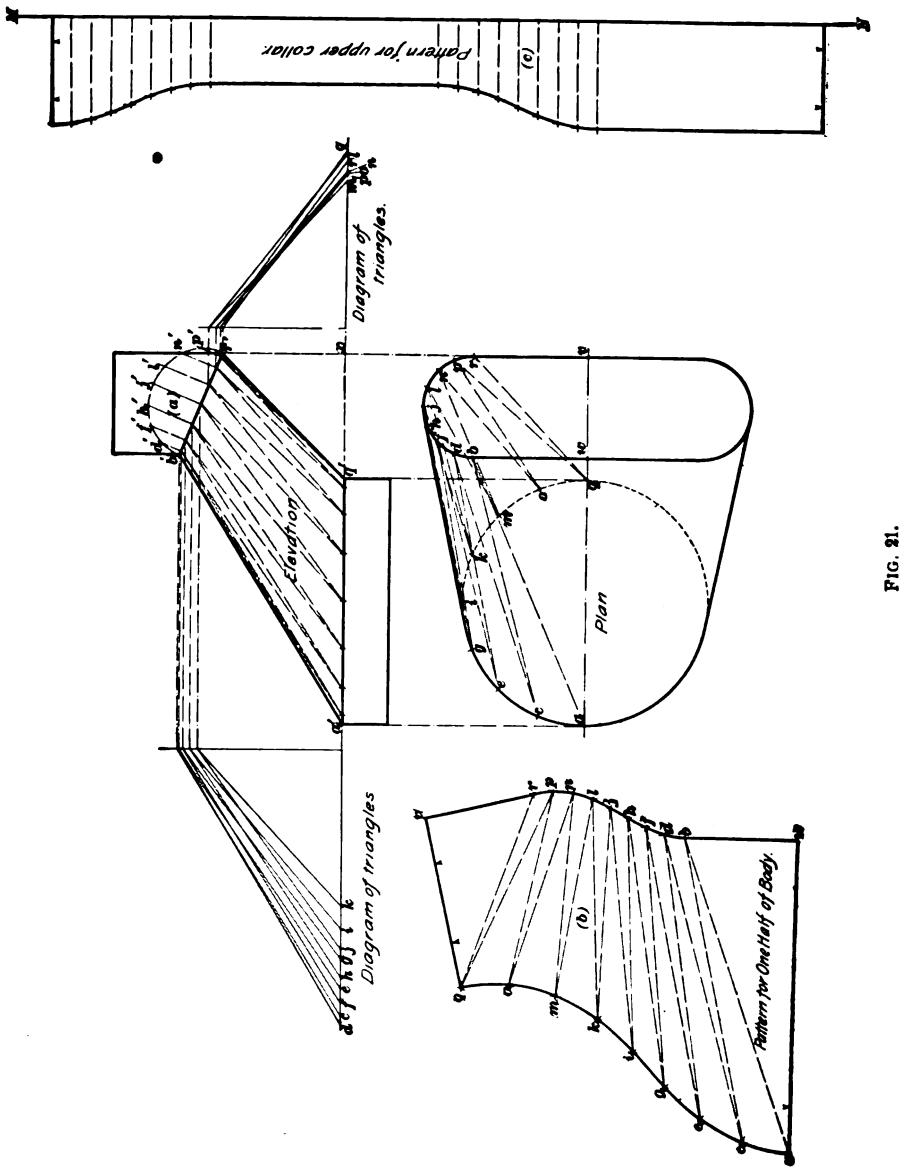


FIG. 21.

Digitized by Google

letter *d* indicates the triangle by which the length of the line *c d* is found, etc.

The construction of the pattern is made in the following way: The line *a' b'* being shown in the elevation in its true length, and being, besides, the longest of the true edge lines of the elevation, is first set off in a convenient place on the drawing, as at (*b*). The angle *a w b* is a right angle, as may be determined from the plan, and is accordingly copied at (*b*) as shown, the length of the side *w b* also being taken from the plan. Next, the triangle *a b c* is constructed at (*b*) in the usual manner, and the completion of the remainder of the pattern differs from former constructions only in the fact that the distances for the radii *b d*, *d f*, *f h*, etc. are taken from the outline of the sectional view that was constructed at (*a*). The drawing at (*b*) shows one-half of the complete pattern for the transition piece, but since it is not desirable to make the seams for a pattern of this shape at such places as along the lines *a w* and *q v*, the pattern is usually cut as on the line *i j*. The resulting pieces are then treated as one-half of two separate patterns, and the lines *a w* and *q v* become, respectively, center lines for the different patterns. To the outlines thus determined, edges are then added in the usual way. The pattern for the upper collar is next laid out by the usual method adopted in the case of parallel forms, as shown in Fig. 21 (*c*); the stretchout for this development is, of course, taken from the outline of the oval pipe as it is shown in the plan. The pattern for the lower collar is, as in the last problem, a straight strip of metal and needs no further explanation.

Patterns of this form, to which the method by triangulation must be applied, require the close attention of the draftsman, and unless he is very particular to observe the succession of points in their regularly occurring order, he is very apt to become confused. The method of designating these points by letters in regular order, or by numbers similarly arranged, is of great help to the draftsman, and no complicated development should be undertaken without first adopting some regular method of indication.

Digitized by Google

PROBLEM 30.

**11. To develop the patterns for an irregular elliptical elbow.**

SPECIFICATION.—In the erection of the smoke pipe for a certain class of steam heaters provided with elliptical collars, it is often desirable, in order to obtain the greatest amount of headroom in the cellar, to make the entire line of pipe elliptical in sectional outline. To accomplish this result, an elbow like that shown in perspective in Fig. 22 must be used; for, if a regularly made elliptical elbow were used, the major axis of a section through the main pipe would, in certain cases, be in a vertical position, and would involve increased cellar obstruction.

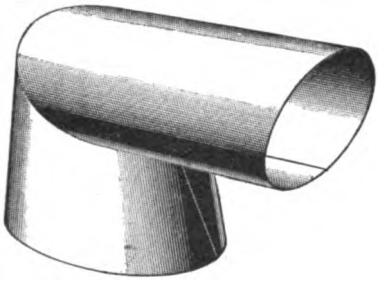

FIG. 22.

The drawings for this problem are to be constructed to a scale of 1½ inches to the foot, and the sectional view of the main pipe is assumed to be the same in outline as that of the collar on the heater. This ellipse may be described by circular arcs, as in *Geometrical Drawing*, its major axis being 20 inches long and its minor axis 12 inches long. A height of 10 inches is assumed between the shoulder of the collar and the under side of the main pipe.

CONSTRUCTION.—First construct the ellipse whose major axis is represented on the horizontal line $a\,b$, as shown in the plan, Fig. 23; this ellipse is assumed to represent the outline of the heater collar and will serve for the plan view of the lower base of the solid that is to be shown in the elevation. From the point $x$, at the intersection of the major with the minor axis, carry a vertical line of indefinite length upwards to the elevation and draw the horizontal line $a'\,b'$ in that view for the lower base of the elbow.

Digitized by Google

Parallel to $a'\,b'$ and 10 inches above that line draw $c\,c'$, and extend it indefinitely on both sides of the vertical. At any convenient point on this line, as at $c'$, erect a perpendicular, on which, as a minor axis, construct the ellipse shown at $(a)$. This is to be of the same size as the ellipse previously constructed in the plan. From the upper end of the minor axis at $(a)$, carry toward the elevation a horizontal line of indefinite length. Next fix the point $w$ on the vertical line drawn through the elevation midway between the lines $c\,c'$ and $d\,d'$, and through this point draw a line at an angle of 45°. Draw $a'\,d$ and $b'\,c$ to represent the lateral outlines of the lower section of the elbow. The upper section of the elbow is now seen to be defined by portions of the lines $c\,c'$ and $d\,d'$; the outer extremity of this section is therefore defined by drawing a vertical line at any distance from $d$ suitable for the width of sheet metal that is to be used in the construction of the elbow.

This completes the elevation and it now remains to finish the drawing by projecting the several points to the plan; here it is to be noted that the foreshortened view of the section on the line $c\,d$ will be represented therein by an ellipse the exact size of the one at $(a)$. This is an important principle and is worthy of the student's careful consideration; for by this principle the drawing of sectional views may often be considerably shortened. The right-hand half of this outline, however, will be represented on the drawing by a dotted line, as shown in Fig. 23, since that portion is one of the hidden edges of the solid.

The pattern for the upper section of the elbow may now be produced by the well-known method for solids developed by parallel lines; and it will also be noticed that if this pattern is first developed, measurements may be taken along its curved outline for the actual distances on the line $c\,d$. Since this will obviate the necessity of constructing a sectional view, some work, therefore, will be saved by the student. Divide one-half of the outline of the view shown at $(a)$ into a convenient number of equal spaces, ten in

Digitized by Google

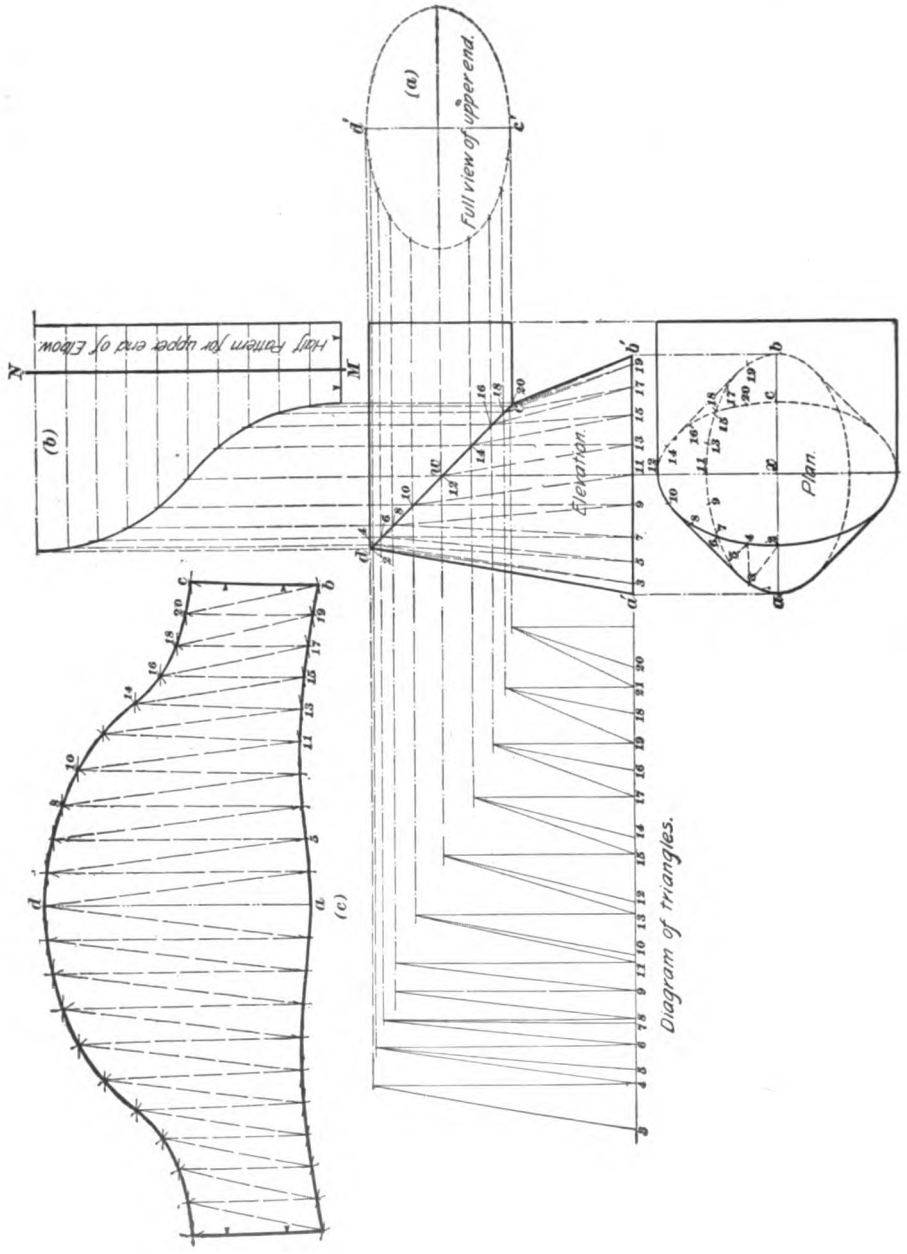


FIG. 23.

Digitized by Google

Fig. 23. Lay off and develop the stretchout *M N* shown at (*b*); the pattern is then produced in the regular way by projecting the points on the outline at (*a*) to the line of intersection *c d*, and thence to the development at (*b*). The latter view is then finished as shown in Fig. 23, and edges may be added as required. The development of the lower section of the elbow can be accomplished only by triangulation. Further examination of the drawing will show that the line drawn through the points *a* and *b* divides the figure into symmetrical halves. One-half of the ellipse first drawn is accordingly divided by spacing into the same number of equal parts as the half of the view at (*a*). For convenience of reference, these points thus determined are designated in the plan by the odd numerals *3*, *5*, *7*, *9*, etc.

The student may now project the points in the elevation on the line *c d* to their corresponding positions on their proper ellipse, or he may space the latter outline in a manner similar to that shown in the view at (*a*); the work will be more accurately accomplished, however, if he adopts the method by spacing. The points that are located on the outline of the upper base may be indicated, as in Fig. 23, by the even numerals *2*, *4*, *6*, *8*, etc. As in previous problems, the triangles on the surface of the lower section of the elbow may now be represented on the drawing by lines drawn between the successive points on the upper and lower bases; that is, draw *a 2*, *2–3*, *3–4*, *4–5*, etc., and project these lines to the elevation. The true lengths of these lines are next determined by means of the diagram of triangles shown at the left of the elevation.

Everything now being in readiness for the development of the pattern for the lower section of the elbow, the line *a d* may be set off in any convenient place, as at (*c*); its length should be the same as *a′d* of the elevation, since in that view the line is shown in its true length. This pattern is completed in the usual way, but it should be noted that the radii for the distances on the upper base are taken from corresponding positions on the curved outline of the pattern at (*b*). If desired, the work may be carried on at the same

Digitized by Google

time on both sides of the line *a d* at (*c*), as shown in Fig. 23, thus producing the complete pattern for the lower section of the elbow.

---

PROBLEM 31.

**12. To develop the patterns for an oblique connection in pipework.**

EXPLANATION.—In the blowpipe worker's experience, it often happens that lines of pipe obliquely inclined must be connected to the main lines of a system. The measurements for such connections should be such as will enable the draftsman to lay the work out on the drafting board and develop

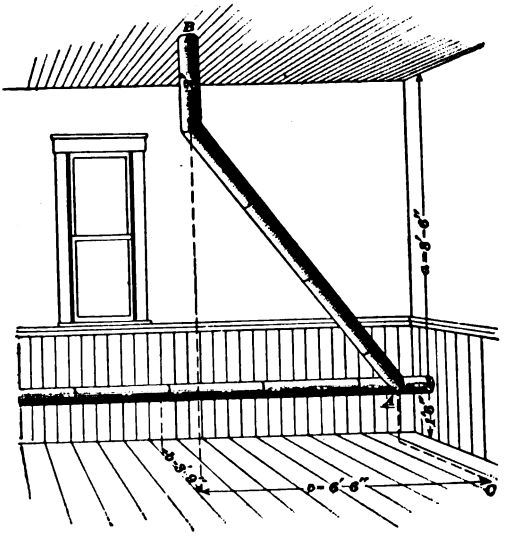


FIG. 24.

the patterns for the different pieces, unaided by any trial fittings. In other words, the measurements must be so accurately taken that the work when completed will fit in position without requiring any subsequent adjustments. When the work is such that only square bends are needed in

Digitized by Google

the construction of the fittings, the question of how the measurements shall be taken is a comparatively simple one, since the required drawings are in all such cases right views. When the conditions are as shown perspectively in Fig. 24, however, the center lines of the different pipes cannot be represented in their full lengths in right views, and since it is necessary to have these lines shown in their true length —that is, not foreshortened—oblique views will be required. Measurements for such constructions should always be taken along the center lines of the various pipes, for when this is done, the drawing of the required views will be greatly simplified. It should also be noted that such measurements may be more easily and accurately taken if the different points are reached by means of right angles; exactly what is meant by this will become apparent to the student as he follows the construction of this problem.

The illustration in Fig. 24 represents the interior of a room in which a line of pipe already installed passes through in a horizontal direction. It is proposed to connect a branch pipe of the same diameter at *A* and to carry it by the least number of turns to the point *B* on the ceiling of the room, and thence vertically upwards to the room above. The draftsman sent to look after this work first measures the height of the room and finds that it is 10 feet from floor to ceiling; next, he ascertains that the center line of the horizontal pipe is 1 foot 6 inches above the floor Deducting the second measurement from the first, he obtains as a remainder 8 feet 6 inches and jots these figures in his notebook on a rough sketch as the dimension *a*, Fig. 24. He then plumbs down from the point *B* and also from the under side of the horizontal pipe, and measures the distance on the floor between the points thus determined; this distance is found to be 3 feet 9 inches, and is noted as the dimension *b*, Fig. 24. The remaining dimension *c*, Fig. 24, is measured after first erecting a perpendicular to the center line of the pipe at the point *A*, and then laying off a distance of 3 feet 9 inches to the point *C*; before this can be laid off, however, the position of the point *A* and the center line of the

Digitized by Google

horizontal pipe must be indicated on the floor by the aid of the plumb-bob, as in the case of the point *B*. After this work has been performed, the dimension *c*, Fig. 24, may be readily measured, and is found to be 6 feet 6 inches. All the necessary dimensions having now been measured, the required

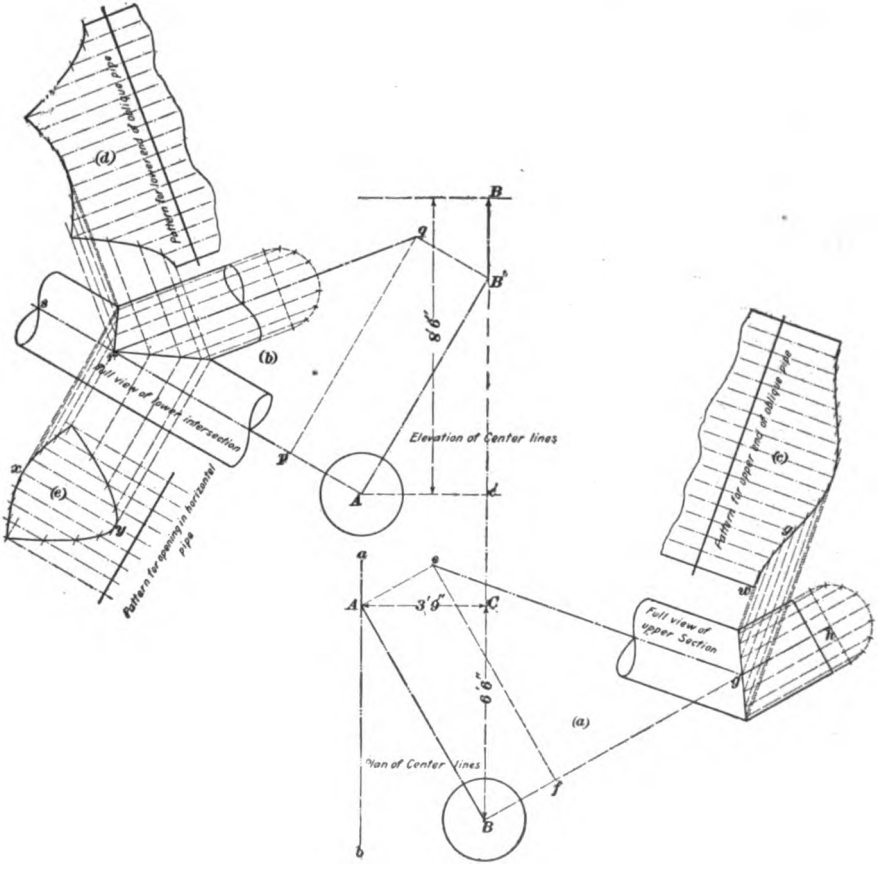


FIG. 25.

drawings may be constructed, and for the purposes of this problem, the dimension figures are to be laid off to a scale of $\frac{1}{2}$ inch equals 1 foot. But since this would render the sizes of the pipe too small to be distinctly shown on the

Digitized by Google

drawing, the latter may be represented as though its diameter were twice the length indicated in Fig. 24; that is, the circle described to represent the outline of the pipe is to be $1\frac{1}{4}$ inches in diameter on the drawing made by the student.

CONSTRUCTION.—As in the majority of cases, the plan is first constructed, and, for the present, the student is to pay no attention to any but the center lines of the different pipes. All necessary measurements can thus be represented, and the determination of the true length of the oblique line of pipe can be ascertained much more readily if the drawing is not complicated by the addition of other lines. Draw a vertical line of indefinite length, as *a b*, Fig. 25, to represent in the plan the center line of the horizontal pipe. Fix the point *A* at any convenient place on this line. The position of the point *B* is next determined by first erecting at *A* a perpendicular to *a b* 3 feet 9 inches in length and then drawing *C B* parallel to *a b*—the distance between the points *C* and *B* being, as shown in Fig. 25, 6 feet 6 inches. The center line of the oblique pipe may now be represented in the plan by a line drawn between the points *A* and *B*. The elevation of these lines is next constructed by the aid of the dimension *a*, previously determined as 8 feet 6 inches. As this view is produced, the student will understand that the vertex of the angle for the upper elbow should be represented at a point below *B*; for, if it were not thus represented, the seam of the elbow would project above the ceiling. The point *B'* may therefore be conveniently located 24 inches below *B* in the elevation and a line drawn between *A* and *B'*, as in the plan. A study of the views that have now been drawn will reveal the fact that neither of them shows any pair of adjacent center lines in their true lengths; the center line of the horizontal pipe is shown full length in the plan, while the vertical distance *B B'* is shown full length in the elevation. The oblique center line is foreshortened in both views. It will be seen that a view may be drawn in the same manner as the projection of an imaginary line in an obliquely inclined position was drawn in *Practical Projection* that will serve to show this line in its true



Digitized by Google

length; but it must also be considered that the views to be drawn must show the adjacent axes, or center lines, of the pipes in their true lengths, and, therefore, as was stated in *Practical Projection*, the intersection lines must be represented by straight lines. Hence, if an oblique view is constructed parallel to the line $A\ B$ of the plan, the center lines for the upper elbow will appear as required; i. e., in their full length. Further, if a view is constructed parallel to $A\ B'$ of the elevation, the center lines of the lower connection will also be represented full length. These views are most readily drawn by the aid of right-angled triangles in the following manner:

Draw $e\ f$ parallel to $A\ B$ of the plan and make $f\ g$ of the right-angled triangle at ($a$) equal in length to $c'B'$ of the elevation; produce $f\ g$ to $h$, and $h\ g\ e$ will then represent the center lines of the upper elbow, both of which are now shown in their true length. The completion of the patterns for the upper elbow from this point is fully shown in Fig. 25, and the student will need no further explanation of the process. The actual length of the oblique pipe may be measured on the line $e\ g$ as a center line; the point $g$ should, however, be noted on the pattern, as shown in Fig. 25, in order to provide a measuring point on the pattern when the work is laid out.

The construction of the oblique view from the elevation is made in a manner similar to the one just described; that is, $p\ q$ is first drawn parallel to $A\ B'$ of the elevation, and in the right-angled triangle $q\ p\ r$ the distance $p\ r$ is set off as equal to $B\ C$ of the plan; $p\ r$ is produced to $s$, and the resulting angle $s\ r\ q$ will then be the correct angle for the lower connection to the horizontal pipe. The miter lines in the views at ($a$) and ($b$) are determined by bisecting at ($a$) the angle $e\ g\ h$, and at ($b$) the angles $s\ r\ q$ and $p\ r\ q$, as shown in Fig. 25. If the work of this problem is accurately done, the student will find that the lines $e\ g$ at ($a$) and $q\ r$ at ($b$) are equal in length; this feature of the drawing will serve as a test of its correctness, and is often used by draftsmen for this purpose.

Digitized by Google

The patterns may now be developed after drawing the outlines of the different pipes in the views at (*a*) and (*b*), as shown in Fig. 25. This work, being similar to that given in a preceding problem, will not be explained.

---

PROBLEM 32.

**13. To combine in one piece the pattern for a double oblique connection.**

EXPLANATION.—This problem is introduced for the purpose of showing a construction often made necessary by certain conditions in connections resembling those illustrated in the preceding problem. For example, if it should be found that the true distance from *A* to *B* in Fig. 25, as shown by the length of *cg* at (*a*), is such that the oblique pipe could be made in one piece, the cross-seam required by the construction in Problem 31 would be avoided. When this oblique pipe is of sufficient length, cross-seams are unobjectionable, and the workman can adjust the upper and lower connections separately, thus obtaining the proper relation between the two parts. In cases where it is desirable to make both miters on the same piece of metal, however, the adjustment referred to must be made by the draftsman. Since this is accomplished by the adaptation of certain principles of projection that might not be readily perceived by the student, the method of application is explained at some length in the following construction.

The student may reproduce the plan and elevation shown in Fig 25 to the scale used for Problem 31, and the dimensions there given may also be used.

CONSTRUCTION.—The plan and elevation of Fig. 25 having been redrawn as shown in Fig. 26, it is necessary also to reproduce the full view of the oblique center line, as at (*a*). Next, on the left of the plan and in the position shown at (*b*), Fig. 26, draw a view of the lower connection, in which the axes of both pipes represented are shown in their

Digitized by Google

full length; this view is the same as was shown at (*b*), Fig. 25, and may be copied directly from that drawing.

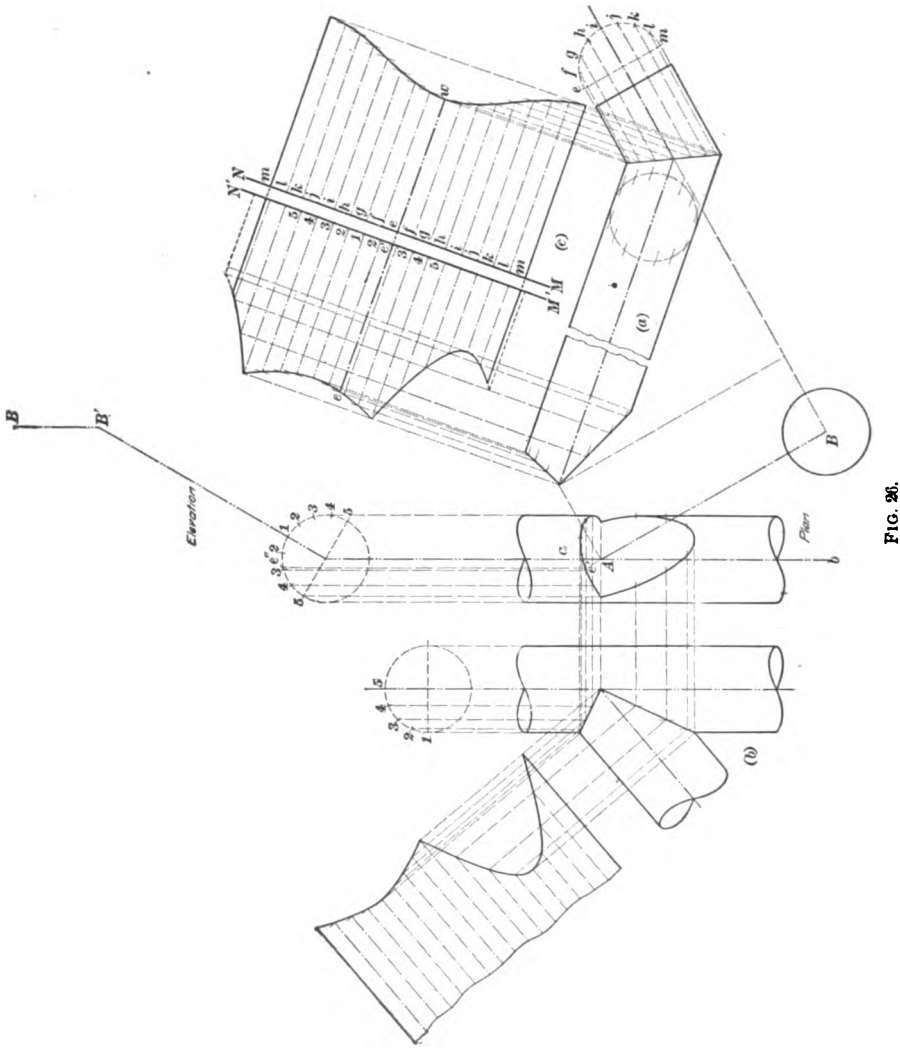


FIG. 26.

The next step is to project the lines of intersection that are represented by straight lines in the drawing at (*b*) to their

Digitized by Google

proper location in the plan. To accomplish this, a full view of the pipe section is drawn, as shown immediately above the drawing at (*b*); the arc of a quadrant is then divided into a convenient number of equal parts, four in Fig. 26, and corresponding points are noted on an end view of the horizontal pipe in the elevation. These points are numbered *1*, *2*, *3*, *4*, and *5* in the illustration, and their relative positions in the two views are determined by the aid of the oblique center line; for, in the view at (*b*), if the point *1* be located, as shown, at the extreme left of the full view, then it will coincide with the oblique center line as represented in the elevation, since a line drawn thus longitudinally on the surface of the horizontal pipe would pass through points in the lines of intersection at the extremities of the opening, that is, through points *x* and *y* in the pattern at (*c*), Fig. 25. By regular methods of projection, now, the miter line for the lower connection is to be represented in the plan, as shown in Fig. 26.

The attention of the student is next directed to the drawing at (*a*), where the semicircle that represents the partial full view of the upper end has also been divided by spacing into similar equal parts. In order to avoid confusion, these points have been designated by the letters *e*, *f*, *g*, *h*, etc. If, now, a line is projected from the point *e* toward the upper miter line, such projected line will pass through the miter at its *highest* point; in other words, through the point *w* in the pattern at (*c*). Further, this line may be continued along the surface of the oblique pipe parallel to the axis, and, if represented in the plan, would coincide for the greater portion of its length with the foreshortened center line *A B*. In other words, if the line *A B* of the plan is extended toward the upper edge of the drawing, the point *e* will be projected until its intersection with the lower miter line may be noted thereon. This is indicated in Fig. 26 by the point *e'*, which is then projected to the elevation and indicated on the outline of the circle at *e''*. The relative position of the remaining points is a matter now easily solved, for, the point *e''* being shown in the elevation between the

Digitized by Google

points *2* and *3*, it may be noted in a corresponding position on the stretchout.

As shown in Fig. 26, two stretchouts $MN$ and $M'N'$ are drawn side by side at (*c*), and the pattern for the upper miter is first developed in precisely the same way as in Fig. 25; the position of the point *e* is noted on the right-hand stretchout, and is then projected to *e'* on the stretchout at the left. The position of the remaining points on the left-hand stretchout is next indicated by spacing in accordance with points shown on the view of the circle of the elevation, and edge lines are then drawn indefinitely toward the left of the drawing. Next, the miter line for the lower connection is copied from the view at (*b*) to the oblique view at (*a*), as shown in Fig. 26, and from the points thus determined, developers are carried to the development at (*c*). This latter part of the work may be somewhat shortened if the development of the lower miter is made from the view at (*b*), as in Fig. 25; a temporary pattern may then be cut out, and its outline marked in a correct location on the drawing at (*c*). This means of showing the lower miter pattern at (*c*) is perhaps the best for the draftsman, since the projection of the miter line from the plan requires great accuracy and he is less liable to become confused from the number of additional lines on the drawing.

The practical applications of the principles shown in this problem are many; the miters at the different ends of the required piece may not be the same as those shown in this problem, but the method of procedure is in all cases the same.

---

PROBLEM 33.

**14. To develop the patterns for a transition piece between a rectangular opening and a round pipe.**

EXPLANATION.—The illustration in Fig. 27 represents a fitting often used by the sheet-metal worker. The bases for ventilator stacks and many fan connections in blast-pipe work are made in this form. The development of the

Digitized by Google

transition piece affords an opportunity for the application of the principles relating to the scalene cone, described at some length in *Development of Surfaces*. The required drawings are to be to a scale of 3 inches to the foot, the dimensions of the rectangular opening 9 inches by 18 inches, and the diameter of the round pipe 8 inches. A vertical height of 1 foot may be assumed for the transition piece.

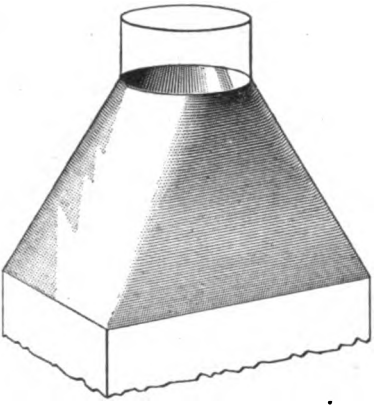

FIG. 27.

CONSTRUCTION.—Draw first the plan and elevation shown by the full lines in Fig. 28, using the dimensions and the scale previously given. The upper and lower bases of the transition piece in this problem are in parallel planes, and for this reason, comparatively few additional lines are required for the development of the pattern. The vertical center line should be drawn, as shown, through the plan and the elevation. Next, it will be seen that if a horizontal line be drawn through the plan, the figure will be divided into symmetrical quarters; all the necessary operations, therefore, may be carried on within the limits of one of the divisions thus set off. Further, if lines are drawn from the points $A$, $B$, $C$, and $D$ to the corners of the rectangle, in the manner shown in Fig. 28, plane triangles $E\,B\,F$, $F\,C\,G$, etc. will be defined on the irregular surface of the transition piece. The reproduction of these triangles in the pattern is a very simple matter, since their dimensions may be taken directly from the projection drawings. A study of the drawings will show also that the portion of the irregular surface defined by $A\,E\,B$ may be considered as a part of the surface of a scalene cone. To develop the pattern for this surface, the outline of the upper base shown in the plan as the arc $A\,B$ is divided into a convenient number of equal

Digitized by Google

parts, four in Fig. 28. From each of the points thus located, lines are drawn to the corner *E*, and these lines are in turn projected to the elevation. Their true lengths

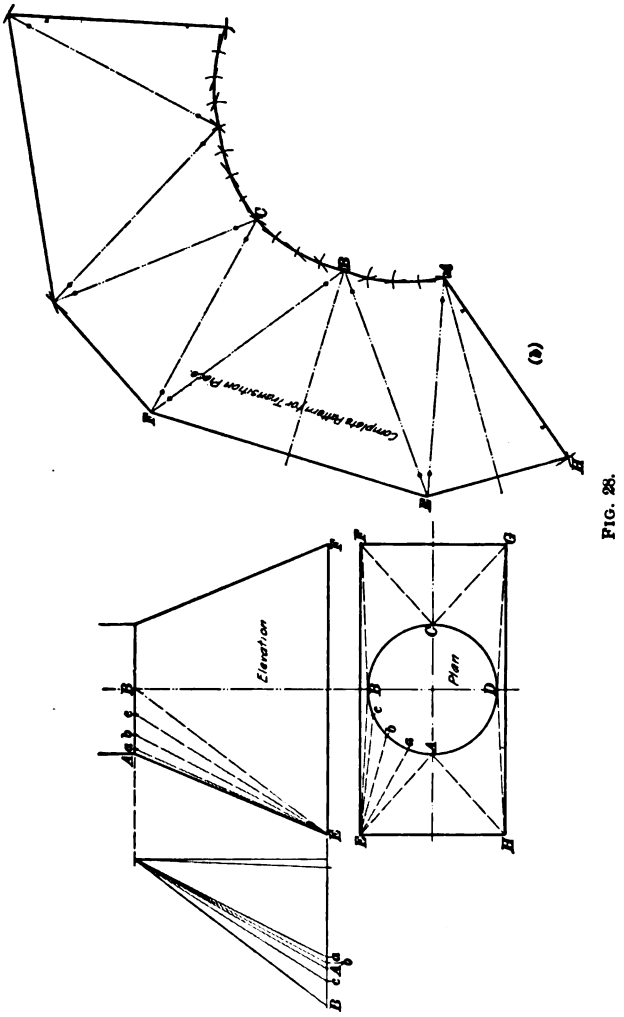


FIG. 28.

are next determined by means of the triangles shown at the left of the elevation in Fig. 28. These preliminary operations having been performed, it is now possible to construct

Digitized by Google

the triangle $H E A$, as shown, at ($b$). Next, with the point $E$ at ($b$) as a common center and with radii equal to the true lengths of the lines $E a$, $E b$, and $E c$ of the plan, describe arcs of indefinite length. Set the dividers to the length of one of the spaces on the upper base—as $A a$ in the plan—and, commencing at the point $A$ at ($b$), step off a number of spaces corresponding to those shown on the quadrant in the upper base of the plan. These spaces are stepped off in the manner shown in Fig. 28, only one point being located on each arc described from the point $E$. After the point $B$ has been reached, the triangle $E B F$ is constructed and the process repeated to the point $C$. The method of completing the development is obvious from Fig. 28, and, if desired, the entire surface of the transition piece may be represented in the pattern. It is customary, however, to develop only one-half or one-quarter of the surface on the drawing board, since the patterns for such pieces are usually too large to permit of their being constructed of one piece of metal.

---

PROBLEM 34.

**15. To develop the patterns for a transition piece having an obliquely inclined base.**

EXPLANATION.—This problem illustrates a condition occasionally met by the workman engaged in erecting stacks through pitched, or inclined, roofs. Another frequent application of the same fitting is in fan connections where the blast pipe is carried away in a slanting, or oblique, direction. The perspective view shown in Fig. 29 represents a round pipe 12 inches in diameter carried vertically through an inclined roof having a pitch of 45°; the curb of the roof to which the flange must be fitted is represented in the plan by a square 19 inches on a side. For the purposes of the drawing, it may be assumed that a plan view of the arrangement would show the round pipe in a central position with relation to the square. The student may construct the projections to a scale of $1\frac{1}{2}$ inches to the foot.

Digitized by Google

CONSTRUCTION.—The plan shown in Fig. 30 is first constructed in accordance with the dimensions just given. Next, the elevation is drawn, and in this view a height of 14 inches may be laid off on the center line above the inclined roof line; the upper base of the transition piece is then represented in the elevation by a horizontal line drawn through the point thus determined, as shown in Fig. 30. If a horizontal center line now be drawn through the plan, the figure will be divided into symmetrical halves, and, as in preceding problems, all work necessary for the production of the development may be confined to one of the divisions thus set off —either the upper or the lower division, at the pleasure of the draftsman.

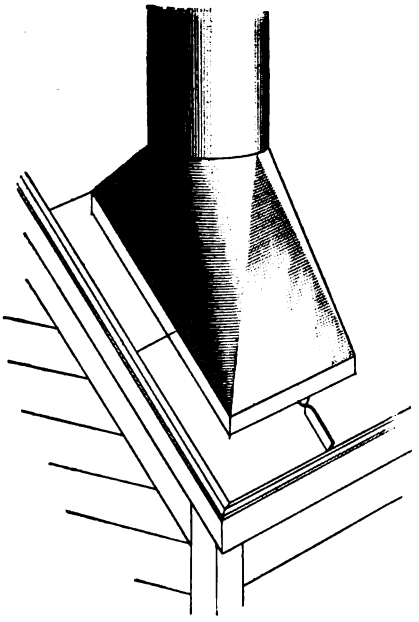

FIG. 29.

As in the preceding problem, plane triangles may be indicated on the irregular surface of the transition piece by lines drawn from the points *A*, *B*, *C*, and *D* to the corners of the square. By the aid of measurements taken from the projection drawings, these plane triangles may be readily reproduced in the pattern when required. From the projections it is apparent that the portion of the irregular surface bounded by the lines *A E* and *E B*, together with the arc *A B*, can be considered as a part of the surface of a scalene cone; also that the same is true of the surface bounded by the lines *A H* and *H D* with the arc *A D*. The scalene cone in the latter case is one of greater altitude than

Digitized by Google

the one first mentioned, although its base coincides with the cone whose vertex is at the point *E*. For the develop-

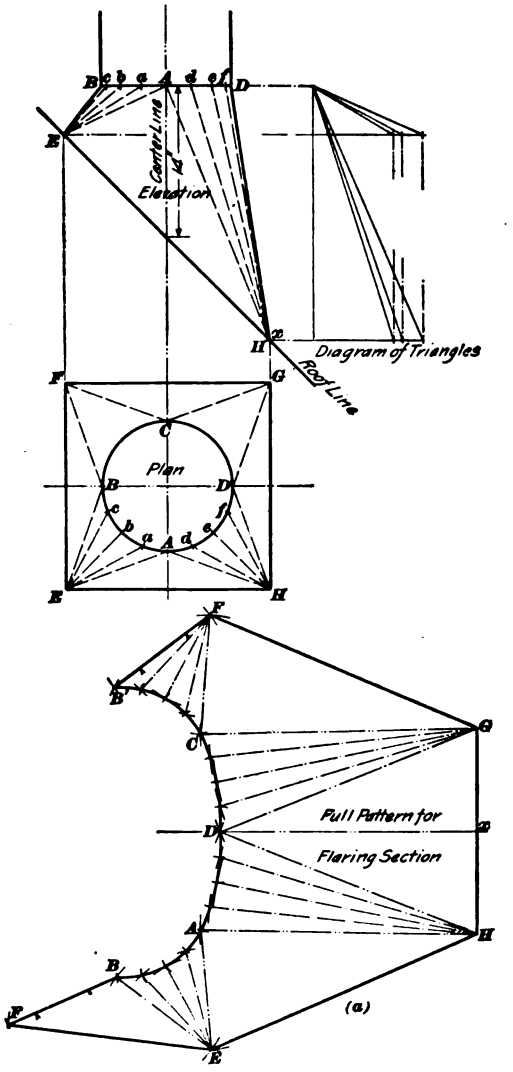


FIG. 30.

ment of the pattern from this point, the work is similar to that in the last problem; that is, the upper base is divided

Digitized by Google

into equal parts, the elements of the cones are represented in both views, and their true lengths are found by a diagram of triangles, as shown at the right of the elevation. This preliminary work having been performed, the triangle *D G H* may next be constructed in its full size at (*a*); the horizontal center line is first drawn and its length *D x* is taken from the outline of the elevation; *G H* is then drawn through the point *x* perpendicular to *D x*, its length being taken from the plan. From the points *G* and *H* as centers, arcs are then described in the manner shown in Fig. 30, their respective radii being the true lengths as taken from the diagram of triangles. Next, the dividers are set to the length of one of the spaces on the upper base of the transition piece; these spaces are then stepped off in the manner described in the preceding problem, until the points *A* and *C* are reached.

The plane triangles *A E H* and *C F G* are next constructed as in the problem of *Geometrical Drawing* in which a triangle is constructed when three sides are given, the side *E H* being taken from the elevation, where it is shown in its true length, and the side *A E* from the diagram of triangles. The completion of the pattern by the addition of that portion of the curved surface bounded by the lines *A E* and *E B* is made in a manner similar to that already shown. The remaining triangle *B E F* is then added to the pattern, thus completing the problem. Owing to the fact that too large a sheet of metal would be required if the complete pattern were made in one piece, it may be desirable, as in the preceding example, to make joints at convenient places in the pattern. Such provision for joints on the necessary laps may be made at the discretion of the draftsman when laying out the full-sized patterns.

---

PROBLEM 35.

**16. To develop the pattern for a regularly flaring roof connection.**

EXPLANATION.—A roof flange or form of roof connection commonly used by plumbers and sheet-metal workers is

Digitized by Google

shown in Fig. 31. Its purpose is to secure a water-tight joint at the place where the vent pipes of a building come through the slanting sides of pitched roofs. A fitting of this kind may be used also in cases of stack work where the outline of the roof curb has not been definitely fixed. As may be seen from the illustration, the flange proper is an irregular frustum of a cone, and its pattern is therefore to be developed by the method usual in the case of radial solids. The roof in this problem has a pitch of 30°, the diameter of the pipe is 8 inches, and the scale used for the drawings is 1½ inches to the foot.

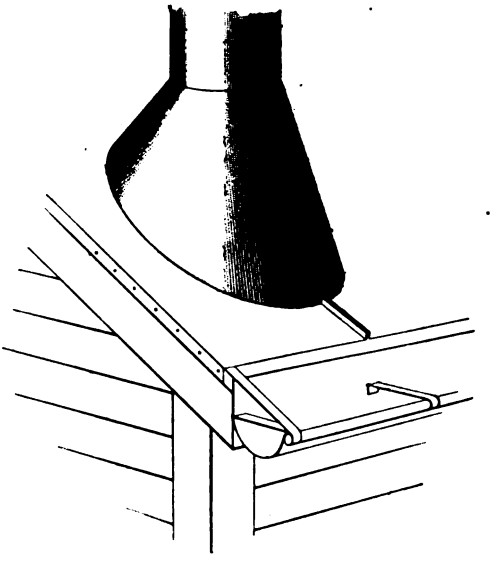

FIG. 31.

CONSTRUCTION.—First draw the vertical center line *A B*, Fig. 32, and then the roof line *C D* at the required angle. Draw next the outlines of the vertical pipe parallel to *A B*; at any convenient height above the roof line, in this case 12 inches, as measured on the center line *A B*, draw the horizontal line of intersection for the upper base of the frustum. Next, represent the lateral outlines of the frustum by lines drawn through the extremities of the line of intersection previously mentioned, and let these lines meet at a common point on the center line, that is, at the vertex of the cone. At the pleasure of the draftsman, these lines may be drawn at any convenient angle; in Fig. 32 they have been drawn with the 30° triangle.

An elevation of the flange is thus completed, and now, in

Digitized by Google

place of drawing a regular plan of the flange, it is convenient to obtain the pattern by a special method often used for radial solids. The necessary work is shown in Fig. 32 by the dotted lines that appear below the roof line, and the

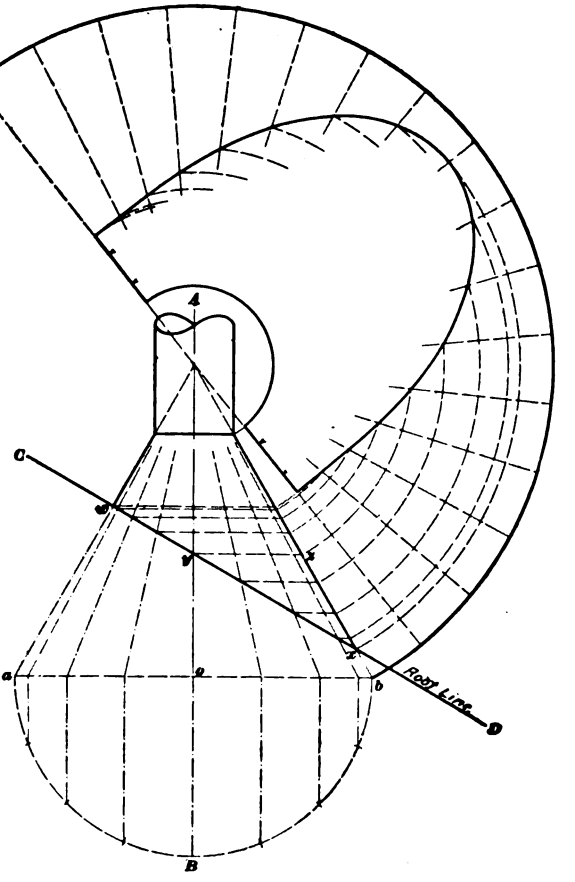


FIG. 32.

process should be familiar to the student from work that has preceded. First, the line *a b* is drawn perpendicular to the center line *A B*, and a base for the frustum is assumed on this line; the lateral outlines of the frustum are therefore produced until they meet the line *a b*, and the semicir-

Digitized by Google

cular half-full view of the base is then described as shown in Fig. 32, its center being located on the center line. The outline of this semicircle is next divided by spacing in the usual manner, and by regular projection methods the elements of the cone are then represented in the elevation. The development of the pattern from this point is a simple operation. First, the stretchout is described from the vertex of the cone and this stretchout is then spaced off in accordance with the spaces appearing on the outline of the full view of the base. Next, the points at the intersection of the elements of the cone with the roof line are projected to one of the true edge lines of the frustum and thence carried to the development in the usual way. The only feature in which this development differs from earlier problems that have been explained lies in the fact that the stretchout forms no part of the finished pattern. The completion of the drawing, except the addition of the edges necessary for the construction of the flange, is fully shown in Fig. 32; since these allowances are similar to those made in preceding problems, further description is unnecessary. For the flat part of the flange, no work on the drawing is needed, since it is evident that the opening in the flat sheet will be in the form of an ellipse whose major axis is equal to the length $w\,x$, Fig. 32, and whose minor axis is twice the length of $y\,z$. This ellipse, therefore, may be laid out directly on the metal by methods that have been given earlier in this Course.

---

PROBLEM 36.

**17. To develop the patterns for an irregularly flaring roof flange.**

EXPLANATION.—No perspective figure is given for this problem. The required flange is, in general appearance, very similar to the one described in the preceding problem, but since, in the case of large pipes, it is often desirable to cut the roof opening in the form of a circle, the sheet-metal worker is frequently called on to lay out his flange so that the full view of its lower base will be an exact circle. The

Digitized by Google

form of the flange necessitated by this change, although closely resembling the frustum of a regular cone, is such that its pattern can be produced only by triangulation. The same scale for the drawings and the same roof pitch may be taken for this problem as was used in Problem 35, but in order that the work of triangulation may be shown to better advantage, it is assumed that the vertical pipe has a diameter of 12 inches and that the height of the flange, as measured along the center line, is 20 inches. A diameter of 3 feet may be taken for the circular opening in the roof, and the relative position of the pipe is such that its axis may be represented as passing through the center of the circular opening.

CONSTRUCTION.—As in Problem 35, the vertical center line is first drawn and the roof line, slanting at the specified angle, is then represented in the elevation. The outlines of the pipe and the upper base of the flange may next be represented as in Fig. 33. In order to determine the position of the lateral outlines of the flange, it is first necessary to describe the semicircle that represents the half-full view of the opening in the roof; that is, the half-full view of the lower base of the flange. This dotted semicircle, as shown in Fig. 33, is described with the proper radius from a center located at the point of intersection of the vertical center line with the roof line; the remaining outlines of the flange may then be drawn as shown in the elevation of Fig. 33. It is next necessary to project the plan view of the flange, and since symmetrical halves may be shown above and below a horizontal center line drawn through the plan, but one of these halves need be represented in the drawing. Draw, therefore, the horizontal line $A\ B$; and, in its proper position, as determined by projection from the elevation, describe the semicircle that represents the half-plan view of the upper base of the flange. Next, by spacing into a convenient number of equal parts, divide the outline of the semicircle that represents the half-full view of the lower base; and, by the aid of the temporary view shown at ($a$), project the foreshortened outline shown in the plan. The upper base

Digitized by Google

in the plan is then divided into a similar number of equal parts. Between the successive points thus located on the two bases, draw lines as shown in Fig. 33 that will divide the irregular surface of the flange into a series of triangles.

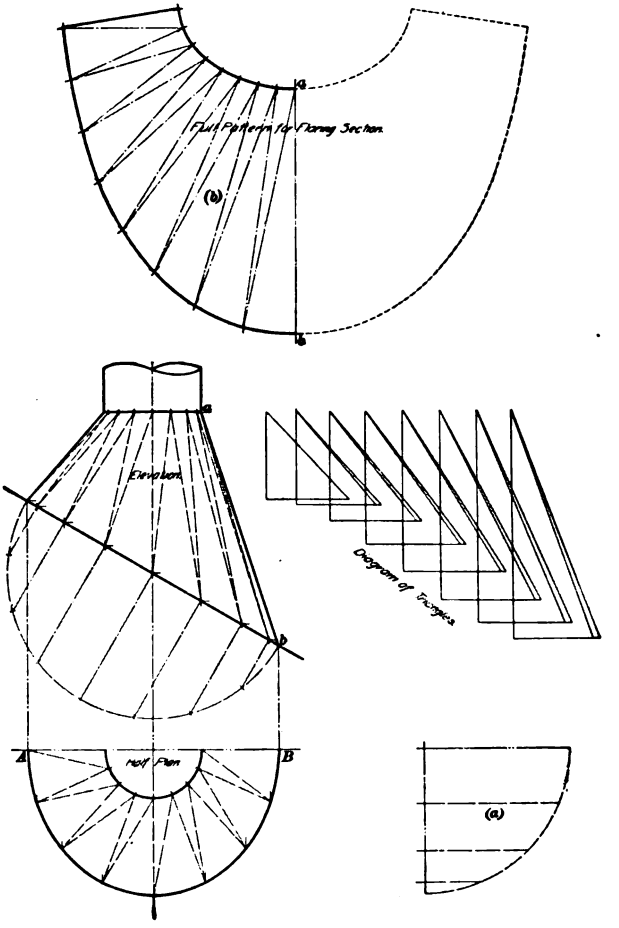


FIG. 33.

These lines are next represented in the elevation by regular methods of projection, and by means of the diagram of triangles shown at the right of the elevation in Fig. 33, their true lengths may be ascertained. The true lengths of all



Digitized by Google

required distances may now be taken from their respective places on the drawing. Those for the upper base are represented in the plan; for the lower base, on the outline of the dotted semicircle; and those for the longer sides of the triangles are shown in their true lengths in the diagram of triangles already mentioned. The pattern may therefore be constructed as shown at (*b*). In this development, the construction should begin with the line *a b*, which corresponds in length with the similarly designated line in the elevation. If desired, the work at (*b*) may be carried on simultaneously on both sides of this line; and, if this is done, the entire pattern for the flange will be produced. The construction of the different triangles required in the pattern is exactly the same as has been explained in similar triangulation problems already given, and the work should therefore present no new difficulties to the student.

---

PROBLEM 37.

**18. To develop the patterns for a gutter, or eave-trough, miter.**

EXPLANATION.—The developments given in this problem are obtained by methods shown for different forms of pipe-work in preceding problems. In the problems referred to, the forms represented were entire cylinders, while in this case only a portion of the cylindrical surface is considered by the patterncutter. The principles involved relate to parallel forms, and the student that has mastered the instruction in *Development of Surfaces* and has applied the knowledge thus gained to the construction of the foregoing problems will have no difficulty in recognizing the principles here applied.

FIG. 34.

A cross-section of the usual form of eave trough is shown in Fig. 34; as ordinarily constructed, the trough consists of a semicylindrical body having a "bead" along one of its edges. When shown in cross-section, as in Fig. 34, the nearly complete circle that represents the bead is tangent

Digitized by Google

to the larger circle and to its diameter extended. Nearly all machines for forming eave troughs require that an addition in the form of a *tongue* shall be made to the bead, in order to engage the beading rod and hold the metal in place while the bead is being formed. This tongue is shown in Fig. 34 as a part of a radius of the small circle, and must be represented in the projection drawing and allowed for in the pattern.

A perspective view of a roof to which it is desired to attach an eave trough of this pattern is shown in Fig. 35. The angles shown at *A* and *B* are right angles, and the

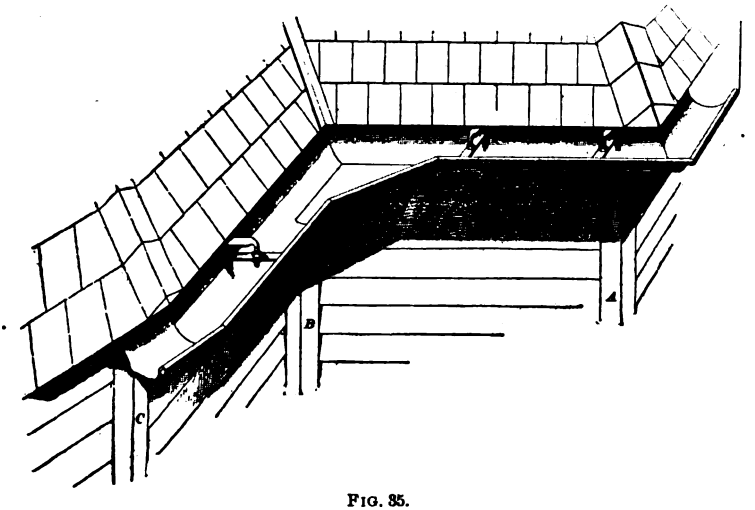


FIG. 35.

angle at *C* is one of 150°. It will be seen that the angles at *A* and *C* require "outside" miters and that at *B* an "inside" miter. The use or meaning of the terms "outside" and "inside," as applied to miter work, may be readily understood from the illustration, the outside miter being used for a projecting angle and the inside miter for a reentering angle, as at *B*. It will be shown during the construction of this problem that the patterns for both inside and outside miters of equal angles are produced at one development, and that the outline of the pattern is the

Digitized by Google

same for either case; the only distinction that must be observed is that the pattern shall be laid off *on a certain side of the curved outline.* Particular attention should be paid to this part of the instruction, since it is a feature applied to many important cases of parallel developments.

For the construction of the patterns of this problem, which are to be drawn to a scale of 3 inches equals 1 foot, it is assumed that the horizontal distance from $A$ to $B$, Fig. 35, is 2 feet 10 inches and from $B$ to $C$ 3 feet. The end view, or cross-section, of the eave trough is drawn as in Fig. 34, the diameter of the large circle being taken as 6 inches and of the smaller circle as 1 inch.

CONSTRUCTION.—The general arrangement of the required views is shown in Fig. 36. It will be seen from these drawings that all lines assumed on the surfaces to be developed will be shown in their true length. The angles at $A$ and $B$ are right angles; at $C$ the angle is one of 150°; the latter may therefore be drawn with the 60° triangle. Bisect the angles $A$, $B$, and $C$ and draw $A\,A'$, $B\,B'$, and $C\,C'$, as shown in Fig. 36; these lines are now considered as miter lines for the development of the pattern. Draw the end view of the eave trough in the position shown in Fig. 36, and from the outer, or left-hand, edge of its outline, draw to the point $A'$ the vertical line shown; carry this line to $B'$ and $C'$. Next, locate points on the outline of the end view, preferably by spacing at regular intervals, as in former problems. It should be noted, however, that these points should be somewhat closer on the outline of the bead, since the curvature is greater there than on the outline of the body; further, that one of these points should be placed at $x$, the extreme outer portion of the outline. As shown in Fig. 36, edge lines must now be carried by regular projection methods from each of the points thus located across the surface of the drawing and continued until they intersect all the miter lines.

In many localities it is customary to make inside miters in such manner that water running with some force down the valley of the roof will not run over the outer edge of the

Digitized by Google

gutter. To accomplish this result, the outer edge of the inside miter, in place of being carried to the point $B'$, is drawn perpendicular to the miter line $B\,B'$ in the manner shown, and the edge lines in the outer half of the trough are drawn parallel to the outer line thus shown. Note that in Fig. 36 a line $w\,y$ has been carried between $A'\,B'$ and $B'\,C'$;

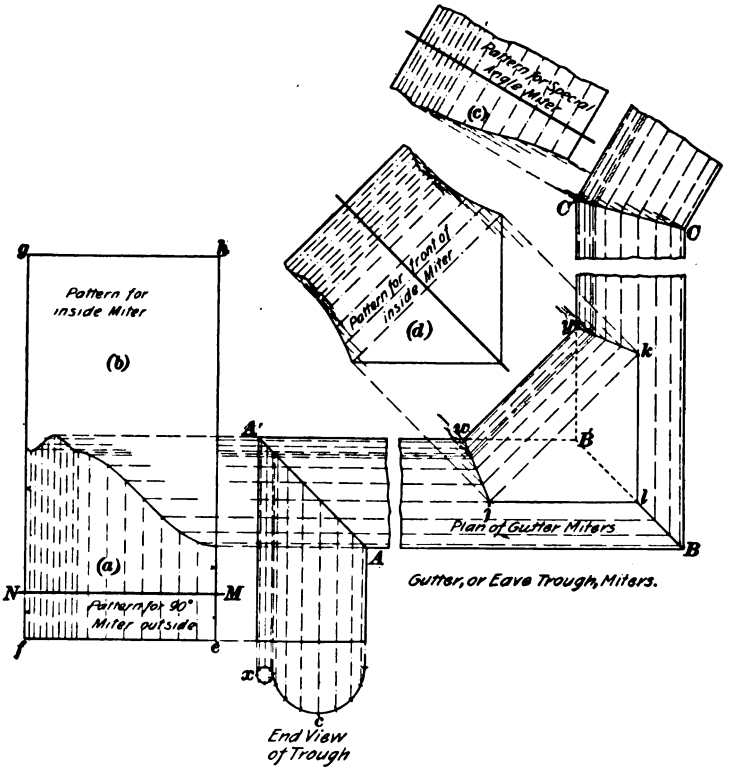


FIG. 36.

that the angles $w$ and $y$ have been bisected; that the bisectors have been carried to the edge line drawn from the point $c$; and that the edge lines thus intersected are drawn parallel to the outer edge of the trough.

These preliminary drawings having been completed, the patterns may now be laid off as follows: First, the

Digitized by Google

stretchout $M N$ is developed as shown at ($a$), and, after the edge lines have been drawn in the regular way, developers are carried from the points of intersection of the assumed edges with the miter line $A A'$. The resulting pattern at ($a$) is the correct form for an outside square miter; and if it is desired to produce the inside miter-pattern, the work may be readily performed by extending the outer edge lines in the manner shown at ($b$). The rectangle $c f g h$ may then be cut out of metal, and, after the central irregular curve has been cut, the lower portion ($a$) may be used for an outside-miter pattern, while the upper portion ($b$) will serve the purpose of an inside-miter pattern. If desired, a similar operation may then be carried on at ($c$) and the patterns for both an inside and an outside miter for the oblique angle at $C$ produced at the same time; it will be seen, however, that the pattern for only the outside miter is shown in Fig. 36. The pattern for the front half of the inside miter is laid off as shown at ($d$), and to this piece is added the plane triangle $j k l$. The necessary edges are then added and the work of developing the patterns is complete.

---

PROBLEM 38.

**19. To develop the patterns for a conical eave-trough outlet.**

EXPLANATION.—In most cases of eave-trough construction, the outlet for the leader, or conductor pipe, is made in the form of a regular cylinder whose diameter is a trifle smaller than that of the leader; the patterns in such cases consist merely of the development of the intersecting cylinders. In Fig. 37, a perspective view of a large gutter is shown, and it is desired to so connect the leader pipe that the opening in the gutter will be somewhat larger than the

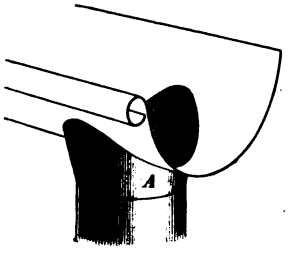

FIG. 37.

Digitized by Google

diameter of the pipe. To accomplish this result, a flaring connection piece must be used, as shown at *A*. It is required to develop the pattern for this fitting. Let it be assumed that the diameter of the leader is 5 inches and that the gutter is what is known as a 12-inch gutter; that is, the diameter of the large semicircle that forms the body of the gutter is 12 inches. Any convenient height may be taken for the connection piece, and the drawings for this problem may be made to a scale of 3 inches equals 1 foot.

CONSTRUCTION.—Draw first the vertical center line *A B*, Fig. 38, and in a horizontal position construct the sectional view of the gutter as shown. As a convenient height for the connection piece, 3 inches may be measured off on the center line below the lower edge of the gutter, and through this point a horizontal line is then drawn. This horizontal line may now be considered as representing the line of intersection between the leader pipe and the flaring connection; it is accordingly laid off in its proper length, that is, $2\frac{1}{2}$ inches on each side of the center line, and the lateral sides of the connection piece drawn as shown in Fig. 38. The student will see from the work shown in Fig. 38 that since the center line *A B* divides the cone into symmetrical halves, it is necessary to

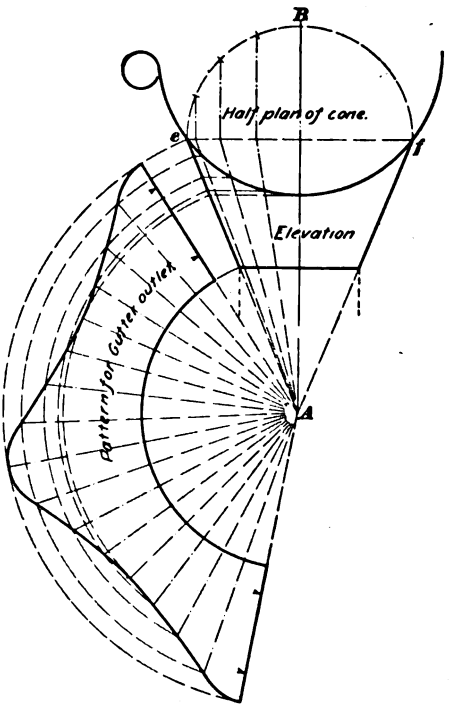


FIG. 38.

Digitized by Google

draw but one of these lateral sides; for the sake of showing the principles more clearly in the illustration, however, the entire cone has been represented. After the student has mastered the principles of this subject, he will avail himself of every expedient in order to lessen the amount of work on the drawing board. An examination of the drawing in Fig. 38 shows that the connection piece consists of a frustum of a regular cone—its lower base (the *upper* base in the illustration) is defined by a portion of the outline of the gutter and its upper base by the straight line that notes the intersection of the conductor pipe.

The first step in the development of its surface consists in the location of elements at regular intervals. This is accomplished by first drawing from the point $e$ an assumed base perpendicular to the axis of the frustum, that is, the line $ef$, Fig. 38. With the line $ef$ as a diameter, a semicircle that represents a half-full view of the assumed base is described from its middle point. Points are then located on the outline of this semicircle by spacing in the usual way, and the elements of the cone are then represented by regular projection methods. The intersections of these elements with the outline of the gutter are then projected to a true edge line, and the pattern is then developed in the way usual with regular cones. Such edges as may be required for locks or laps are then added to the pattern and the drawing is complete. This work being similar to that of preceding problems, and having been fully described heretofore, need not be here considered. Should it be desired to ascertain the exact shape of the opening in the gutter, a development of its form may be made in the usual way; this work, however, is not commonly required of the draftsman and will be omitted.

---

PROBLEM 39.

**20. To develop the patterns for a rain-water cut-off.**

EXPLANATION.—This problem is introduced for the purpose of showing the applications of pipe intersections. It

Digitized by Google

embodies no new principles of patterncutting, but serves rather to aid the student in determining the correct miter lines necessitated by certain conditions. The perspective view given in Fig. 39 represents a familiar form of rain-water cut-off, and an inspection of its different parts shows that the upper portion consists of an inverted **Y**, while the lower portions are merely elbows that direct the contents back into the direction whence they entered the cut-off. Various modifications of this form of construction are to be found in blowpipe work, and the same general principles may also be used in frequently occurring examples that are encountered in actual workshop practice. The drawings for this problem, which are to be made to a scale of 3 inches equals 1 foot, are to represent a cut-off for a 6-inch pipe, and the angle formed by the two branches of the **Y** may be taken as one of 90°.

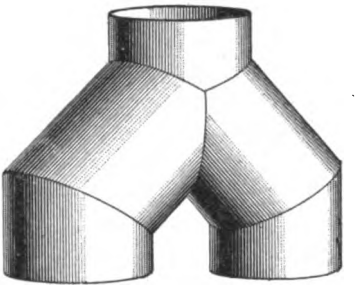

FIG. 39.

CONSTRUCTION.—An elevation of this object is first to be drawn, as shown in Fig. 40. Draw the vertical center line *A B*, and from a point situated on the upper part of this line, describe the semicircle at (*a*) that represents a half-full view of the upper end of the cut-off. From each extremity of its diameter, carry projectors vertically downwards, and represent the upper base of the cut-off by a horizontal line drawn between the two projectors at a convenient distance below the outline of the semicircle. Let it be assumed that a length of 2 inches will serve the purpose of the upper throat. From points located on the two projectors 2 inches below the upper base, draw lines at angles of 45° in the manner shown in Fig. 40. Make each of these oblique lines 6½ inches long, and at their outer extremities draw vertical lines toward the lower edge of the

Digitized by Google

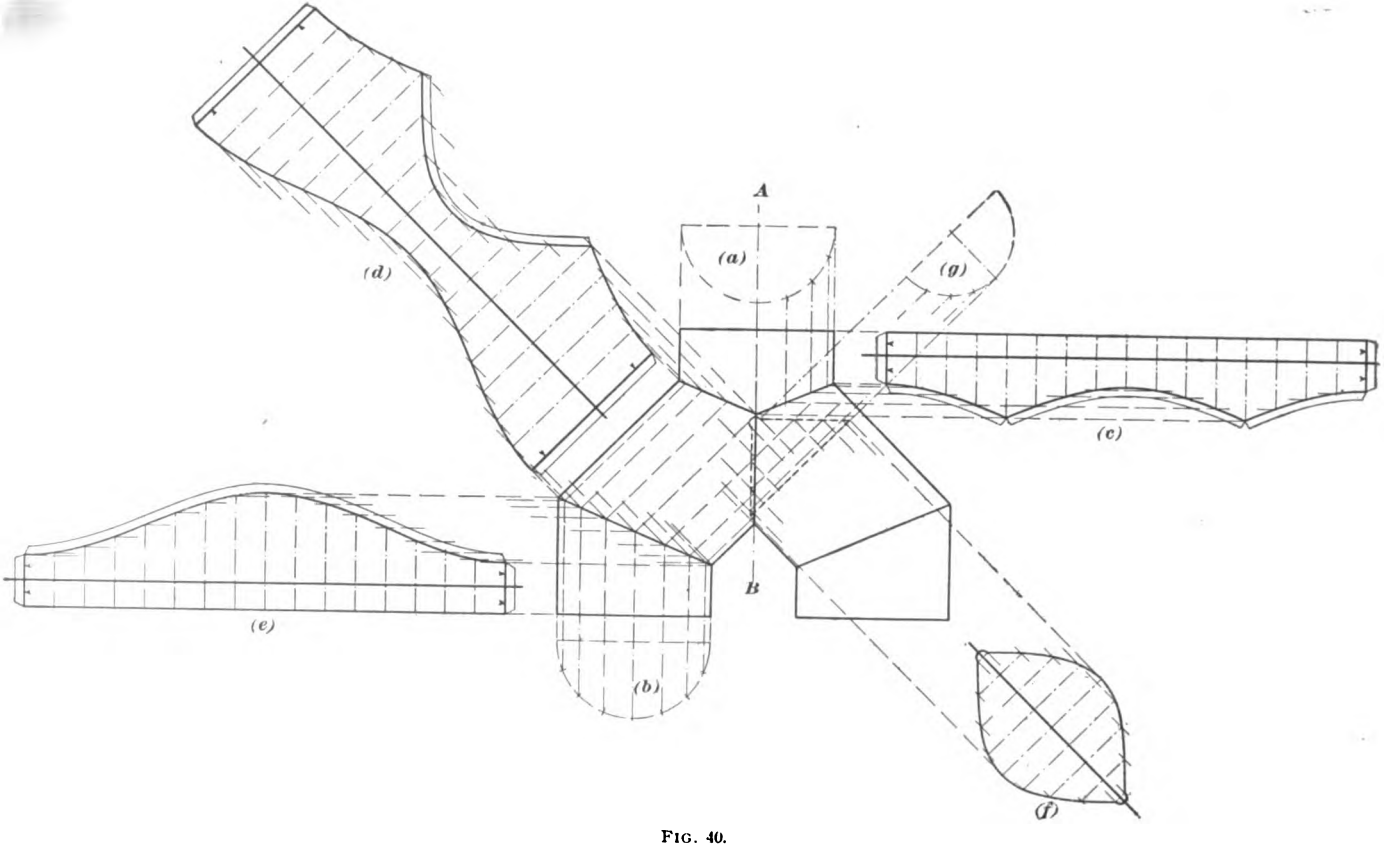


FIG. 40.

Digitized by Google

drawing. Draw lines parallel to the oblique lines previously drawn, and also lines parallel to the vertical lines in the lower part of the elevation, the perpendicular distance between the parallels in each case being 6 inches—the diameter of the intersecting pipes. Make the length of the lower throats the same as for the upper throat—2 inches. Each of the angles thus formed on the drawing is to be bisected in the manner shown, and it will then be seen that a portion of the center line is used for the line of intersection between the lower half of the branches for the Y.

In order to guard against error, a half-full view of the lower end of one of the branches may be drawn in the position shown at (*b*). The outlines of these end views are next divided by spacing in the usual manner, and the assumed edges are projected to the elevation, in order to facilitate the development of the surfaces of the different sections. The pattern for the upper section is laid off at (*c*) by aid of a stretchout developed in the customary manner. The development at (*d*) for the middle section is also made as previously described, and, if desired, the lower portion of the irregular outline may be used as the pattern for the lower section of the cut-off. As shown at (*e*), however, a separate pattern may be laid off, if desired by the student.

The pattern for the valve is shown at (*f*), and is developed from the part of the elevation shown by the dotted lines in the central portion of the figure. This valve is made of a piece of metal bent in the form of a semicircle, and, as shown in Fig. 40, is treated as being a segmental portion of a cylinder. It is usually arranged to turn on a center slightly below the top of the vertical intersection line. The full view of the central section of this piece is shown at (*g*) as a semicircle and may be described and spaced off in the usual way. The customary edges for laps and locks are to be added to the patterns at (*c*), (*d*), and (*e*). These are shown in Fig. 40 and having been fully described in preceding problems, need not be considered here.

Digitized by Google

PROBLEM 40.

**21. To develop the patterns of a head for an ash or garbage chute.**

EXPLANATION.—The construction of this problem affords another opportunity for exemplifying the method pursued in certain cases where the line of intersection is arbitrarily drawn. This method is often employed for the development of the surfaces of irregular forms, and if thoroughly understood by the student, will frequently assist him in situations apparently difficult. Ash-chute heads are made in styles dependent on the pleasure of the draftsman, and a design that might please one would perhaps not prove satisfactory to another.

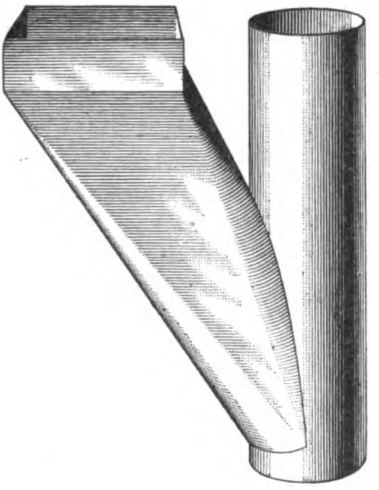

FIG. 41.

The main point to be observed in producing a design for one of these heads is to see that no obstructions are placed in the way of the contents; unnecessary elbows and angles are to be avoided, both for the reason previously stated and to save work in putting the head together in the shop. A chute head that answers these requirements is shown perspectively in Fig. 41. The body of this head can be constructed entirely of one piece of metal if desired, although in the large sizes in which garbage chutes are usually made, it may be preferred to use a larger number of pieces. For the drawings of this problem, which are to be made to a scale of 1½ inches to the foot, a diameter of 10 inches is taken for the main line of pipe; it is assumed also that a height of 35 inches is desired from the floor of the porch to which the chute is attached to the top of the chute head—

Digitized by Google

4 inches being the height of the receiver box, which is to be 12 inches wide by 14 inches long and 6 inches distant from the main pipe.

CONSTRUCTION.—The plan is first to be drawn in accordance with the dimensions previously stated. First, describe the circle that represents the end view of the main pipe, and then draw the rectangle that represents the plan view of the receiver box 12 inches by 14 inches in size. The circle should be distant 6 inches from the nearest side of the rectangle, and the horizontal center line should pass through the center of the circle and divide the rectangle into symmetrical halves. The remaining outlines in the plan may be omitted, since they are not needed for the construction of the patterns. Next, represent the outlines of the main pipe in the elevation, and draw also its vertical center line through both views. The next step is to draw the line of intersection in the elevation. Since it may be seen from the finished drawing in Fig. 42 that the irregular body of the chute head has a general resemblance to a cylinder, we may assume for the line of intersection a line that would be the true line of intersection if the intersecting body were actually a cylinder. On this supposition, the point *a* is fixed on the left-hand outline of the upright pipe, and 31 inches above the point *a*, the point *b* is located on the same line. From the point *b* draw a horizontal toward the left, and project from the plan the outlines of the rectangular box, thus fixing the position of the upper base of the body of the chute head. From *d* at the left extremity of the line drawn from the point *b*, an oblique line is now drawn to the point *a*; bisect the angle whose vertex is at *a* and draw the bisector *a o*, as shown in Fig. 42. The remaining outline for the body of the head may now be drawn in the elevation. From the point *c* fixed at will as the intersection of this outline with that of the upright pipe, the remaining portion of the intersection line is next drawn to the point *o*. The problem now resolves itself into the development of the surface of an irregular solid whose upper base is the rectangle shown in the plan and whose lower

Digitized by Google

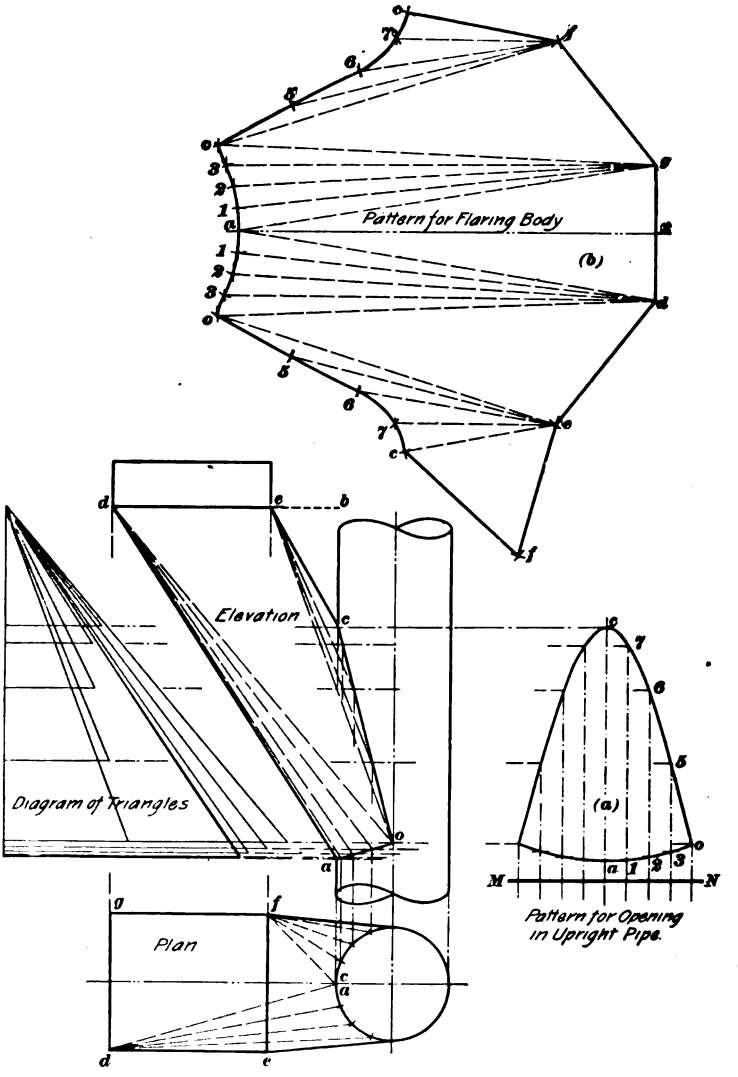


FIG. 42.

Digitized by Google

base is represented in the elevation by the line of intersection *a o c*.

In order to obtain the true distances around the lower base, and at the same time to obtain the pattern for the opening that must be cut in the straight pipe, the development at (*a*) is first drawn. As may be seen from Fig. 42, this drawing is made in the usual way; that is, the outline of the upright pipe in the plan is first divided by spacing, the stretchout *M N* is then developed, and after projecting the points from the plan to their correct positions on the line of intersection, developers are carried in the customary way to the drawing at (*a*). From this drawing, the correct measurements between the points on the outline of the lower base of the irregular solid may be taken when needed.

It will be seen from an examination of Fig. 42 that the horizontal center line in the plan divides the figure into symmetrical halves, and also that if lines are drawn from the point *o* in the elevation to the points *d* and *e*, the plane triangle *d e o* will be defined. In like manner, plane triangles will be outlined in the plan, if lines are drawn from the four corners of the rectangle to the point on the outline of the pipe that corresponds to the points *c* and *a* of the elevation. These triangles are represented in the plan and elevation in Fig. 42 as foreshortened, but may readily be constructed in their full size in the pattern from measurements taken from the drawings in Fig. 42. Aside from these plane triangles, the remaining surface of the irregular solid may be considered as being made up of portions of the surfaces of scalene cones whose respective vertices are at the four corners of the rectangle, and whose bases are represented in the drawing by the lines *a o* and *o c*. Since the true distances between the different points on these lines may be taken from the drawing at (*a*), the only work that remains for the student is to represent the elements of these scalene cones in the elevation and the plan and to find their true lengths by means of the usual method of constructing a diagram of triangles. From Fig. 42 it is apparent that these lines have been drawn in the elevation

Digitized by Google

as mentioned, and that in the plan those lines drawn to the point *e* are shown *above* the horizontal center line at *f*; while those lines that are represented in the elevation as radiating from the point *d* are shown in the plan *below* the horizontal center line. This obviates the confusion that would result if both sets of lines were represented in a single half of the plan. The true lengths of these lines are next determined by the aid of the diagram of triangles shown at the left of the elevation; this process needs no explanation, since it is precisely similar to the method shown in preceding problems.

Everything now being in readiness for the development of the pattern, the line *a x* at (*b*) is laid off in the same length as *a d* of the elevation. A perpendicular to this line is next drawn through the point *x*, and this perpendicular is made the same length as the side *d g* of the rectangle. With the points *d* and *g* at (*b*) as centers and with radii respectively equivalent to the lengths of the different elements of the scalene cones whose vertexes are at *d* and *g* of the plan, a series of arcs is next described in the manner shown in Fig. 42. Next, the dividers are set to the distance *a 1* at (*a*), and with *a* at (*b*) as a center, the points *1* are located on both sides of the horizontal center line; the distances *1–2*, *2–3*, and *3 o* are in like manner taken from the drawing at (*a*) and set off on the successive arcs at (*b*). When the points *o* have been reached at (*b*), the plane triangles *d o e* and *g o f* are constructed as follows: The distance *d e* is taken in the dividers from the elevation, and with the points *d* and *g* at (*b*), respectively, as centers, arcs of indefinite length are described. These arcs are then intersected by arcs described from the points *o* as centers, the radii being equal to the true length of the line *o e* of the elevation. Next, with the points *e* and *f* at (*b*) as centers and with radii respectively equivalent to the true lengths of the different elements of the scalene cones whose vertexes are at *e* and *f* of the plan (as determined by the aid of the diagram of triangles), arcs are described in the same manner as from the points *d* and *g*. The distances *o 5*, *5–6*, *6–7*, and *7 e* are then taken

Digitized by Google

successively from the drawing at (*a*) and set off as shown in the pattern at (*b*). The remaining plane triangle *e f c* is then added as shown in Fig. 42, and the outlines of the pattern are traced through the points that have been located. Edges are next allowed for locks and laps, and the upright sides of the receiver box may, if desired, be added to three of the upper edges—the remaining side being formed of a separate piece of metal.

---

## DRAWING PLATE, TITLE: EXAMINATION PLATE II.

**22.** This examination plate is to contain the patterns for the several fittings required in the erection of a blast system for removing dust from the three polishing lathes shown in Fig. 43. An example is here afforded for the student to put his practical efficiency to the test. It may be

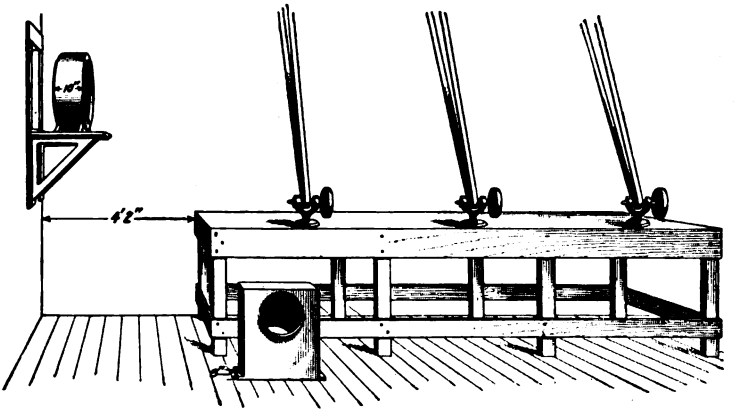


FIG. 43.

stated that in the construction of the patterns, no principles are employed other than those used in problems already given. In the shops of nearly all manufacturing jewelers, machines for polishing, as well as others that are liable to remove chips of the precious metals, are connected with blast



Digitized by Google

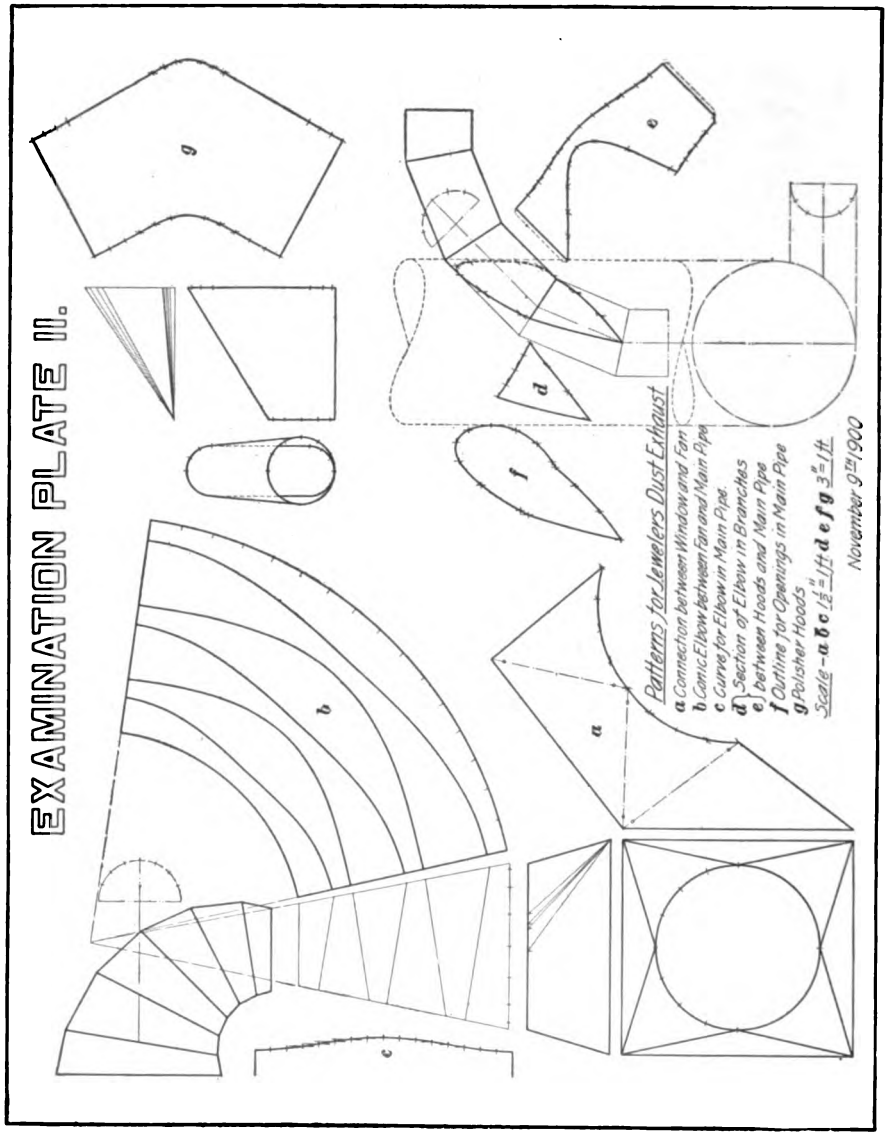


Digitized by Google

hoods and a main pipe through which a strong current of air is drawn from the machines. At some point in the main pipe, usually near the fan, a cleaner is placed that serves to remove and retain the small particles of metal. This cleaner is so made as to be readily accessible, and at frequent intervals is taken apart and the contents after removal are first burned and then smelted; in this way, most of the metal is recovered and the machines are kept in constant use without danger of wasting the material worked.

The cleaner is usually of cast iron fitted with inlet and outlet collars to which the metal worker connects his pipes; the cleaner to be used in this case is shown in Fig. 43 on the

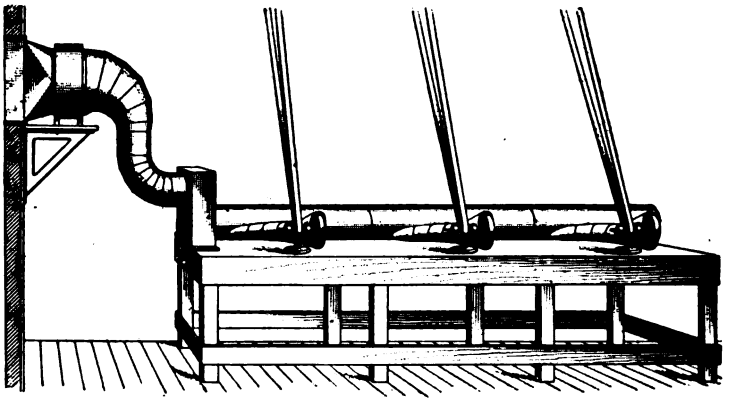

FIG. 44.

floor in front of the work bench. The inlet and outlet collars are both of the same size—10 inches in diameter—the size to be used for the diameter of the main blast pipe. The upper edge of the inlet collar and the lower edge of the outlet collar are in the same horizontal line, and the width of the cleaner being shown by the dimension figure in the illustration, the student may, when obtaining his measurements for the pipes, make the necessary allowance for the room occupied on the work bench by the cleaner. The cleaner is to be so placed on the bench that its outer edge will coincide with the edge of the work bench. The inlet collar, as may be

Digitized by Google

seen from the illustration, is at the lowest possible point, and the main blast pipe will therefore lie directly on top of the bench. The branches from the main are to be 4 inches in diameter and are to be formed of five-pieced elbows that also lie directly on the work bench; the throats of these elbows are to be constructed in such a manner that they will be tangent to a circle 24 inches in diameter. The elbows are then to be connected to receiver hoods of the form shown in Fig. 44, the dimensions at the outer base, or opening of these hoods being 3 inches by 9 inches. The outline of this base may be described as rectangular, with rounded, or semicircular, ends—substantially as shown in Fig. 44. The horizontal length of the hoods is 8 inches and the lower side lies flat on the bench; in other words, the lower edges of the main pipe, of the branch elbows and pipes, and of the hoods are in the same plane.

**23.** A fan having inlet and outlet collars 20 inches in diameter is to furnish the blast for this system of piping and is shown in Fig. 43; it is to be placed on a shelf erected under the stool of the window shown in the upper left-hand portion of the illustration. When in its final position, the fan is to be 10 inches from the face of the window casing, and the position of the shelf is such that a horizontal line that passes through the center of the window will pass also through the center of the axis of the fan. The window opening is in the form of a rectangle 24 inches in height and 26 inches in width. Thus it will be seen that a transition piece will be required to connect the window opening with the opening at one end of the fan, and that, in an elevation of this transition piece, the centers of both bases will coincide on the drawing. The inner opening of the fan—that is, the opening nearest the work bench when the fan is in position—is to be connected by means of a conic elbow, made in six pieces, to the main pipe, which, as stated before, is 10 inches in diameter. The main pipe is thence carried vertically downwards and is connected by means of a six-pieced elbow with the cleaner.

Digitized by Google

The width of the fan and the distance of the work bench from the side wall are shown by dimension figures in Fig. 43. The turn in the conic elbow should be made as short as possible, and the remaining horizontal distance is to be wholly taken up by the turn of the elbow at the lower end of the upright main pipe.

In accordance with the foregoing specifications, seven developments are to be made on the examination plate. The drawing is also to include the necessary projections, and the patterns are to be designated by numbers to be referred to by neat lettering near the lower margin of the drawing plate. The patterns required are:

(*a*) Connection between window and fan.
(*b*) Conic elbow between fan and main pipe.
(*c*) Curve for elbow in main pipe.
(*d*) } Sections of elbow in branches between hoods and
(*e*) } main pipe.
(*f*) Outline for openings in main pipe.
(*g*) Pattern for polisher hoods.

The first three drawings are to be made to a scale of $1\frac{1}{2}$ inches to the foot, and the remaining drawings are to be made to a scale twice as great as those first mentioned, that is, 3 inches to the foot.

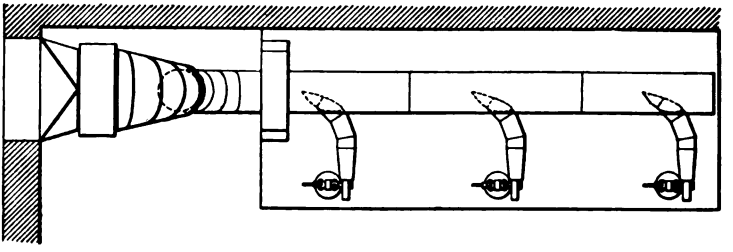

FIG. 45.

It will thus be seen that if the drawings to be shown on the examination plate were to be constructed in full size, they would serve as a complete set of patterns for the actual construction of the work called for by the foregoing specifications. Inasmuch as the work shown is an example of

Digitized by Google

that commonly required of a pattern draftsman employed by a firm erecting blowpipes, the practice gained by the student will be of very great value.

As an aid to the student, the completed fittings as finally erected are shown in Fig. 44, while a plan view of the construction is given in Fig. 45. There is shown also a reduced facsimile of the drawing plate, and by a study of it, the general arrangement of the different views and the accompanying patterns will be evident. The reduced copy of the plate does not show the construction lines; but the student is to leave all construction lines on the examination plate sent to the Schools for correction.

Digitized by Google

# PRACTICAL PATTERN PROBLEMS.

(PART 3.)

## INTRODUCTION TO PROBLEMS.

**1.** The problems contained in this section relate especially to those forms encountered by the boilermaker, the coppersmith, and by other workers in the heavier gauges of sheet metal. When the patterns for such work are developed, it is highly important that suitable allowances be made for extra thicknesses of stock. This subject has been described in a former article, and it has been shown that the means used by the draftsman in providing for these allowances vary with the form of the solid and with the material. It is deemed advisable in this section to present in detail several constructions, in order that the student may have an opportunity to study the application of principles when modified to suit different requirements. Too much stress cannot be laid on this important feature of the patterncutter's training; for no matter how accurately a pattern may have been developed, if the draftsman has made an incorrect allowance for thickness of stock or has failed to distribute properly such additional material, the result may be as far from correct as though the development had been wrong. That the student may fully understand the drawings, he should carefully follow out the details of each construction. The preliminary instruction in *Practical Pattern Problems*, Parts 1 and 2, applies, also, to the problems of this section. The different constructions are to be studied in



For notice of the copyright, see page immediately following the title page.

Digitized by Google

the same manner as heretofore, for unless the student obtains the practice afforded by these problems, he will experience difficulty with the examination plate.

**2.** Attention has already been called to the importance of determining, in any view, the correct lines of intersection between the different solids, or portions of solids, that may be represented. The methods used in finding these lines for the several varieties of solids have already been explained and need not be considered here; the subject is referred to at this time only for the purpose of directing the student's attention to a method frequently used by designers and others in working out the general features of a construction without paying particular attention to the minor details of a drawing. They frequently represent the lines of intersection between solids by lines drawn approximately—either by freehand methods or by straight lines or angles. This practice answers all purposes of the designer if it enables him to locate the principal points of his construction, but it frequently misleads the inexperienced patterncutter, who, perhaps, thinks that a line shown on a blueprint or a tracing is necessarily correct.

No patterncutter should proceed with his developments from projection drawings that have been made by another, unless he is positive that the lines of intersection have been correctly drawn. This he may sometimes determine by the form of the solids represented, together with the general characteristics of the drawing. On all drawings in which the entire process of finding these lines is not shown, he should reconstruct the projection from the beginning, and work out the entire solution of the line of intersection by a method known to be correct. When the student begins the examination of a drawing, he should first determine the general shapes of the different solids represented—that is, imagine them in the positions called for by the projection drawing—and secondly, form a correct idea of the appearance of their intersecting lines. The student will be assisted in the latter proceeding by his knowledge of the

Digitized by Google

general characteristics of the solids that he has already represented, and should endeavor to remember, as far as possible, exactly what are the effects produced when irregular solids are encountered. In this way his imagination will be greatly assisted, and with experience will come a ready facility in meeting new conditions.

## GROUP III: PATTERNS FOR ARTICLES IN HEAVY SHEET METAL.

### PROBLEM 41.

**3. To develop the patterns of a steam dome for a boiler.**

EXPLANATION.—From the perspective illustration given in Fig. 1, the student will see at once that this problem involves nothing more than the development of intersecting cylinders. Were it not that the material is of unusual

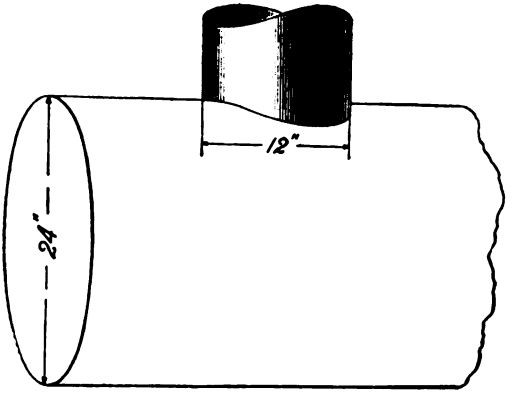


FIG. 1.

thickness, no work would be required of the draftsman other than that shown in former problems of a similar nature. The diameters of the two cylinders are shown by the dimension figures in the illustration, and for the purpose of

Digitized by Google

exemplifying the method of making the allowances, it may be assumed that the material is boiler plate $\frac{3}{8}$ inch thick. Two patterns are required; the first for the sides of the steam dome and the other for the opening in the top of the boiler to admit the dome.

CONSTRUCTION.—There are several ways in which allowances for thickness of material in cylindrical shapes may be made. One is the method by calculation; that is, having given the diameter of the cylinder and the thickness of the stock, it is possible to obtain the exact circumference—either from the table of Circumferences or by multiplying the diameter by 3.1416—and to add to this length such amount as may be necessary for the thickness of material. The total distance thus obtained is then laid off for the stretchout, which is then divided by spacing into the same number of equal parts as make up the outline of the circumference. Through the points thus obtained on the stretchout, edge lines are drawn and the pattern is completed in the manner already shown. Another method of making these allowances, and one that may be recommended for general use in the development of irregular forms, consists in using the principle already applied in the proportional division of lines. How this principle serves here will be clearly shown during the construction of the required patterns. Draw the plan and the elevation of the boiler section shown in Fig. 1 in accordance with the dimension figures there given; the scale of these drawings is $1\frac{1}{2}$ inches to the foot, and the arrangement of the views is to be that shown in Fig. 2. Next, divide the outline of the steam dome in the plan into a convenient number of equal parts, and thence project the assumed edges to the elevation. Along the line $A\,B$ at ($a$), lay off the stretchout for the dome, and in a similar manner, along the line $D\,E$ at ($b$), develop the stretchout for the segmental portion of the boiler sheet. It may be assumed that a distance equivalent to seven times the thickness of the material used is to be added to the stretchout; therefore, make $B\,x$ at ($a$) equal to seven times $\frac{3}{8}$ inch, or $2\frac{5}{8}$ inches. With the compasses set to a radius

Digitized by Google

equal to $A\,x$ and with the point $A$ as a center, describe a short arc from $x$ in the manner shown. Erect perpendiculars to $A\,B$ at each of the points located on that line, and fix the point $C$ on the perpendicular drawn from $B$ at the

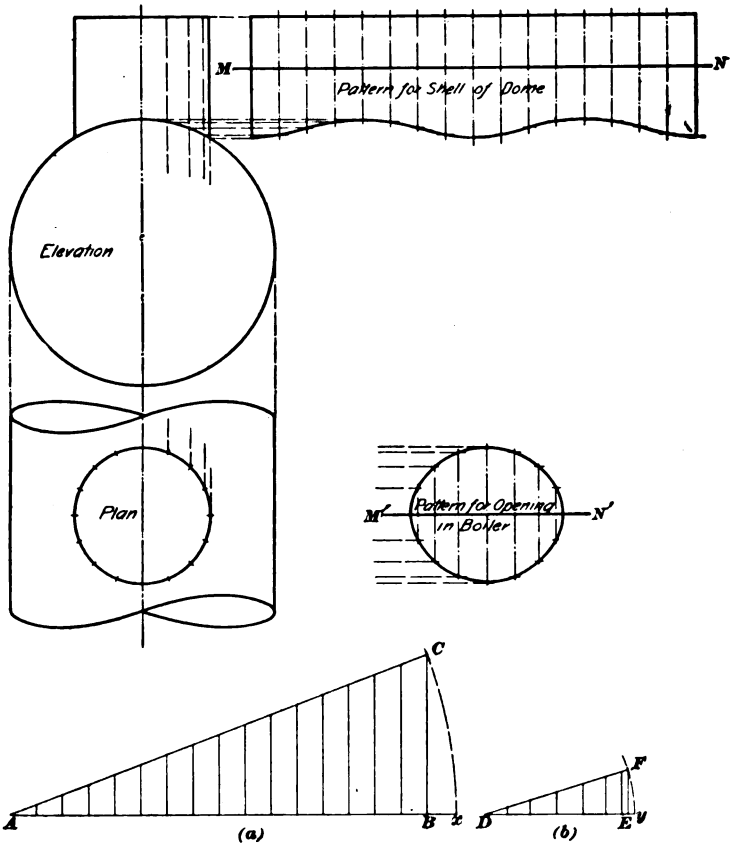


FIG. 2.

intersection of the arc. Draw $A\,C$, which will be the required stretchout for the dome; this line may now be reproduced, together with its subdivisions, at $M\,N$ in the position required for the development of the pattern. The remainder of this portion of the drawing is completed in the usual way.

Digitized by Google

Before the stretchout for the opening in the main boiler shell can be developed, it is necessary to ascertain what fractional part of the entire circumference of the shell is taken up by the opening. This may be determined from the elevation, and in this case it will be found that the dome intersects about one-sixth of the entire circumference. It is therefore necessary to allow but one-sixth of the entire amount that would be required if the whole circumference were to be laid off on the stretchout. Hence, the line $D\,E$ is laid off at ($b$) in accordance with the spaces shown in the elevation, and the distance $E\,y$ is made equal to one-sixth of $2\frac{5}{8}$ inches, or $\frac{7}{16}$ inch. The same method is then pursued at ($b$) as has been described for the drawing at ($a$), and the length of the stretchout $M'\,N'$, together with its subdivisions, is made equivalent to the line $D\,F$. The remaining portion of the operation is the same as in former cases of a similar nature, and needs no further description.

---

PROBLEM 42.

**4. To develop the pattern of a slope sheet for a boiler when the horizontal diameter of the boiler section is the same as that of the firebox section.**

EXPLANATION.—The style of boiler to which reference is made in the above description is shown perspectively in Fig. 3. This problem is really that of producing the pattern for a transition piece between segmental sections of a cylinder in which the miter line is arbitrarily drawn. In this case, the two miter lines, or the two bases of the transition piece, are parallel, thus making the sections of the connecting cylinders equal. Problems

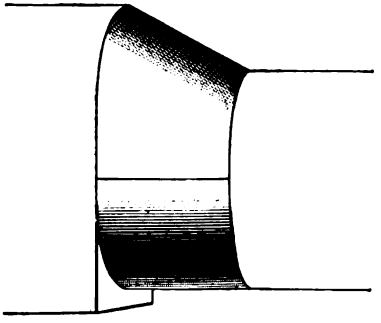

FIG. 3.

Digitized by Google

of this nature frequently arise in the blowpipe fitter's experience—especially where there is a limited amount of room, and where the correct line of intersection, if used, would place portions of the fitting in inconvenient places. The two bases of the transition piece being fixed, it is first necessary to determine a section at right angles to its parallel lines; the correct spaces to be set off on the stretchout may be taken from this view, and the remainder of the development will then consist merely in applying the methods usual for this class of solids. In this case, another allowance becomes necessary, because the material of the boiler is heavier than can be accurately accounted for in a purely theoretical development. As in the preceding problem, the diameter of the boiler shell may be taken as 24 inches and the drawings made to a scale of $1\frac{1}{2}$ inches to the foot.

CONSTRUCTION.—Draw the end and side elevations, as shown in Fig. 4, and give the slope sheet a pitch of 30° to the horizontal. Divide the end elevation into symmetrical halves by means of the vertical center line, and also divide the outline of one-half the upper semicircle in the end elevation into a convenient number of equal spaces—thus locating the points *a*, *b*, *c*, *d*, and *e*. Project these points to the side elevation and carry the assumed edges across the surface of the slope sheet parallel to its upper outline. For the purpose of constructing the desired sectional view of the slope sheet, these assumed edges may be produced indefinitely toward the right-hand side of the drawing. At any convenient place to the right of the right-hand intersection line, as at *w x*, draw a perpendicular to these assumed edge lines. Now, set off from the line *w x*, along the respective edge lines, distances similar to those shown by the horizontal dotted lines in the end elevation; that is, make *x a'* of the side elevation equal to the distance *o a* of the end elevation; *x' b'* of the side elevation equal to *o' b* of the end elevation, etc. The irregular curve traced through the points *a'*, *b'*, *c'*, etc. will define the outline for the section, and the distances between these points may then be set off along the stretchout. Before the stretchout can be

Digitized by Google

developed, however, allowance must be made for the thickness of material; this is done in the manner shown in the preceding problem. In any convenient place on the drawing, as at (*a*), draw a line of indefinite length, and on this line [*A B* at (*a*)] set off distances similar to those on the outline of the section. Assume a thickness of $\frac{3}{8}$ inch for material and that a total of seven times this amount is to

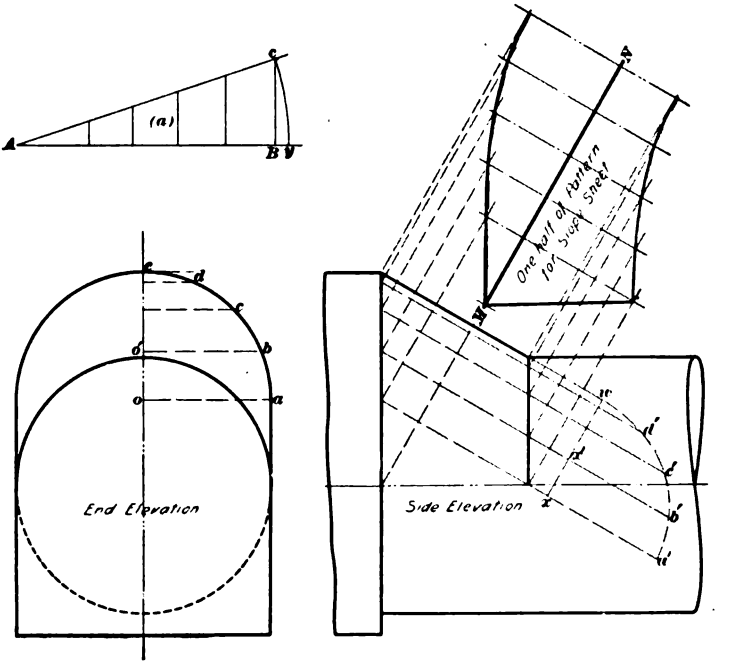


FIG. 4.

be added to the entire circumference. Since but one-half of the circumference is needed for the slope sheet, one-quarter of seven times $\frac{3}{8}$ inch, or $2\frac{1}{2}$ inch, is to be added in the distance from *B* to *y* at (*a*). The method previously described is then followed, and the result, shown by the line *A c* at (*a*), with its subdivisions, is set off in the required position, as shown by the stretchout *M N*. Edge

Digitized by Google

lines are then drawn for the pattern in the usual way, and the development is completed in the same manner as in former problems.

---

PROBLEM 43.

**5. To develop the pattern of a slope sheet for a boiler when the horizontal diameter of the boiler section is less than that of the firebox section.**

EXPLANATION.—The style of boiler shown in perspective in Fig. 5 is perhaps more common than the one described in the preceding problem; but the question of obtaining a pattern for its slope sheet is a more difficult one than in the case just described. The method to be shown of allowing for thickness will generally avail for such allowances in triangulation developments. This method is identical with that of preceding problems, but the manner in which the application is made to the drawing differs slightly from that already shown. For this reason the student should pay careful attention to the construction of this problem.

It will be assumed in this case that, while the diameter of the boiler section is the same as in the preceding problem, 24 inches, that of the firebox section beyond the throat sheet is 36 inches. This difference, although greater than will be found in actual experience, is used here because the process shows to better advantage where the angle of inclination is considerable. The top angle of the slope sheet and the length of the transition piece, as shown in the side elevation, are the same as

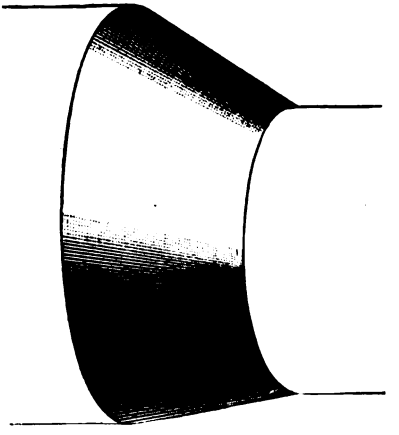

FIG. 5.

Digitized by Google

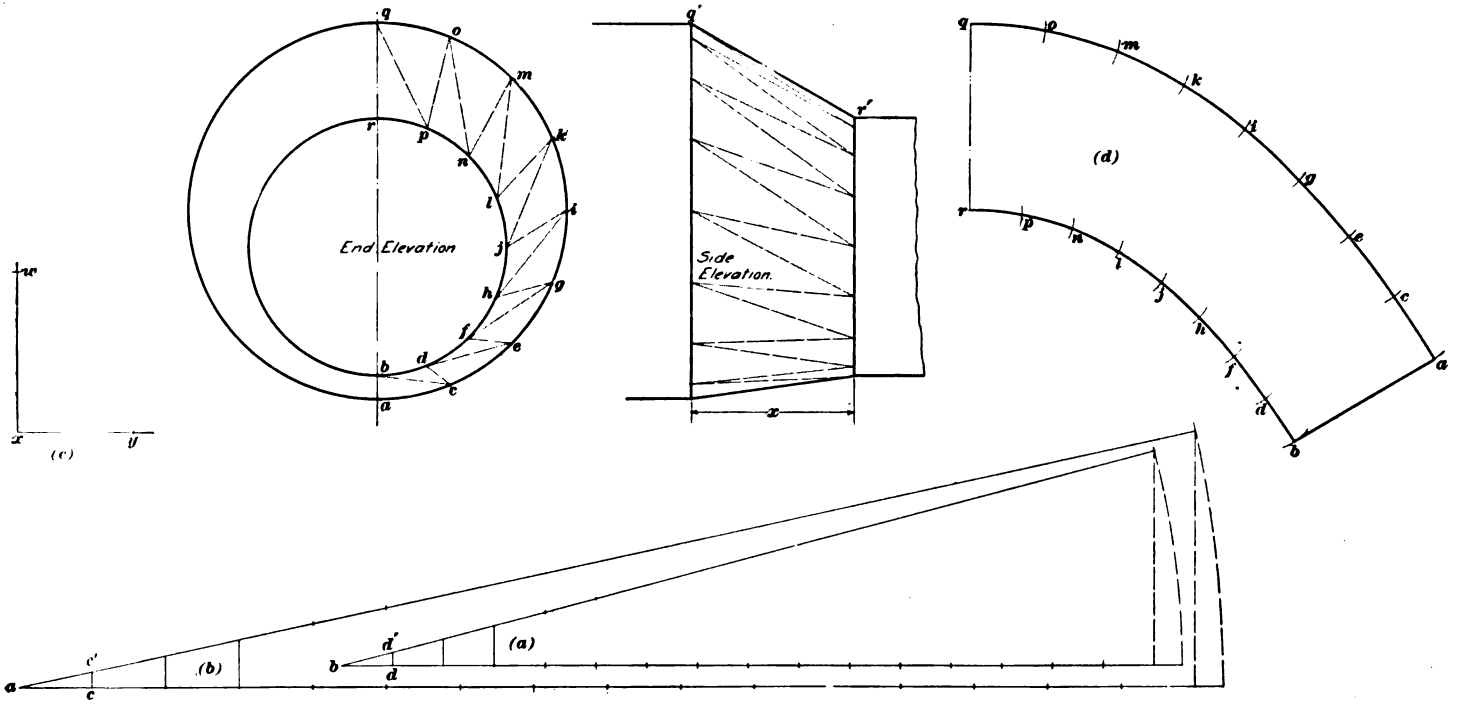


FIG. 6.

Digitized by Google

in Problem 42, and the drawings are to be constructed to the same scale, i. e., 1½ inches to the foot.

CONSTRUCTION.—Draw the end and the side elevation in accordance with the dimensions previously given, and give the different views the same relative position that they have in Fig. 6. In the end elevation, after drawing the vertical center line, divide the outline of each of the sections into the same number of equal parts and project the points thus located to the side elevation. Number or letter these points consecutively, as in Fig. 6, and draw lines between the successive points. After this work has been done, a temporary stretchout for each base is to be laid off, as shown at (*a*) and (*b*); the allowance for thickness is then made, as shown at the right of the stretchout lines, and, after erecting perpendiculars from the extreme right-hand points, the oblique lines are drawn from the arc intersections, respectively, to the points *b* at (*a*) and *a* at (*b*). Perpendiculars are then erected at the points *d* and *c*, and the distances *b d'* for the smaller base and *a c'* for the larger base are taken as the radii for the arcs in the pattern. The student may understand from this drawing that, since the original distances on the temporary stretchouts were each equal, it is necessary to determine the increased amount to be added for but one of the spaces; if the spaces on the temporary stretchout were unequal, as in the stretchout for the opening of the boiler sheet in Problem 41, the entire process there shown should be undertaken here. The true lengths of all foreshortened lines must now be determined by means of a diagram of triangles, and the completion of the pattern will differ in no material respect from drawings that have heretofore been explained. But, since the draftsman seldom constructs these triangles in the complete manner in which they have been illustrated in these problems, the student is here shown a method of simplifying the construction of triangulation problems. This method has the advantage of being considerably shorter than that previously explained, but it requires close attention on the part of the draftsman, and if he is called away from the drawing, or if his attention is



Digitized by Google

diverted, he may "lose his place"; and in that case, some of the work has to be gone over again.

Construct the right angle *w x y* at (*c*) and make the distance *w x* equal to the perpendicular width of the slope sheet; that is, equal to the distance *x*, as shown in the side elevation. This right angle is to serve for all the temporary triangles needed for the construction, but the drawing of each different hypotenuse is to be omitted. Just how this is done will be explained as the drawing progresses. In the view at (*d*), draw a vertical center line of indefinite length, and set off the distance *q r* on this line equivalent to the distance *q' r'* of the side elevation. From *q* as a center, with a radius *a c'* as taken from the drawing at (*b*), describe an arc of indefinite length; in a similar manner, and with a radius *b d'* taken from the drawing at (*a*), describe an arc from *r* at (*d*). Now, set the dividers to the distance *q p*, as shown in the end elevation, and, after setting one point of the dividers lightly on the point *x* at the vertex of the right angle at (*c*), set the other point of the instrument firmly on the horizontal line at the point *y*. With this point of the instrument firmly held on the point *y*, open the dividers by light pressure with the middle finger, until the free point of the instrument will reach exactly to the point *w*. The span of the dividers is thus equivalent to the length of the hypotenuse of the right-angled triangle *w x y*, although the hypotenuse is not shown by any line on the drawing. The dividers may now be lifted carefully over to the drawing at (*d*), and, after setting one point of the instrument at the point *q*, the point *p* may be fixed by a slight prick mark made on the arc described from *r*. Next, the distance *p o* may be transferred in a similar manner to the horizontal line at (*c*), and, the right-hand point of the instrument being held in its position on the horizontal line until the dividers are opened to reach the point *w*, the true length of the line *p o* may be ascertained and transferred to the pattern at (*d*) in a similar manner. This process is then continued until all the foreshortened lines shown in the elevation are transferred in their true

Digitized by Google

lengths to the pattern. If desired, the operation may be continued on both sides of the center line of the pattern and the entire development produced at once. Only one-half of the pattern is shown in Fig. 6, and since the piece to be developed is usually of such size that it is impractical to get it out of a single sheet of metal, it is generally preferable to lay out the pattern in the manner shown in the illustration. But a student should not attempt to ascertain the true lengths of lines by this method unless he is positive of his thorough mastery of the principles involved in triangulation developments and unless he is sure of no interruptions during the construction of the drawings. The plan here shown, while it is to be highly recommended on account of saving labor, requires close attention on the part of the draftsmen, since, in case of error, he is obliged to go over the entire work. As the student acquires proficiency in his work, however, this danger is materially lessened, and after a little practice he will easily avoid error in such constructions.

---

PROBLEM 44.

**6. To develop the pattern for a gusset plate between a boiler and a stack.**

EXPLANATION.—The gusset plates shown at *A* in the view of the boiler in Fig. 7 are intended to add lateral strength

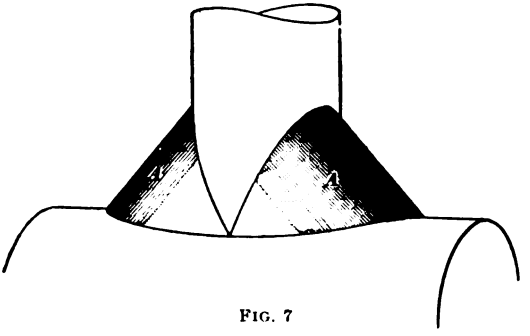


FIG. 7

to the stack and to prevent its weight from resting entirely

Digitized by Google

on a comparatively small space on the boiler sheet; in other words, to distribute the weight of the stack over a larger area. The development cannot be made until the lines of intersection have been correctly found. It should be remarked here that, if the student, after receiving a drawing of any complicated form, will first ascertain whether the lines of intersection are correct, he will often avoid trouble and vexation. The view in Fig. 7 shows the gusset plates on both sides of the stack, but since they are alike, a development for one side will suffice. The diameter of the boiler shell is the same as in the preceding problems—24 inches—and the diameter of the stack may be taken as 12 inches. The drawings are to be made to a scale of 1½ inches to the foot.

CONSTRUCTION.—Draw first the end elevation, as shown in Fig. 8, and then the side elevation of the boiler section and of the stack. Since the pattern for the stack intersection is required in shop practice, this line should be carefully worked out. This is accomplished by regular projection methods and is shown in Fig. 8. The student may omit the development of the pattern for the stack and for the opening in the boiler sheet, since this work is exactly the same as has been shown in Problem 41. The stack and the boiler, together with their line of intersection, having been drawn in the side elevation, the gusset plate may be represented as follows: With the 60° triangle draw $A\ B$ from the middle point of intersection shown in the side elevation, and from $B$ draw the line $B\ C$ with the 45° triangle. The irregularly curved intersection line $A\ C$ is then developed. The method of development is to draw vertical projectors from the end view of the stack at ($a$), producing them until they intersect the line $A\ B$; thence they are continued parallel to $B\ C$ and intersected in the lower portion of the drawing of the gusset plate by horizontal projectors drawn from the end elevation, in the manner shown in Fig. 8. To determine the stretchout for this pattern, a section at right angles to the parallel lines of the gusset plate must now be drawn. The assumed edges are

Digitized by Google

accordingly produced indefinitely toward the left side of the drawing, and at right angles to them the line $w\ x$ is drawn. The vertical distances above the horizontal center line are then taken from the view at $(a)$ and transferred in their proper places to the view at $(c)$; the irregular curve there shown is then traced through the points thus located. The required distances for the stretchout may now be taken from the outline of the curve at $(c)$, but before the stretchout is laid out in its proper position, allowance should

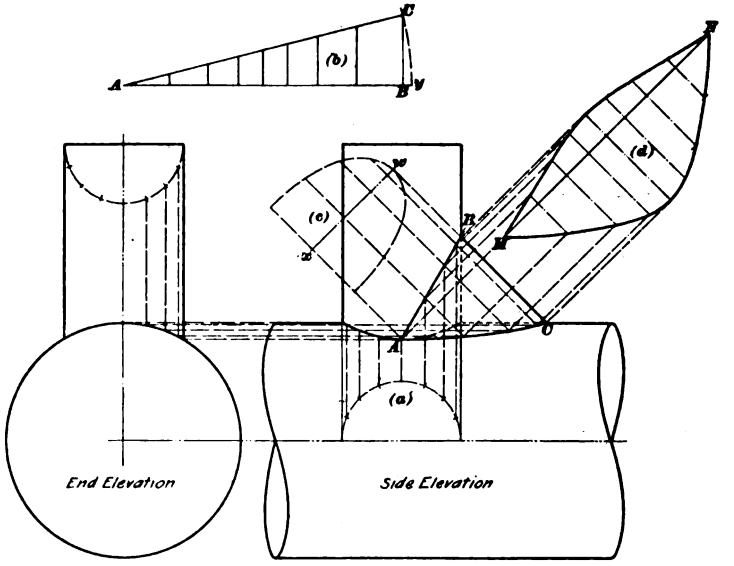


FIG. 8.

be made for thickness of material. Assuming, now, that the gusset plate is to be $\frac{1}{4}$ inch thick, it will be seen that an amount should be added to the stretchout of the pattern equivalent to that required by a semicircle, or $\frac{1}{2}$ of seven times $\frac{1}{4}$ inch, or $\frac{7}{8}$ inch. The theoretical stretchout $A\ B$ is developed in the usual way, as shown at $(b)$, and the distance $B\ y$ is set off as $\frac{7}{8}$ inch. By the method previously explained, the stretchout $A\ C$ is then developed and is copied in its proper position $M\ N$. Through its subdividing

Digitized by Google

points edge lines are next drawn, and developers are carried from the required points on the outline of the gusset plate. The resulting pattern at (*d*) will, therefore, be the required outline, and, if desired, edges may be added for riveting flanges.

---

**PROBLEM 45.**

**7. To develop the patterns of an ornamental cap for a smokestack.**

EXPLANATION.—The boilermaker is often called upon to provide the upper end of a stack with an ornamental finish. Modifications of the design shown in Fig. 9 are, perhaps, most commonly used, and may be observed in the finish applied to the top of locomotive smokestacks. It is usual to make this ornamental work independent of the stack proper; the ornamental shell is then slipped over the upper end of the stack and riveted in position. On this account, the metal used for the top may be somewhat lighter than that of the stack itself; the difficulties attending the hammering, or raising, of the curved form are, therefore, reduced somewhat; since lighter metal is more easily brought into proper shape than are the heavier gauges.

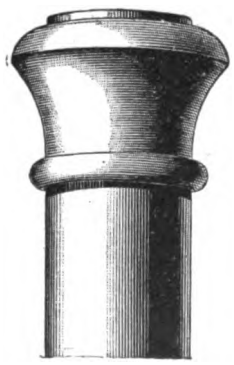

FIG. 9.

Assume that the stack is 12 inches in diameter and that the curve for the top member, shown in the side elevation, is described with a radius of 3 inches; for the large "cove" member, with a radius of 12 inches; and that the radius for the semicircular bead is 1½ inches. The drawings are to be made to a scale of 1½ inches to the foot.

CONSTRUCTION.—Draw the elevation, as shown in Fig. 10, in accordance with the dimensions given in the specifications,

Digitized by Google

and draw, also, the vertical center line, which is produced indefinitely both above and below the figure. A separate development of each member of the ornamental top is made, treating it as a frustum of a cone, in the

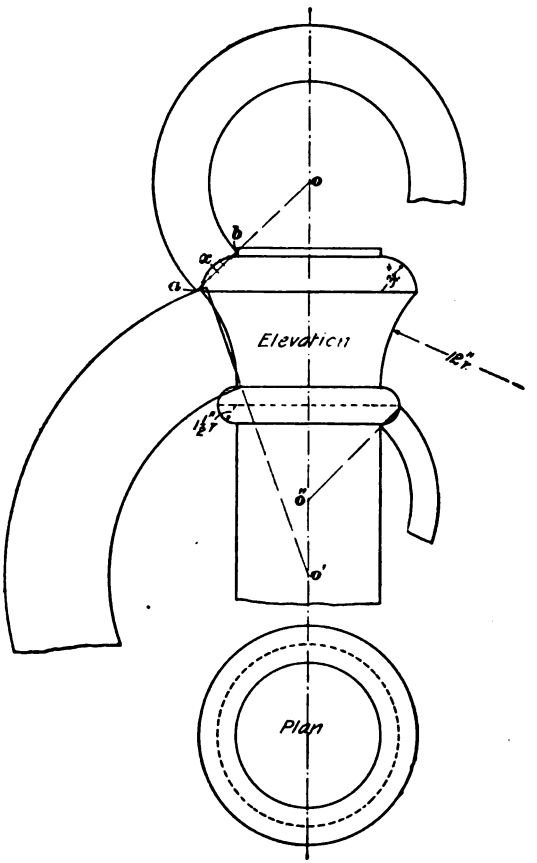


FIG. 10.

manner already explained for the zones of a sphere, or ball. The lines that determine the frustum are represented in Fig. 10 by the oblique lines that intersect the center line. The student will require some experience in "raising" the

Digitized by Google

different metals before he will be able to understand precisely where to draw these lines. Generally, however, the lines should be drawn in the direction indicated by the curved portion; that is, in a direction such that, if the curved outline were straightened out, the least amount of bending would cause it to assume the direction indicated by such oblique line. After this oblique line has been drawn, erect a perpendicular to the line from a point midway on the curved outline. Then space off the curved outline and lay off an equal number of similar distances on both sides of the perpendicular. That is, the oblique line for the development of the upper member having been drawn to the point *o* in Fig. 10, a perpendicular is erected from the point *x* situated at about the middle point of the curved line; the curved outline is then divided by spacing—three divisions being located above *x* and three below. These spaces are next set off on the oblique line—three above the perpendicular and three below—and from the outer points *a* and *b*, arcs that define the outline of the pattern are described from *o* as a center, in the manner shown. The length of stretchout is determined on the arc described from *a*, and is equal to the circumference of a circle described with a radius equivalent to the perpendicular distance from the point *a* to the vertical center line. The patterns for the remaining members of the ornamental top are obtained in a similar manner, as may be seen from Fig. 10; their respective centers are located at the points *o'* and *o''*, and the required radii are found in the manner already described. It should be noted that the pattern for the half-round bead is obtained in two pieces, and that in the finished bead a seam is to be found along the central line, as shown by the dotted line crossing the bead in Fig. 10.

---

PROBLEM 46.

**8. To develop the patterns for the ventilator known as an "Emerson" head.**

Digitized by Google

EXPLANATION.—No compilation of pattern problems would be complete without a description of this well-known ventilator, Fig. 11. Perhaps no other ventilator that is not proprietary is used so generally and for such a variety of purposes. It is employed with equal efficiency as a smoke jack and as a ventilator cap. Its proportions are varied somewhat in different localities, but it usually has the following dimensions: The distance *a*, Fig. 12, is one-half of the diameter of the opening, and *b* is one-quarter. The lower flange has an inclination of 45° and the outer diameter of the upper flange is the same as that of the lower; the angle of inclination for the flaring pieces of the upper flange is 30° to the horizontal. In the construction of smaller ventilators, the upper cone is frequently absent, but since it strengthens the upper flange, it is usually included in ventilators of a diameter larger than 24 inches.

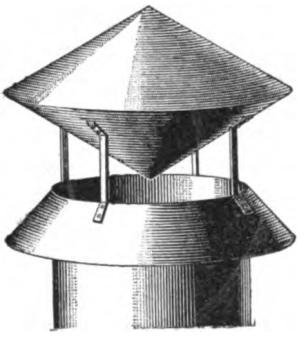

FIG. 11.

The drawings for this problem are to be made to a scale of 3 inches to the foot, and are to represent a ventilator 24 inches in diameter at the opening that is to be constructed in accordance with the foregoing specifications. The material is to be $\frac{1}{8}$ inch thick, for which allowances must be provided in the pattern.

CONSTRUCTION.—Draw the elevation, as shown in Fig. 12, and describe a circle in the plan that will represent the outer outline of the flanges. Since the upper flange is composed entirely of two cones, attached base to base, the development of their patterns needs no explanation. It may be stated, however, that in the development of entire surfaces of cones of heavy metal, the allowance made for cylinders is added to the stretchout for the cone. For a conic frustum, however, this allowance is made in a slightly different way, as will appear in the pattern for the lower flange. Two pieces similar to that shown at (*a*) will be

Digitized by Google

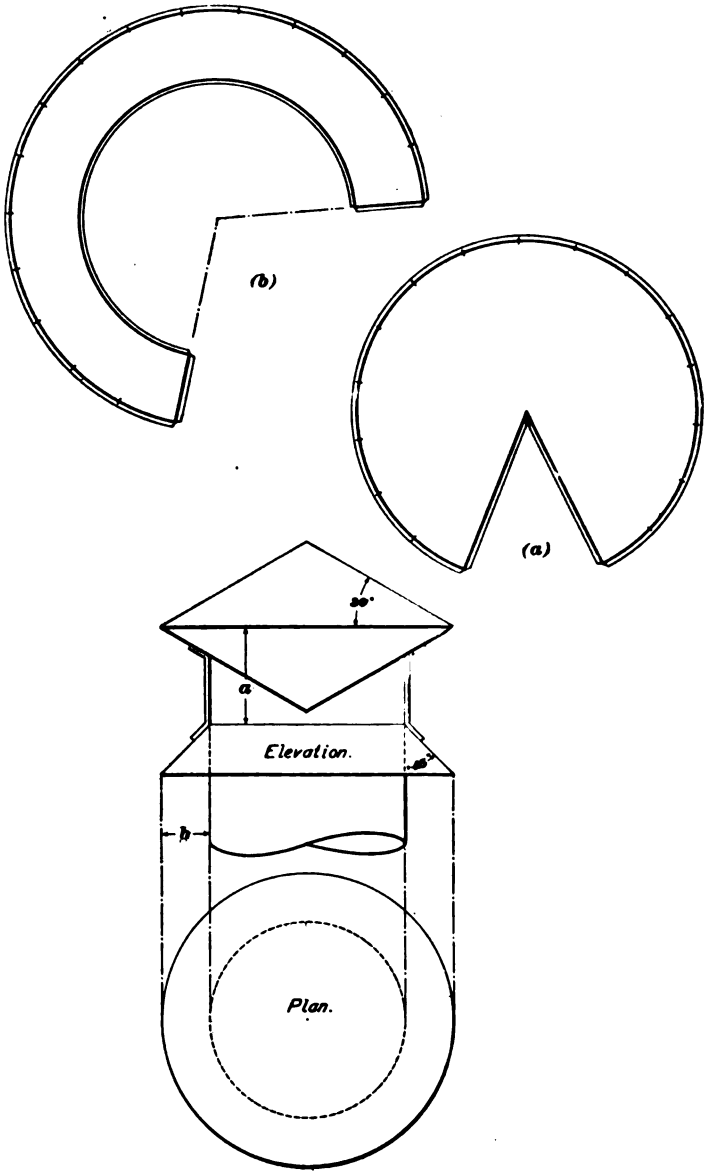


FIG. 12.

Digitized by Google

required for the upper flange, and to one of these pieces an edge should be added around its curved outline, for the purpose of turning over and holding securely the other cone. In the development of the pattern for the frustum that forms the lower flange, the allowance for thickness is to be added to both arcs; that is, the lines enclosing the addition will be parallel. This apparent discrepancy is due to the fact that when the entire surface of the cone is in one piece, the stretch of the metal during the bending operation is not the same as when only a portion of its surface is formed. For large ventilators it often happens that the upper cones must be divided in this manner and the surfaces of the cones made up of sections similar to those of frustums; when this occurs, it is necessary to follow the plan given for the lower flange. After laying out the patterns for the different flanges, it is important that the positions of the braces should be noted in the flat sheet, and such holes as are necessary may then be cut out before the work is formed up. The holes for the rivets in such work may be drilled or punched in the flat sheet, and they should be very carefully located.

---

PROBLEM 47.

**9. To develop the patterns of a transition piece between a horizontal rectangular opening and an upright cylindrical stack.**

EXPLANATION.—When stacks of large diameter are made of boiler plate, it frequently becomes necessary, on account of their great weight, to provide a foundation for them independent of the boiler. For such cases, a transition piece must be provided. The sheet-metal worker must form this transition piece so that an unobstructed flow of air may be obtained between the boiler and the stack. An example of such a case is shown in Fig. 13. The upright stack is shown already erected, and for the purposes of this problem its diameter is assumed to be 16 inches. The

Digitized by Google

perpendicular distance from the stack to the opening is 6 inches, while the rectangular opening is 10 inches by 20 inches. The relative position of the stack and the opening is such that a horizontal center line drawn through the plan will pass through the centers of both the rectangle and the circle. The top and the under side of the transition piece are given inclinations of 60°, as shown in a side elevation, and the opening in the stack must have an area equal to that of the horizontal opening. The drawings are made to a scale of 1½ inches to the foot.

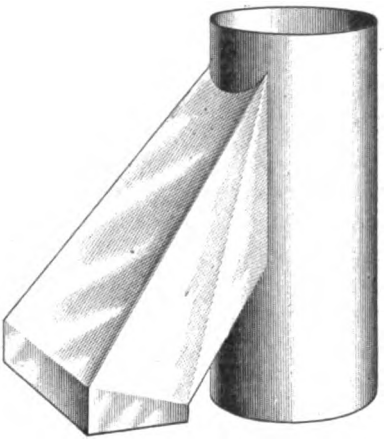

FIG. 13.

CONSTRUCTION.—Draw the plan first; in this view, Fig. 14, after representing the rectangle and the circle, equidistant parallels are to be drawn both above and below the center line, and at a distance from that line equal to one-half the width of the horizontal opening. The intersections of these parallels with the outline of the circle at the points *a* and *a'* will thus represent, when projected to the elevation, the lines along which the cut is to be made in the stack. A projector is, therefore, to be carried indefinitely into the elevation from the point *a*, as shown in Fig. 14. Also, project the elevation of the stack and draw the horizontal line *e f* to represent the edge of the opening, as shown. From *f* to *b* in the elevation, a short distance is measured off to provide a lap for the transition piece when it is fitted to the flange of the opening, and from the point *b* an oblique line at the given angle is carried upwards until it intersects the projector drawn from *a*. The outer angle at *b* is next bisected, and the bisector produced until it intersects a vertical line drawn from the point *e*. Another oblique line parallel to the one first drawn is then carried from the

Digitized by Google

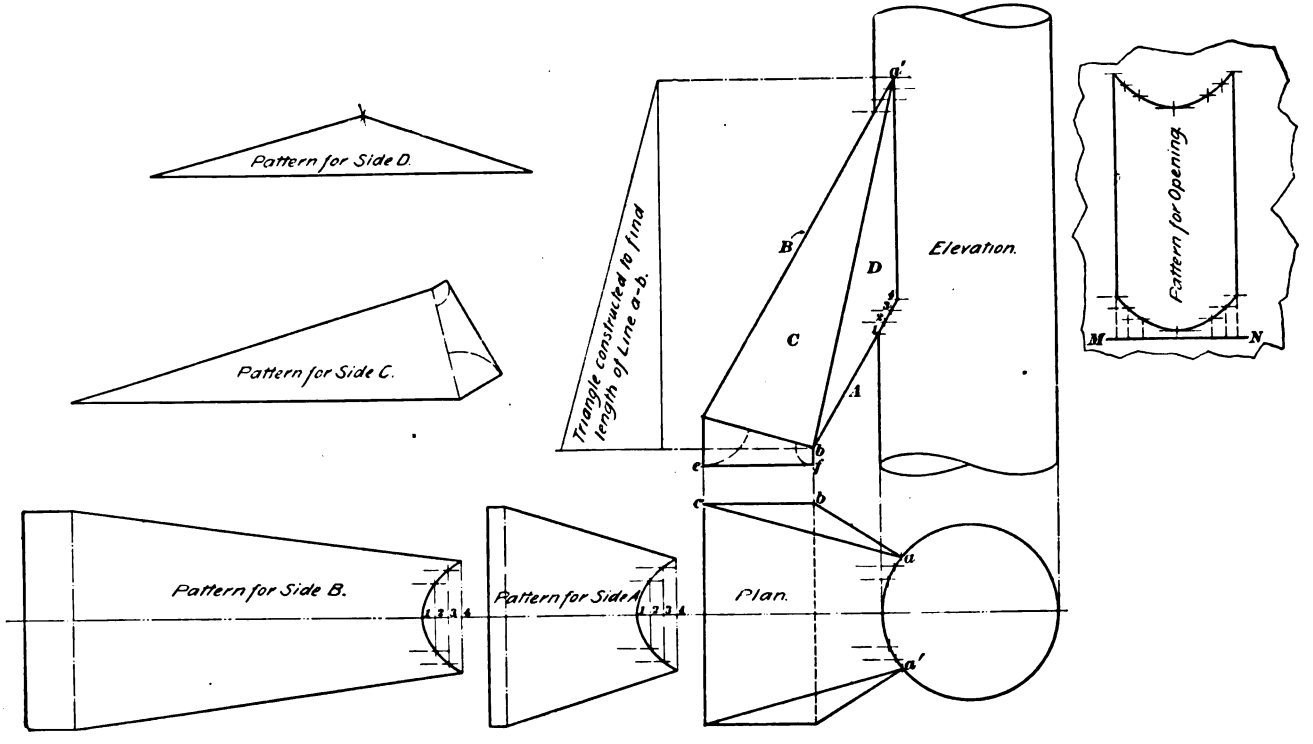


FIG. 14.

Digitized by Google

left-hand point of intersection up to its intersection with the projector from *a* at *a'* in the elevation. The drawing now shows that the surface represented in the elevation is not a plane surface, since its bounding lines are not in the same plane; if, however, a line be drawn from *b* to *a'*, two surfaces will be defined, each of which will be a plane, or flat, surface, and, therefore, easy of development. This problem is especially to be noted as one that requires the exercise of the mental faculty called *imagination*—a faculty on which the student must depend to extricate himself from difficulties that attend the development of such forms as are here shown. The completion of the drawing and the development of the different surfaces of the transition piece are now comparatively easy and should give the student no trouble.

It is necessary, of course, to cut out the pieces that form the upper and lower sides of the transition piece so that they will accurately fit the sides of the stack. The student has a choice of two methods of spacing for this development: he may either divide a certain portion of the oblique line from *b* into equal spaces and project the points thus located to the plan; or he may locate the equal spaces on the outline of the circle in the plan and then project those points to the elevation. The former of these methods has been used in Fig. 14, although it may be stated that there is little choice between the two, and the student may use either at his discretion. The development of the patterns for the upper and lower sides of the transition piece may be conveniently made along the horizontal center line of the plan, and then the true lengths of the sides for the remaining pieces may be ascertained from the projections. The pattern for the outline of the opening to be cut in the stack may also be laid off, as shown in Fig. 14. As explained earlier in the Course, such allowances as may be necessary on account of thickness of material are to be made before the pattern is transferred to the metal. Since these matters have already been discussed at some length, no further description of them is necessary.

Digitized by Google

PROBLEM 48.

**10. To develop the patterns of an irregular elbow in a rectangular pipe.**

EXPLANATION. — One of the principles applied to the arrangement of plane surfaces in the preceding problem is of frequent service to the draftsman when he is called on to lay out rectangular pipework. Much of the work now required in the construction of blast systems for heating large buildings is of this order. In such work, an important feature consists in so constructing the pipes as to obtain an unimpeded flow of air. This cannot be accomplished if the areas of the pipes are anywhere reduced. In order that the student may understand exactly what is meant by this, he is referred to Fig. 15 for an examination of the double elbows there shown. Note that in the construction at (*a*), the miter lines, or the lines of intersection between the different

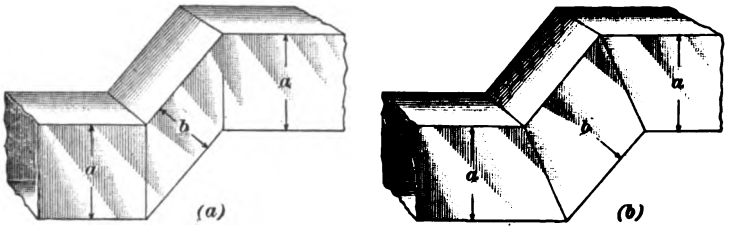


FIG. 15.

sections of the elbow, are not drawn in accordance with the methods hitherto explained; that is, the angles between the outer outlines have not been bisected, as in the elbow shown at (*b*), and the result is that the middle section of the elbow has a smaller cross-section than have the two end sections. If work is constructed in accordance with the elbow shown at (*a*), it is evident that when the capacity of the connecting pipes is fully taxed, there will not be a free discharge of air at the opening, for it is a well-known principle that governs the flow both of liquids and gases that the discharge of any line of piping in a given time will be only so much as will flow through the smallest opening in that line. It is

Digitized by Google

important, therefore, that there be no such contraction in any portion of its entire length, and to accomplish the best results, the elbows and turns that are necessary must be made in accordance with established rules. In such work the draftsman must rely on his judgment and must be alert to detect errors that are sure to arise if he does not exercise his imaginative powers to their fullest extent. The classes of work with which he is required to deal are so varied that no general rules can be given, but after a little practice, he will be able to avoid such errors of construction, and will be able to plan his work in accordance with the desired results. An example of this sort is shown perspectively in Fig. 16. A square turn must here be made in a rectangular pipe, and in such a position that the lateral dimensions are reversed. The most important feature of the work consists in making the projection drawings, and especial attention is therefore directed to their construction. The cross-section of the pipe is a rectangle 12 inches by 16 inches, and a perpendicular distance of 8 inches each way is allowed, as explained in the following construction. The drawings are made to a scale of 1½ inches to the foot.

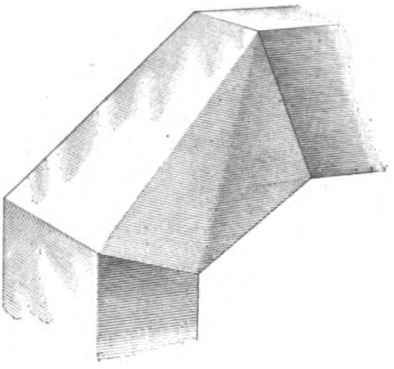

FIG. 16.

CONSTRUCTION.—Draw the lines $A\ B$ and $B\ C$ at right angles to each other, as shown in the elevation, Fig. 17. Measure off a distance of 8 inches on each line from the vertex $B$, and make $x\ A$ equal to the width of the rectangle and $x'\ C$ equal to its length. Draw projectors to the plan from points $x$ and $A$, and produce the projector from $A$ upwards indefinitely. Draw a temporary line $x\ x'$ and bisect at $x$ the outer angle, formed by $x\ x'$ and the vertical projector; produce this bisector until it intersects the projector

Digitized by Google

drawn from $A$. From this latter point of intersection, draw a line to the point $C$, and from $C$ draw a horizontal line of indefinite length. Bisect the angle thus formed at $C$, and produce the bisector until it intersects a horizontal line

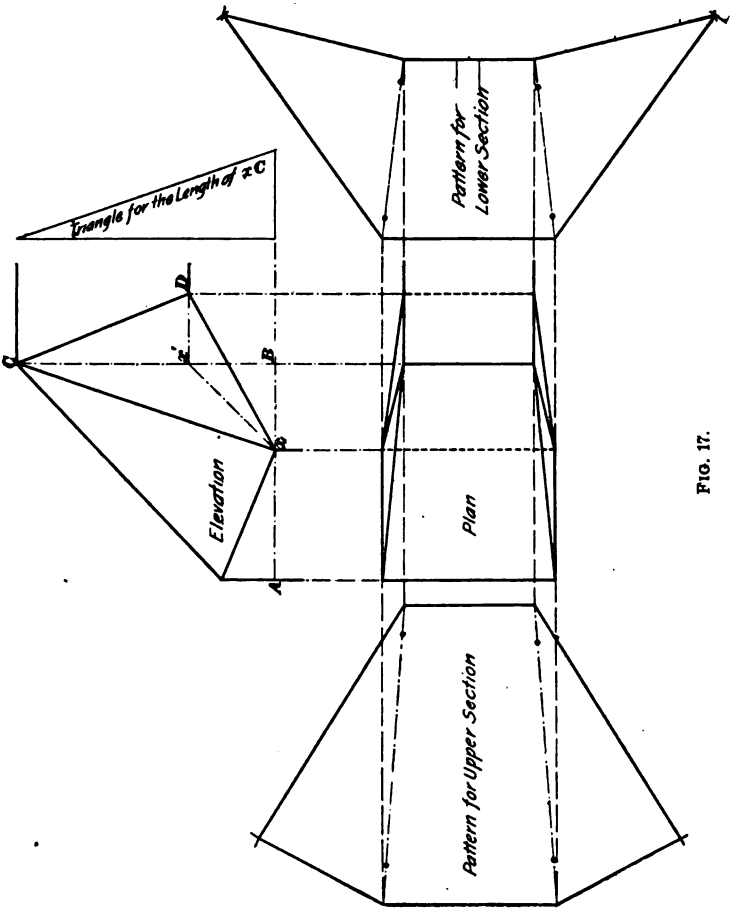


FIG. 17.

drawn from the point $x'$ at $D$. The projection drawings are then completed by a line drawn between the points $x$ and $D$. It will then be seen by comparing the relative positions of the lines defining the surface of the middle section of the elbow that they do not lie in the same plane, as was the



Digitized by Google

case of a similar portion of the transition piece in the preceding problem; but by the same method, this surface may be divided into two separate surfaces, each of which will be a plane, or flat, surface; this line $x\,C$ is accordingly drawn, as shown in Fig. 17. The development of the different pieces is then made in a manner similar to that of the preceding problem, and since the process is fully shown in the illustration, no further description is necessary.

---

PROBLEM 19.

**11. To develop the patterns for an oblique connection in a rectangular pipe.**

EXPLANATION.—This, like the two preceding problems, deals with a particular case of rectangular pipe construction in which the draftsman is required to exercise his imaginative

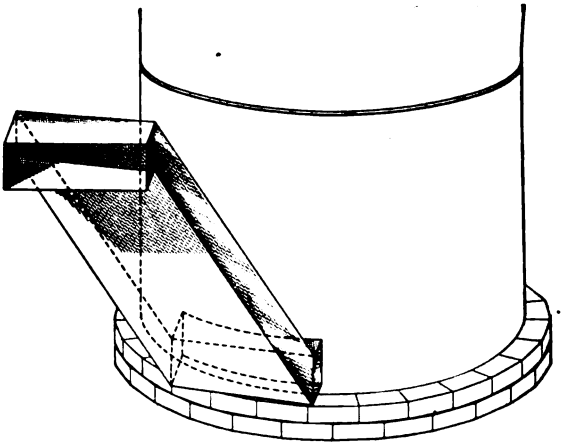

FIG. 18.

powers, together with his knowledge of projection drawing. In fact, unless the student fully understands the various methods that may be used on the drafting board for the purpose of obtaining desired views of objects, and unless he

Digitized by Google

also exercises his imagination for the purpose of comprehending the position in which a given object must be shown, he will often be at a loss for the means of obtaining developments that are otherwise comparatively simple in their construction. The particular case to which the student's attention is directed is shown perspectively in Fig. 18. A rectangular pipe whose dimensions in cross-section are 4 inches by 12 inches must be carried from one horizontal level to a level 24 inches above, so that its sectional area will not be diminished; at the same time, the lateral obliquity is such that the pipe must veer 12 inches to one side, a distance equal to the entire width of the pipe; and, as shown in the plan, the entire construction is to be made within a longitudinal distance of 20 inches. The longitudinal distance from the furnace casing to the nearest corner of the miter is to be 6 inches. The perspective illustration shows these conditions, and a student experienced in the construction of rectangular pipework, as in the erection of blast systems for heating, will recognize the conditions as an example of a fitting occasionally encountered. The drawings are made to a scale of 1½ inches to the foot. It is assumed that the lower horizontal section is attached to the sides of an upright cylinder—as in the case of a cold-air connection, or intake, to a furnace—and that one edge of the pipe, if produced, will pass through the center of the circle that represents a plan of the furnace casing—the diameter of the latter being 32 inches.

CONSTRUCTION.—A portion of the plan is first drawn; in this view, the circle that represents the furnace casing is described with the required radius, as shown in Fig. 19, and from its center a vertical line of indefinite length is drawn for the purpose of defining one side of the lower section of the rectangular pipe. Parallel to this line and toward the right, another vertical line, also of indefinite length, is then drawn, and the perpendicular distance between them is made equal to the width of the pipe—that is, 12 inches. Since these two lines define the width of the pipe, and since they further locate the position of the lower section in the plan,

Digitized by Google

the upper portions of the lines may be considered as projectors, and an elevation accordingly constructed in its proper position on the drawing. At any convenient distance from the plan, draw the two horizontal parallels *a b* and *c d*, making the perpendicular distance between them 4 inches, as called for by the specifications; 24 inches above the line *c d* draw another parallel line, which may be considered as representing the lower edge of the upper rectangular section, while a portion of the projector that passes through *b d* forms the left-hand end of the rectangle. The upper rectangle is then completed, as shown in Fig. 19, and oblique lines are next drawn from the corners of the lower rectangle to corresponding corners of the upper rectangle, thus completing the elevation of the middle section.

Before the completion of the plan is undertaken, it will be well for the student to consider the drawings very carefully. The specifications state that the entire middle fitting must occupy a longitudinal distance of 20 inches—that is, as such distance is shown in the plan—and that the fitting is to be at a distance of 6 inches from the casing, when measured in a similar manner. These distances may be laid off for the present by drawing horizontal lines of indefinite length at the given perpendicular distances—as shown by the lines *e f* and *g h* of Fig. 19. These lines should be carried indefinitely toward the right, inasmuch as they are to be used for the construction of a view in which all the lines of the three sections may be shown in their true length. An examination of the elevation will show to the student that if the entire fitting were rotated on the point *b* as an axis and in the direction of the curved arrow, until the oblique lines of the elevation appeared as horizontal lines, a plan of such a position would present all longitudinal lines of the different sections in their true length, and, further, that the miter lines could be shown in such a view as straight lines. Such a plan view must accordingly be drawn, and for this purpose the view at (*a*) is first constructed. Draw the horizontal line $b' x'$ in any convenient position below the line *e f*, and make its length equal to that of the foreshortened line *b x*

Digitized by Google

Digitized by Google

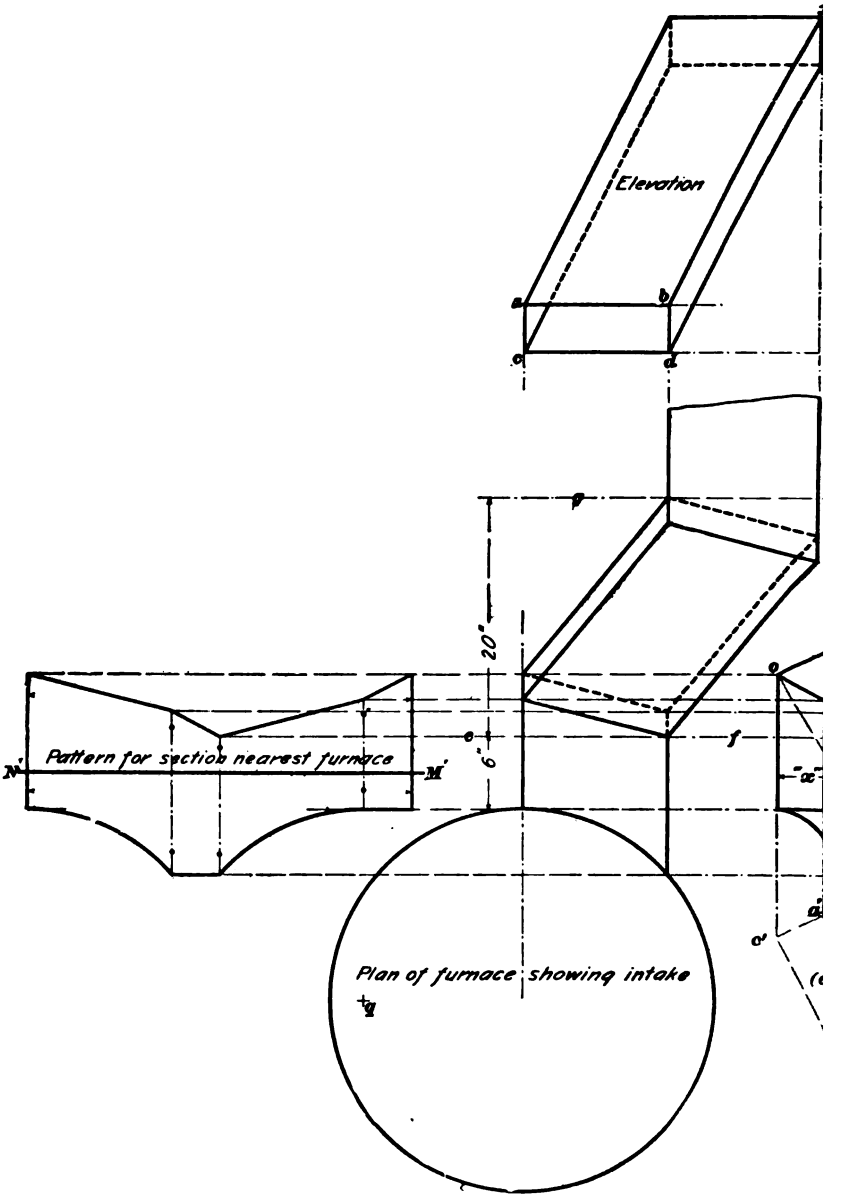


Digitized by Google

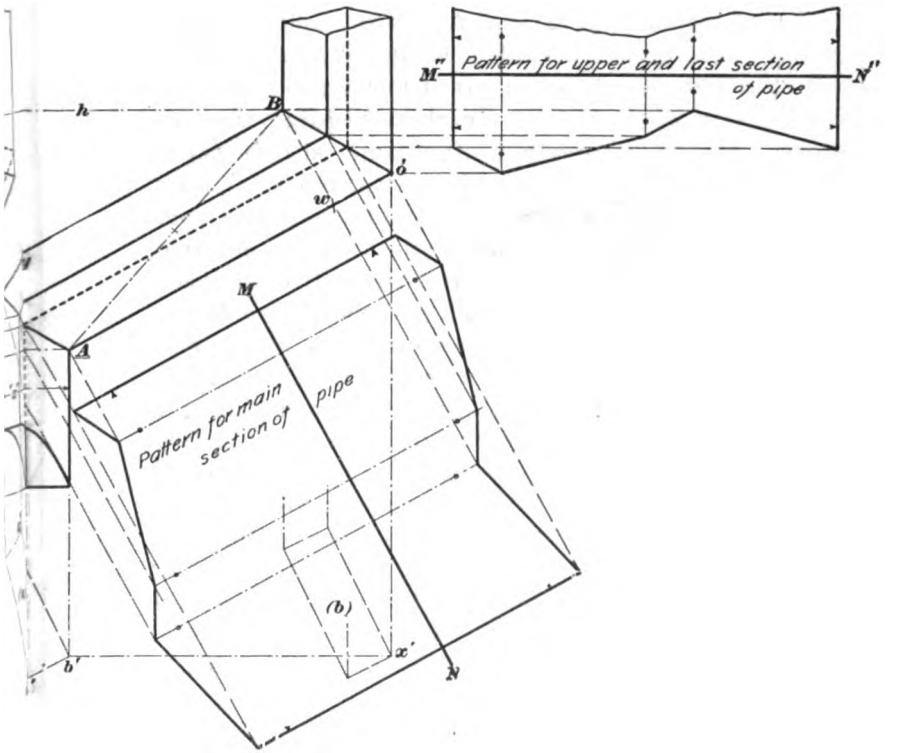


ig. 19.

Digitized by Google

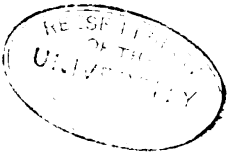

Digitized by Google

of the elevation. Make the angle $a'\ b'\ x'$ in the view at $(a)$ equal to the similar angle $a\ b\ x$ of the elevation and complete the rectangle shown by the dotted lines at $(a)$ in Fig. 19, from the four corners of which carry vertically upwards projectors of indefinite length; also complete the view of the upper section in its relative position, as shown at $(b)$, and draw similar projectors from each corner of the rectangle in the manner shown. It is now possible to fix the position of two principal points of the desired view; that is, the position of the point $A$ on the horizontal line $e\ f$, and the position of the point $B$ on the horizontal line $g\ h$. It is known, further, that each point represents a position at the throat of the corresponding miter. Again, a line drawn between the points $A$ and $B$ will be a diagonal for a rectangle whose altitude is equivalent to the perpendicular distance between the outer projectors drawn from the view of the rectangle at $(a)$; that is, equal to the dimension $x$, Fig. 19. Knowing these facts and that the diagonals of a rectangle intersect at their middle points, the student can construct the remaining portions of the desired full view and ascertain the exact positions of the two miter lines. This result is accomplished as follows: Bisect the line $A\ B$, and from its middle point as a center, with a radius equal to one-half the entire length of the line, describe arcs of indefinite length, as shown in Fig. 19. From the points $A$ and $B$, respectively, as centers, with a radius equal to the length of the dimension $x$, describe short arcs that will intersect at $w$ and $y$ with the arcs described from centers $A$ and $B$. Draw $B\ y$ and produce the line until it intersects the vertical projector drawn from $c'$; in like manner, draw $A\ w$ and produce the line until it intersects the vertical projector drawn from $x'$. Draw $A\ o$ and $B\ o'$, which will be the desired miter lines, and the remaining oblique lines of the middle section may then be drawn parallel to $B\ y$ from the intersections of the projectors drawn from points $a'$ and $d'$ of the view at $(a)$. If the work has been accurate to this point, these parallels will intersect the miter line $B\ o'$ at the exact intersections of similar vertical projectors drawn from corresponding points of the

Digitized by Google

view at (*b*). The projection drawings are now complete, and the patterns for the different sections may be obtained as shown in Fig. 19; the pattern for the middle section is laid off on the stretchout *M N* drawn at right angles to the parallel lines of the oblique section, and for the remaining sections as shown in the illustration at *M' N'* and *M'' N''*. The distances for these stretchouts are obtained from either of the views shown at (*a*) or (*b*), or from the views of the rectangles shown in the elevation. If desired, the projection from the full view to the plan may be drawn, although this part of the work is not necessarily involved in the production of the pattern. The curves for the end of the lower section nearer the furnace casing may be obtained by describing arcs, as shown, with radii equal to that of the casing; their respective centers are thus located at *p* and *q*, and arcs that define the pattern outlines may then be described directly on the development, as shown in Fig. 19.

---

PROBLEM 50.

**12. To develop the patterns of a sphere, or ball.**

EXPLANATION.—The construction of the patterns for these forms comes under the general heading Approximate Developments, to which the student's attention has been directed in *Development of Surfaces*. The underlying principles of the methods used have already been explained, and in this problem it is desired merely to call attention to some of the practical shop methods used for special cases. The metal worker seldom has occasion to develop the patterns for small spheres made of the thinner gauges of metal, for the reason that spun hemispheres, or half balls, may now be obtained in almost any desired metal and at a cost that renders the hand-made article prohibitive. The patterns for spun work, or as the metal spinner terms them, the *flat blanks*, are circular disks of metal that should contain, theoretically, the same area as the finished form, but since in actual practice it is found that the metal stretches

Digitized by Google

considerably during the process of spinning, it is customary for the spinner to determine the size of his blanks by actual trial. Besides, it is found that different metals stretch unequally. Therefore, no general rule can be given, other than to make the trial blank of such size as should be used theoretically and to determine the exact size after trial.

In order that the student may understand more fully the manner of laying off the patterns for the zones of a sphere, and that he may be enabled to provide for the amount of stock required, as well as the customary allowances for this class of work, the actual shop methods for the development of the sections are shown in this problem. The construction drawings are made to a scale of 3 inches to the foot, and it is assumed that patterns are required for a ball 20 inches in diameter.

CONSTRUCTION.—To represent an elevation of the ball, describe the circle shown in Fig. 20, and draw the vertical center line that is to be extended upwards indefinitely. The first step consists in determining the number of zones that are to make up the surface of the ball; since this is a matter more for the consideration of the workman and is governed by the appliances at hand for the raising process, no reasons will be given here for the manner in which the zones will be defined. As has been shown in *Development of Surfaces*, the pattern for the middle zone consists of a straight strip of metal whose length equals the circumference of the sphere. To this distance is added, in all cases where heavy metal is used, an amount similar to that allowed for cylinders, as previously explained. In this particular case, the width of this segment may be conveniently taken as 4 inches; set the dividers to a distance of 1 inch, and, having drawn the horizontal center line shown in Fig. 20, step off two spaces on the outline of the circle in both directions from *a*. No attention is paid to the lower half of the ball, since the patterns for the upper half will serve, also, for the lower half. From the point *b*, Fig. 20, draw a horizontal line across the surface of the elevation, thus defining the lower

Digitized by Google

boundary of the second zone. It may be assumed that a width of 6 inches is desired for the pattern of this zone. Six spaces on the outline of the ball are accordingly stepped off with the dividers, as shown in the illustration; and from

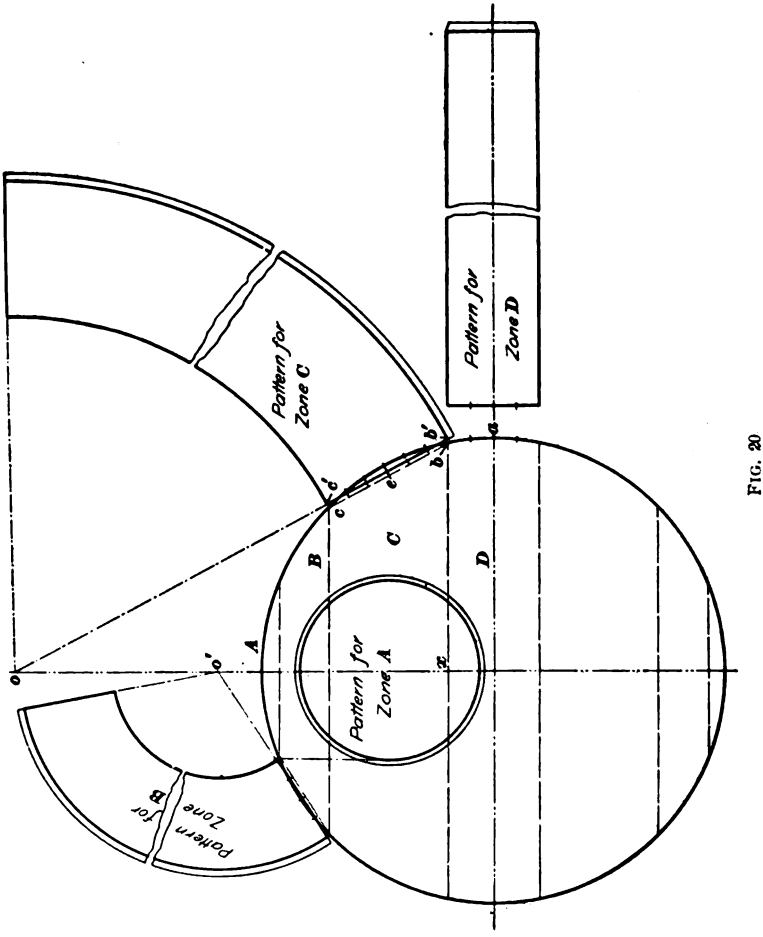


FIG. 20

the upper point thus determined at *c*, another horizontal line is drawn across the elevation. Draw the chord *b c*, and erect a perpendicular to it from the middle point on the arc *b c*. Through the middle point of this perpendicular and

Digitized by Google

parallel to the line *b c*, draw a line of indefinite length, producing this line until it intersects the vertical center line at the point *o*. On this oblique line, both above and below the perpendicular at *c*, a similar number of spaces are stepped off as are shown on the arc of the circle; the points *b'* and *c'* are thus located, and the pattern for the frustum may then be laid off with radii *o b'* and *o c'*, as shown in Fig. 20. The length of the arc described with the outer radius is determined by ascertaining the length of the circumference described with the radius *b x* and then making the arc of corresponding length. As shown by the outer arc, indicated by the light line in Fig. 20, an amount for lap and for thickness of material must then be added to the pattern. The pattern for another zone is shown in Fig. 20, but the method of development being the same as that already described, no further description is necessary. The upper zone, also, is shown in the illustration as being formed of a single circular disk of metal. These pieces are then subjected to the raising process, and the desired curve is obtained by careful hammering, with frequent applications of profiles or stays.

When spheres are to be constructed of a heavy gauge of any ductile metal, as copper, it is customary to raise or hammer the desired shape out of a single piece of metal; or, if the ball is of large size, as in the case of work for breweries or for distilling apparatus, the hemisphere is sometimes made up of four pieces, called **gores.** A rule of thumb, by means of which comparatively accurate results may be obtained, is shown in Fig. 21. Since the distortion of the metal caused by the raising process varies so much with the thickness and quality of the material, no accurate means can be indicated for determining such patterns. On this account, the method shown in Fig. 21 is perhaps to be recommended as best adapted for all metals whose ductility approaches that of copper. The circle that represents the elevation of the ball is first described, and is then divided by vertical and horizontal diameters into quadrants. Draw

Digitized by Google

the oblique line *a b* as shown, and from its middle point erect a perpendicular *c d*. Bisect this perpendicular, and draw a line parallel to *a b* through the point *x*. With the point *x* as a center and with a radius equal to the distance between the points *x* and *b*, describe arcs from *a* and *b* that will intersect the line drawn through the point *x*. The length of this line is now to be taken as the length of one of the sides of an equilateral triangle, which is constructed as shown at (*a*), Fig. 21. The outer curves are obtained by describing short arcs at *p*, *q*, and *r* from centers located at the vertexes of the angles of the triangle, and with a uniform radius equal to the diameter of the required sphere; with the same radius and with the points *p*, *q*, and *r* as centers, the curves shown in the illustration are then described. If it is desired to allow for lap, arcs are described from the same centers, but with a longer radius, as shown by the outer light lines at (*a*), and the metal is cut out along these lines. The amount of lap necessary can be determined only by trial, but a workman constantly engaged in this class of work will soon become proficient in determining this amount.

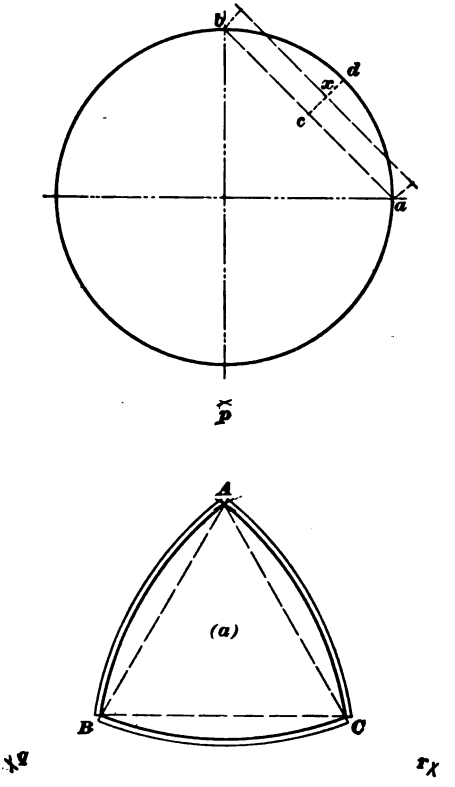


FIG. 21.

Digitized by Google

PROBLEM 51.

**13. To develop the patterns of a spirit still.**

EXPLANATION.—Spirit stills are usually made of heavy sheet copper, and are of such a form that the main body of the article resembles an oblate spheroid. A portion of the bottom of the still is bulged inwards, possibly with a view of promoting the circulation of the contents, and also to add strength to the apparatus. The opening at the top, as shown in the perspective view given in Fig. 22, is through a narrow neck that widens in a gradual curve until it meets the lower base of an elongated conic frustum. An expansion of the vapors, with a consequent amount of cooling, takes place within the walls of this frustum, so that, when the vapors pass through the rectifiers at *a* and reach the cooling worm shown at *b*, at the right of the illustration in Fig. 23, they are more readily condensed.

FIG. 22.

Just why the particular form of the oblate spheroid has been selected by distillers of spirits is not readily apparent, but for some reason it seems to have been quite generally adopted; and while different makers occasionally depart from the exact lines on which the still shown in this problem is constructed, the one here described may be taken as a fair example of what this class of work demands. Strictly speaking, the still consists of the boiler, as many rectifiers as the distiller desires interposed between the boiler and the worm, and the worm itself; but the coppersmith usually refers only to the boiler when mention is made of a still, the term distilling apparatus being used to designate the entire system of construction.

Digitized by Google

Since the metal worker is usually given but one dimension, besides the capacity of the still, when he is required to produce this article, he must make his own calculations in reference thereto. In this problem a different method will be pursued—the dimensions will first be given and the patterns for the still developed in accordance with such figures; afterwards the student will be shown how to apply the rules for finding the capacity. Let it be required to make the drawings and the patterns for a still whose diameter is

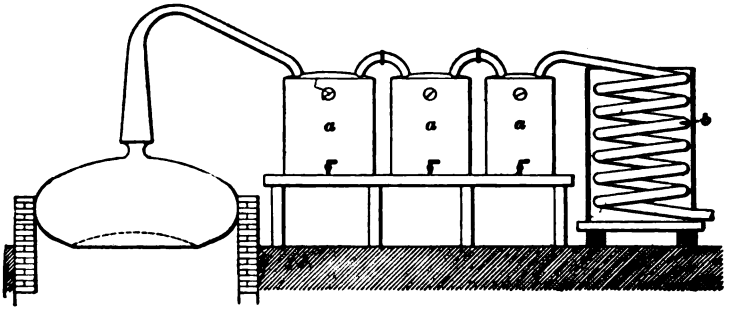

FIG. 23.

5 feet 4 inches and whose height is 2 feet 8 inches; that is, these dimensions are assumed to apply to the entire spheroid that composes the body of the still. It may be further assumed that the bottom will bulge along a horizontal line 4 inches above the lower edge of the spheroid. Just what is meant by this will appear during the construction of the projection drawings. The dimensions for the opening and for the conic condenser will also be given as the drawing progresses.

CONSTRUCTION.—Since the body of the still is an oblate spheroid, an elevation of the same will be represented by an ellipse whose major axis corresponds in length to the diameter of the body, and whose minor axis equals the height of the body. The major axis will be shown along a horizontal line, and accordingly the ellipse may be drawn as shown in Fig. 24. Since an ellipse constructed by circular arcs will serve all practical purposes, the solid represented in Fig. 24 may be drawn in this way and to a scale of

Digitized by Google

1½ inches to the foot. The vertical and horizontal center lines should first be drawn, and the former should be extended indefinitely both above and below the figure. After the curve has been defined, the horizontal line *a b* is to be drawn 4 inches above the lower extremity of the ellipse; and with the same radius as that used for the portion of

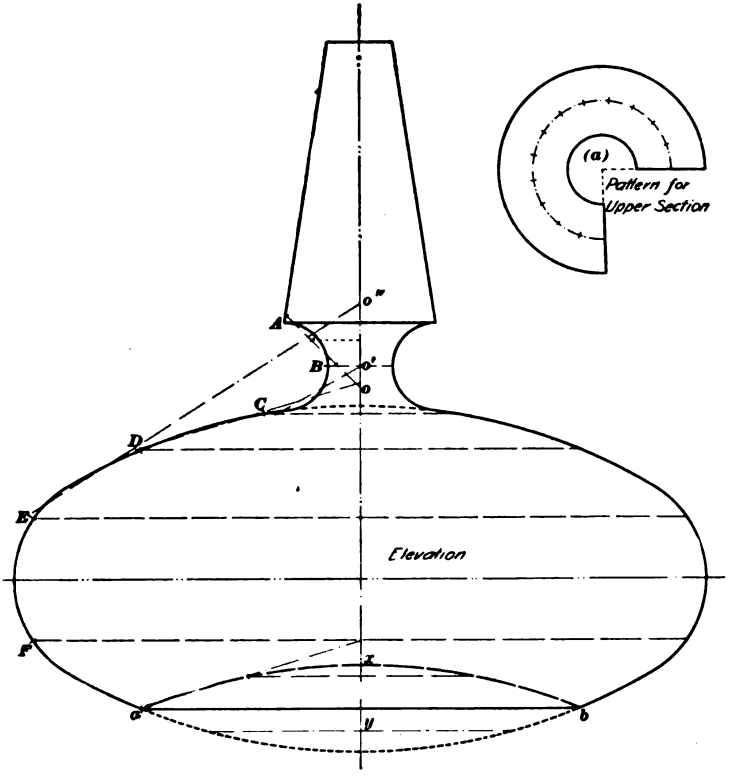


FIG. 24.

the curve below the line *a b*, with a center on the vertical center line, the curve *a x b* is described. The curve at the opening, or the *neck*, as it is called, of the still, is described with a radius of 4 inches, and in such manner that the clear opening will be 6 inches in diameter. These curves, or arcs, should be described in such manner that they will

Digitized by Google

be tangent to the lines of the ellipse. The frustum that forms the condenser for the still is to measure 14 inches in diameter at the bottom, 6 inches at the top, and 26 inches in vertical height. In this problem, no attention will be paid to the remaining portions of the distilling apparatus, since the student will be able to understand, from the descriptions here given, the manner in which the patterns for the other parts may be developed.

The patterns for the still are developed in precisely the manner described for the ball in the preceding problem; that is, after the mechanic has determined, from the widths of metal at his command, just what sizes are most desirable for the patterns, he divides the surface of the spheroid and of the other parts of the still into as many segments as he desires, and proceeds to develop the patterns for each segment by the usual radial process. A convenient method of division is indicated in Fig. 24 by the horizontal lines that start from the points indicated by capital letters. Thus, the segment at the top between the letters *A* and *B* is developed, as shown at (*a*), along a frustum whose vertex is at the point *o* in the elevation; the segment next below, between *B* and *C*, is developed in a similar manner from radii whose lengths are measured from the point *o'*. The illustration shows that the segment between the letters *E* and *F* may be formed from a straight piece of metal, as in the case of the middle segment of the ball in the preceding problem. After these pieces have been cut from the sheet metal, they are raised, or hammered, into shape, and are afterwards assembled in accordance with the form shown in the elevation. As will be seen from the drawing in Fig. 24, the patterns for the pieces that compose the bulge at the bottom are obtained either from the original outline of the ellipse or from the broken line that indicates the actual outline of the metal. Since the operation has been fully described in the preceding problem, it is unnecessary for additional constructions to be made—the construction shown at (*a*) being merely duplicated in accordance with the different radii for the several segments.

Digitized by Google

CAPACITY.—To ascertain the capacity of a vessel of this shape is a comparatively simple problem, provided the student refers to the rules for Mensuration given in *Arithmetic*. There it is stated that the volume of a spheroid is two-thirds that of the circumscribing cylinder; in other words, it is necessary merely to find the volume of a cylinder whose diameter is the same as that of the spheroid and whose height is equal to that of the spheroid. Reducing, therefore, the diameter to inches, 5 feet 4 inches = 64 inches. From the table of Areas, it is found that a circle 64 inches in diameter contains 3,217 square inches. Then, 3,217 × 32 (the height in inches of the spheroid) =102,944 cubic inches, or the volume of the circumscribing cylinder. Two-thirds of this, or 68,629.33 cubic inches, is the volume of the entire spheroid. Now, on account of the bulge in the bottom of the still, it is seen that an amount must be deducted from this volume equal to that of the two spherical segments defined in the elevation. The volume of these spherical segments may be readily found by means of the prismoidal formula, but before this formula can be applied, the area of what is termed the *mid-section* must be ascertained. In the case of the spherical segment, the mid-section, of course, will be a circle whose diameter is represented by a horizontal line drawn midway between the upper and lower bases of one of the segments. The lower segment in Fig. 24 may be used for this calculation, and a line that terminates at each extremity of the dotted curve line is drawn through the point *y*, as shown. On measuring the line *a b* as accurately as possible, it is found to scale, approximately, 3 feet 4 inches, and the line drawn through *y* to scale, approximately, 2 feet 4¾ inches. Reducing these dimensions to inches and applying the prismoidal formula, we have

| | |
|---|---|
| Area of circle whose diameter is 40 inches = | 1,256.64 |
| To which is to be added four times the area of the mid-section, or 4 × 649.182 = | 2,596.73 |
| Total . . . . . | 3,853.37 |

Digitized by Google

Then, 3,853.37 multiplied by 4, the number of inches in the height of the segment, equals 15,413.48, which divided by 6, in accordance with the formula, gives as a result 2,568.91, which is the number of cubic inches in the volume of the segment. This result must, in turn, be multiplied by 2, since there are two segments, or $2{,}568.91 \times 2 = 5{,}137.82$. Then, $68{,}629.33 - 5{,}137.82 = 63{,}491.51$; and dividing by 231, the number of cubic inches in a gallon, the result 274.9 is obtained. The still will, therefore, have a capacity of 274.9 gallons.

NOTE.—In accordance with the prismoidal formula, the area of the top section should also be included in this calculation, but in this case, the solid is of such shape that the top section equals 0.

---

PROBLEM 52.

**14. To develop the patterns for a brewing kettle.**

EXPLANATION.—Fig. 25 shows a perspective view of a particular form of brewing kettle. Such kettles are made in a variety of shapes to suit the conditions and constructions best adapted to the requirements of particular breweries. In their construction the coppersmith has to use many special devices in order to handle, without denting, the large sheets of heavy metal from which they are made. Indeed, the brewing kettles in the ordinary city brewery would cause the country-bred sheet-metal worker to open his eyes in wonderment as to what method could have been employed to erect the work in position. Such large kettles

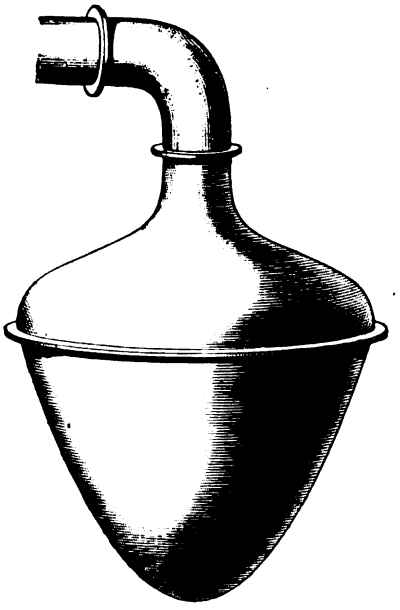

FIG. 25.

Digitized by Google

are frequently sent out from the shop in sections, and are put together only when the masonry or woodwork surrounding them is in final position. Oftentimes the kettle consists of a hemispherical base of heavy copper, with straight cylindrical sides of lighter material. The patterns for such shapes, together with the method of ascertaining the contents of the vessel, will be apparent from the preceding problems.

This particular problem represents a kettle whose lower section is in the form of a paraboloid; its greatest diameter may be taken as 8 feet and the height of the lower section as 6 feet. The upper section is formed by an inverted cone, whose convex surface is rounded at the upper and lower extremities in accordance with dimensions that will be given during the construction of the projection drawings. The opening at the top is through an 18-inch pipe having a square bend, or elbow, that carries off the vapors from the liquid. These drawings are to be made to a scale of $\frac{1}{2}$ inch to the foot, and, as in the preceding problem, after completing the projections and defining the segments that make up the body of the kettle, no further attention will be paid to the development of the patterns, since the process is the same as that already explained. In this case, however, the method of producing elbow patterns used by the coppersmith will be explained at some length, since it differs materially from that used by other sheet-metal workers. The question of capacity, also, is an interesting one, and deserves some attention in this problem.

CONSTRUCTION.—The instructions for drawing a parabola of given dimensions were given in *Geometrical Drawing*, and the lower portion of the elevation of the brewing kettle, as shown in Fig. 26, is to be constructed in accordance with such directions. The outline of the upper section, or dome, of the kettle is determined by first drawing the line *c d* parallel to *a b* and 3 feet 3 inches above the latter; the lower curve is then described, with a radius of 18 inches, from centers located on the line *a b*; and the upper curve, with a radius of 15 inches, from centers located on the line *c d*.



Digitized by Google

Before drawing the curve for the upper portion, the width of the opening should be laid off on the line *c d*, as shown in Fig. 26, and after the curves have been defined, the straight

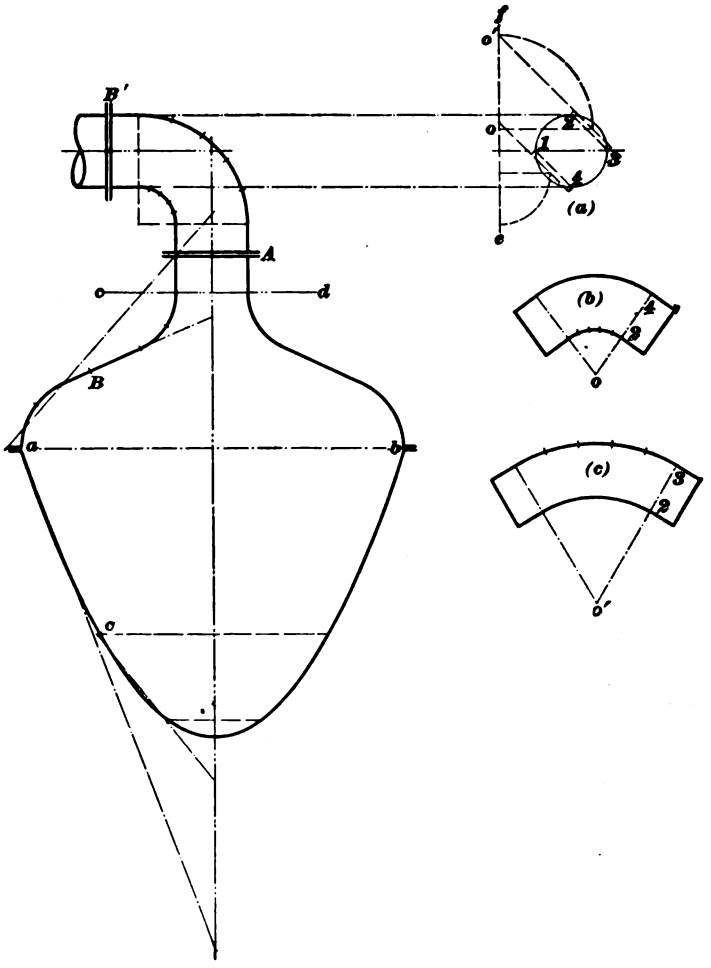


FIG. 26.

part of the top is drawn tangent to the arcs. Above the line *c d*, a vertical pipe, whose diameter is the same as that of the opening, is carried an indefinite distance and is

Digitized by Google

topped with a square elbow, whose outlines are determined by quadrants described with radii from a common center located 9 inches to the left of the outer line. Flange unions, as at $A$ and $B'$, are often used to connect such fittings and are formed by laying off flanges in the way well known to the coppersmith; or, in some instances, they are made of separate pieces of metal, to which the fittings are brazed. As indicated by the dotted horizontal lines drawn to the center line, the surface of the kettle is next divided into segments of convenient width that are developed by the methods described in former problems.

The method of obtaining the pattern for the elbow at the top of the kettle is shown in the drawing at ($a$). In this view, the vertical line $ef$ is first drawn of indefinite length, and the circle that represents a section of the elbow opening is then described at such a distance to one side of this line as may be determined by the length of the inner radius shown in the elevation; that is, the perpendicular distance of the point *1* from the vertical line $ef$ is equal to the length of the radius used for describing the throat of the elbow in the elevation. It is customary for coppersmiths to make such elbows of four pieces and to have the seams run in a longitudinal direction along the elbow. Accordingly, the circle shown at ($a$) is divided by horizontal and vertical diameters, in order to locate the points *1*, *2*, *3*, and *4*. The segments between points *1* and *4*, and between *2* and *3*, are then treated in the same manner as was the surface of the sphere in Problem 50; that is, oblique lines are drawn to the vertical $ef$ through the mean curvature, and the lengths of these oblique lines then determine the lengths of the radii used for the development of the patterns. The development of the patterns is shown at ($b$) and ($c$); and, since corresponding positions are similarly designated in the different views, the student will have no difficulty in understanding exactly what is implied in the drawings. It will be noted that two pieces similar to the pattern at ($b$) and also two pieces similar to that shown at ($c$) will be required for the elbow.

Digitized by Google

CAPACITY.—The capacity of such kettles is usually determined by the volume contained in the lower section, and no attention is paid to the upper section. Since it is true that the volume of a paraboloid is exactly one-half that of the circumscribing cylinder, the capacity of the kettle shown in Fig. 26 may be readily ascertained.

In order to find the contents in gallons, the dimensions may be conveniently reduced to inches and the operations carried on in accordance with the principles now familiar to the student. The diameter of the kettle being 8 feet, or 96 inches, it is found, by the aid of the table of Areas, that the area of a circle 96 inches in diameter is 7,238.25 square inches; multiplying this sum by 72, the height of the parabola in inches, the cubical contents of a circumscribing cylinder is found to be 521,154 cubic inches. This, in turn, being divided by 231, the number of cubic inches in 1 gallon, gives 2,256+. Since the volume of the circumscribing cylinder is thus found to be 2,256 gallons, the volume of the paraboloid, or the lower portion of the brewing kettle, is one-half of this amount, or 1,128 gallons.

The student is thus enabled to arrive at a definite conclusion with respect to the capacity of this solid and without having to use a long or complicated formula. If the relation of the different parts of a complicated form are thus referred to the cylinder or to some other form whose volume may be readily calculated, tedious operations and calculations will often be avoided.

---

PROBLEM 53.

**15. To develop the patterns for a pump compression chamber.**

EXPLANATION.—The development of the patterns for this article is accomplished by the usual process applied to the radial solids, but since the copperworker, in his methods of construction, apparently overcomes what has heretofore been considered a fundamental law in regard to these solids,

Digitized by Google

it is proposed to give a brief description of the means used in reaching the desired end. A perspective view of the pump chamber is shown in Fig. 27, and from the illustration it would appear that the development of the patterns required would in no wise differ from work that has already been shown. As a matter of fact, however, the pump chamber, as usually constructed, is formed of but two pieces; the entire lower portion of the body is of one piece; and, as may be seen from the chamber at Fig. 29 (*b*), the flattened portion of the top forms the remaining piece—the annular seam shown in the illustration defining the boundary between the two pieces of metal. These articles are usually made of heavy sheet copper; this being a very ductile metal, the worker is, therefore, enabled to hammer out almost inconceivable shapes from a single piece of metal, and in this manner accomplishes results that are sometimes apparently at variance with the usual results obtained by the pattern-cutter. The drawings for this problem may be constructed to a scale of 3 inches to the foot, and the dimensions for the projection drawings shown in Fig. 28 are given in the following construction:

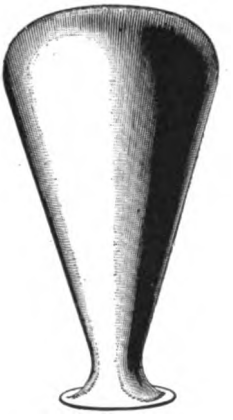

FIG. 27.

CONSTRUCTION.—Draw the vertical center line *A B*, Fig. 28, and at a convenient distance above the point *B* draw the horizontal line *c d*; make this line 5 inches long, and fix the points *c* and *d*, each 2½ inches from the center line. With a radius of 1½ inches and with the points *c* and *d* as centers, describe arcs as shown.

Next, draw the line *e f* perpendicular to *A B* and 12 inches above *c d*; fix the points *e* and *f* 4 inches apart—that is, 2 inches on either side of the center line—and with these points as centers, describe arcs of indefinite length with a radius of 2½ inches. In the manner shown in Fig. 28, define the lateral outlines of the pump chamber with oblique lines

Digitized by Google

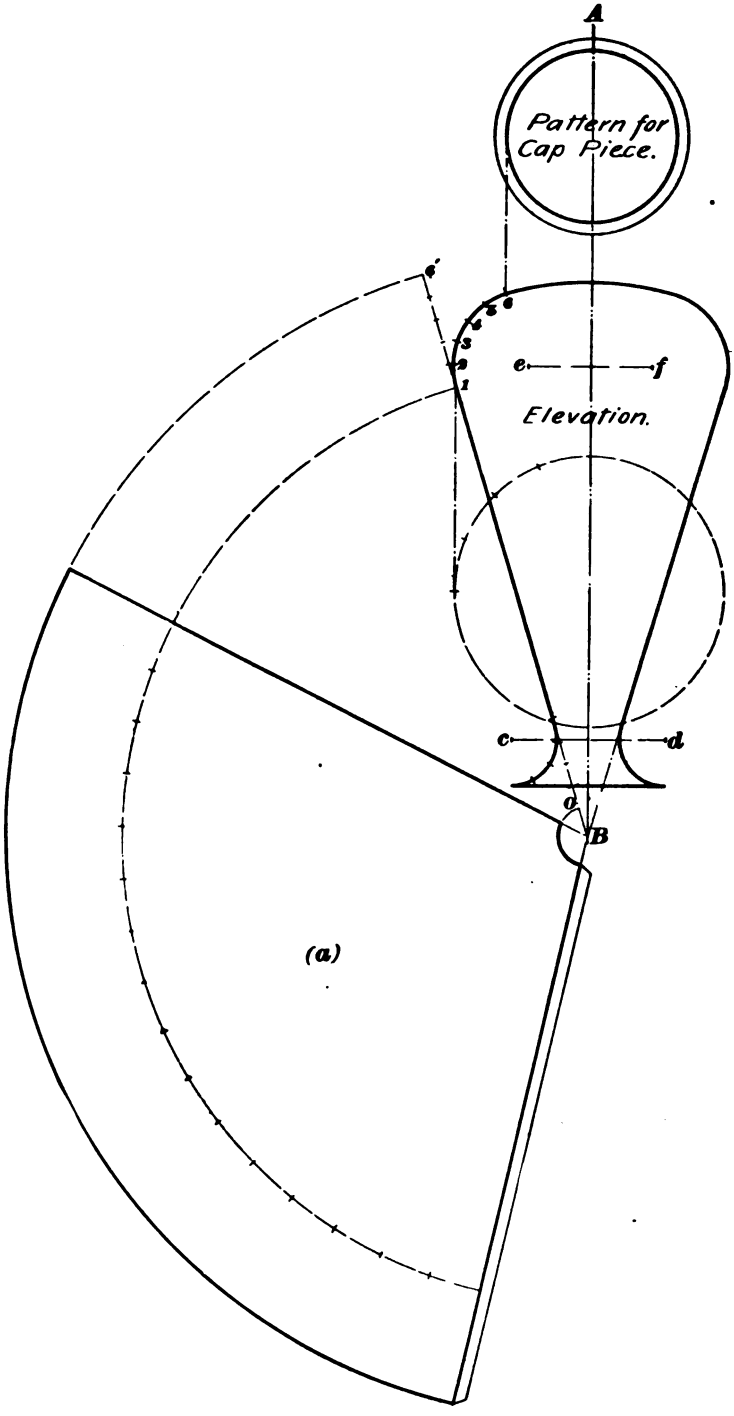


FIG. 28.

Digitized by Google

tangent to the arcs; and with a radius of 10 inches from a center located on the center line, describe a short arc at the upper portion of the figure that will be tangent to the arcs described from the points *e* and *f*. The projection drawing is now complete, and the patterns are to be obtained in the following manner:

Fix the point *1* at the upper extremity of one of the straight sides, and step off a few short spaces with the dividers, as shown by the points *1*, *2*, *3*, *4*, *5*, and *6*, continuing them along the outline to the point where it is desired to locate the seam. The straight side is next produced obliquely upwards, as shown in Fig. 28, and a similar number of equal spaces noted along its length. This process is also followed at the lower portion of the elevation, as shown, and the straight side is then produced until it intersects the vertical center line. The pattern is then laid off by means of arcs described from *B* as a center and with the radii *B o* and *B 6'*. In order to ascertain the length of the arcs thus described, a circle whose radius is equal to the perpendicular distance between the point *1* and the center line is described in the manner shown, and its outline spaced off by points located at equal distances from one another. Another arc is then described from the point *B* as a center, with a radius *B 1*, and the required number of spaces marked off on its outline, as shown in the view at (*a*). While a pattern of this form would be of comparatively little use to the ordinary sheet-metal worker, the coppersmith is able, by a method that involves first wrinkling, or crimping, the outer edge of the metal, and second, patient hammering and working of the metal, to produce the shape called for by the projection drawings. While it is not the purpose of this Course to attempt to describe the various shop processes used in the different trades, an illustration of the method of accomplishing these results is given in Fig. 29. In this view, the pump chamber is shown at (*a*) as having had its longitudinal seam brazed and the outer edge wrinkled in the manner previously described; at (*b*) the upper edge of the body has been hammered into the required shape with the planishing

Digitized by Google

hammer. By this means, the coppersmith is enabled to avoid a construction involving the great number of separate pieces of metal required by the tinsmith or the boilermaker for a similar piece of work. In the development of the patterns for his work, therefore, the coppersmith may often

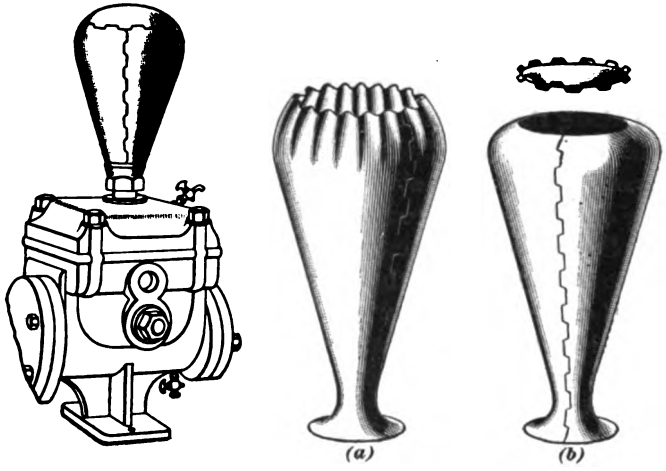


FIG. 29.

avoid some of the lengthy operations that have been described. The top of the pump chamber is made of a separate piece, notched in the manner shown and brazed into the body of the article. The curve for the lower end, shown in the projection drawings, is obtained by stretching the metal over a suitably shaped stake.

---

PROBLEM 54.

**16. To develop the patterns for a ship ventilator—cross-seams.**

EXPLANATION.—The ship's ventilator shown in perspective in Fig. 30 is one of a type commonly used. As is the case with nearly every article made by the sheet-metal worker, these ventilators are made in a great variety of forms and in proportions to suit the taste of the worker

Digitized by Google

or of the ship owner. No rule can be given to suit all conditions and requirements, but the general proportions that will be given for the construction of the projection drawings in this problem may be taken as a basis, and such changes may be made for special cases as suggest themselves to the mechanic. These ventilators are usually constructed of heavy metal, since they must withstand severe wind storms, although they are often so erected as to admit of being taken down when the ship encounters heavy weather. The seams should be strongly soldered or brazed together, and are oftentimes further strengthened by rivets. These matters, however, relate more to the actual shop practice used and to the desire of the worker to produce an article that will be durable than to the questions involved in the development of the patterns.

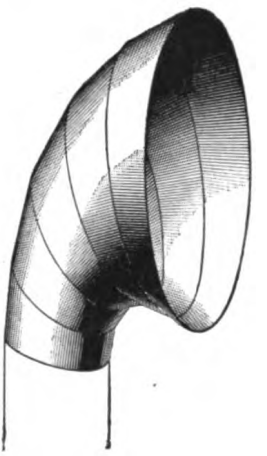

FIG. 30.

As will be seen from the illustration in Fig. 30, the ventilator consists merely of an irregularly flaring elbow; the cross-section of the lower opening is in the form of a circle, while the outer opening is defined in a front elevation by an ellipse. The question as to how many pieces will compose the ventilator is first to be decided by the worker—in this problem a ventilator made up of six sections is to be constructed. The drawings are to be made by the student to a scale of 1½ inches to the foot, and the diameter at the bottom will be assumed to be 12 inches. The remaining dimensions will be given during the construction of the projection drawings.

CONSTRUCTION.—Since the principal proportions of the ventilator may be shown in a side elevation, that view is first to be drawn. Construct the right angle *A B C*, Fig. 31, and produce its sides indefinitely upwards and toward the left. In this case, it may be assumed that the amount

Digitized by Google

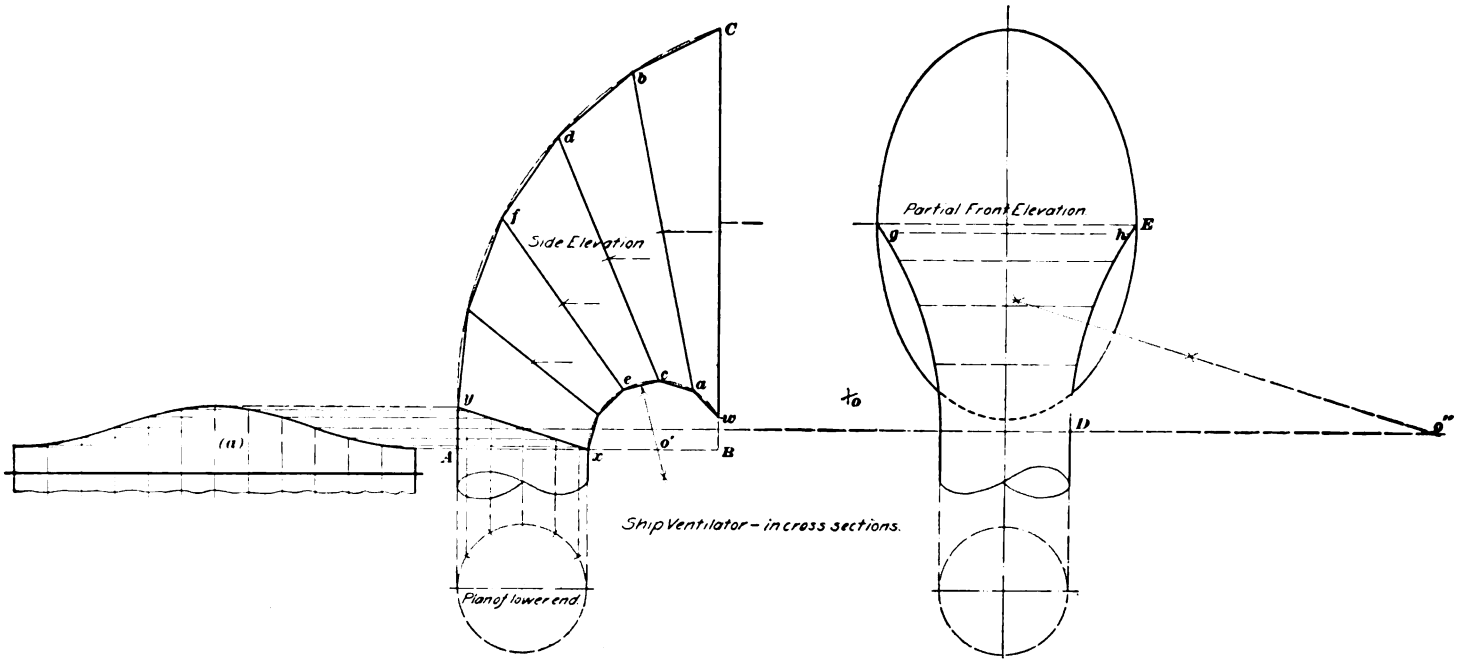


FIG. 31.

Digitized by Google

of overhang will equal the diameter at the bottom; accordingly, a distance of 12 inches is measured on the horizontal from the vertex $B$ and the point $x$ is located as shown in Fig. 31. Another 12 inches is then measured off on the same line from the point $x$, in order to locate the point $A$. From these points, $x$ and $A$, projectors are carried to the plan, and the outline of the circle is then described in the latter view, as shown.

The projector from $A$ may then be carried upwards for a short distance, and, with the point $x$ as the lower position of the miter line, the regular line of intersection for a six-pieced round elbow may be drawn in the usual way. Next, the distance $B\,w$ is measured off on the vertical side of the right angle and is made equal in length to one-quarter the diameter. In the side elevation, the point $w$ represents the lower extremity of the elliptical end of the ventilator, the point $C$ represents the upper extremity—the distance $w\,C$ being equivalent to three times the diameter of the lower opening.

In order to define points on the upper outline of the ventilator, the compasses are now set to the distance $w\,C$, and with the points $y$ and $C$, respectively, as centers, intersecting arcs are described that fix the point $o$, Fig. 31; with the point $o$ as a center and with the same radius, the dotted arc $y\,C$ is then described, as shown. The arc $y\,C$ is next divided, by spacing with the dividers, into five equal parts, and chords are then drawn between the points thus fixed.

The points on the lower outline of the ventilator are then spaced in a similar manner on an arc described from the point $o'$ as a center with a radius $o'\,x$. The method of locating the point $o'$ on the line $A\,B$ is fully shown in Fig. 31; intersecting arcs are first described from the points $x$ and $w$ as centers, with a radius slightly longer than one-half the perpendicular distance between the points $x$ and $w$; the point $o'$ is then located at the intersection of the bisector with the line $A\,B$. As in the case of the upper outline of the ventilator, chords are next drawn between the points located on the outline of the arc. Lines that

Digitized by Google

define the different sections of the ventilator may now be drawn across the side elevation between the corresponding points of each arc; that is, draw *a b*, *c d*, *e f*, etc. as shown in Fig. 31. A portion of the front elevation must now be drawn, in order that certain necessary dimensions may be ascertained. This view, if the directions given in *Practical Projection* are carefully observed, should be drawn toward the left of the plan, but for convenience and to save time by avoiding the drawing of unnecessary projectors, it may be placed to the right of the side elevation, as shown in Fig. 31. In any convenient position to the right of the side elevation, therefore, draw the horizontal and vertical center lines, taking care that the horizontal center line is drawn, or rather projected, from a point midway between *w* and *C*. Since it is customary to make the ellipse at the opening of the ventilator of such proportions that the minor axis is equal in length to two-thirds that of the major axis, the ellipse shown in the front elevation may be constructed in accordance with these dimensions, and, to save time, may be drawn by circular arcs. The circle in Fig. 31 below the front elevation may then be described with a radius equal to that used for the plan, and from the extreme right and left extensions of its horizontal diameter, projectors are to be carried indefinitely upwards; these projectors are next intersected by a horizontal projector drawn from a point midway on the line *x y* of the side elevation, as in Fig. 31. The horizontal projector last drawn should be carried some distance beyond the right-hand side of the front elevation, for the center from which will be described those arcs that form the lateral sides of the ventilator is to be located on this line. To determine the location of these centers, arcs having a radius slightly more than one-half the perpendicular distance between *D* and *E* are first described from these two points; and, as shown in Fig. 31, the bisector drawn through the points of intersection of the arcs is produced until it intersects the horizontal projector in the point *o''*. From the point *o''* as a center and with a radius equal to the distance *o'' D*, the arc *D E* is then described; this

Digitized by Google

operation is shown only on the right-hand side of the front elevation in Fig. 31, but the student will readily see that in order to produce the entire view, the same methods must be pursued on the left-hand side of the figure. In the actual practice of the workshop, however, the draftsman seldom draws more than one-half of such symmetrical figures, since all necessary measurements may be obtained as readily from such views as from the full figure.

The next step consists in bisecting each of the miter lines shown in the side elevation and in projecting their middle points across the surface of the front elevation. The reasons for this work should now be apparent to the student, for it will be seen that a full sectional view of each of the miter lines shown in the side elevation may be considered as an ellipse whose major axis is represented by the length of the corresponding miter line in that view. The respective minor axis is represented in the front elevation by a portion of the horizontal line drawn from the center of the major axis; that is, as much of the line as is included between the arc *E D* and the corresponding left-hand arc. With this information, the construction of the different patterns for the sections of the ventilator is a matter of simple triangulation development. The pattern for the lower section, however, may be laid off by the parallel method, as shown in the view at (*a*); the stretchout for this pattern, of course, is obtained by first dividing the outline of the plan into a convenient number of equal spaces and then drawing edge lines and developers, as explained in preceding problems.

The pattern for one of the remaining sections of the ventilator—the upper section, in this case—is shown in its entire development in Fig. 32. It will be seen that the section *a b C w* in Fig. 32, although in a different position from that shown in Fig. 31, is merely copied in the same size from the latter view; this has been done in order to avoid confusion of lines, and the student is recommended to pursue a similar course in the case of each section of the ventilator. The rhombus-shaped figure *a b C w*, Fig. 32, is

Digitized by Google

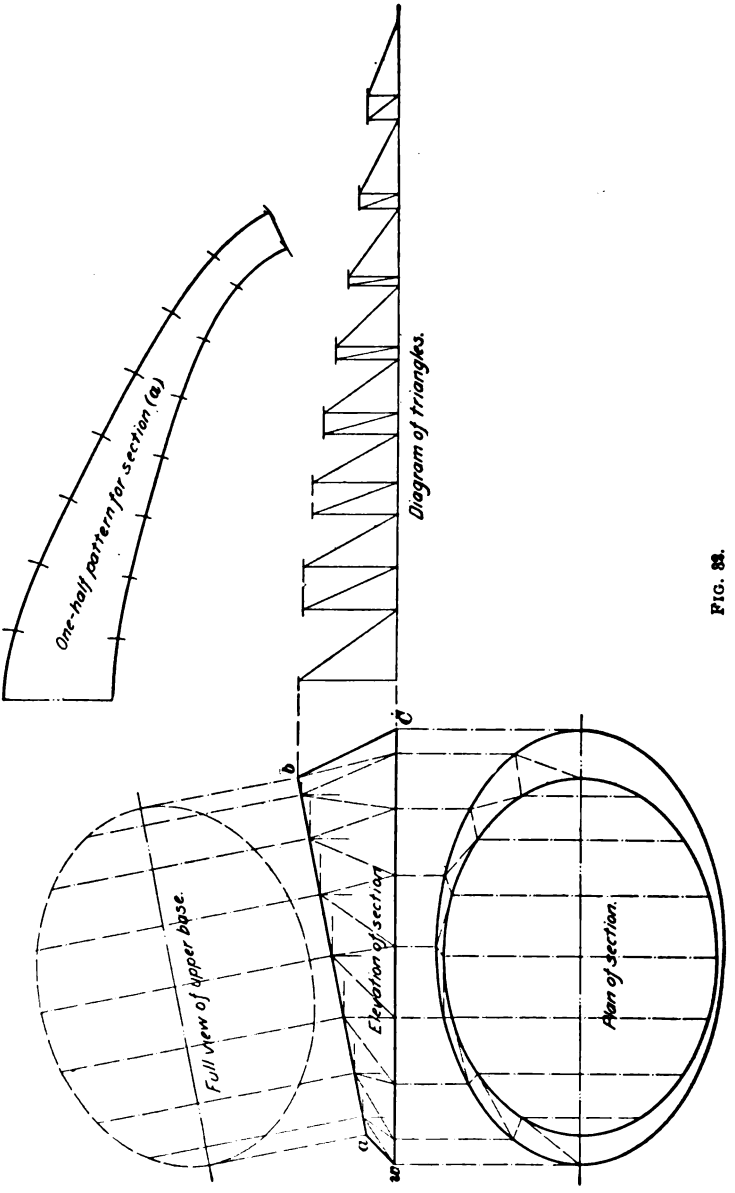


FIG. 32.

Digitized by Google

first copied, as already mentioned, in the position shown; immediately below this view and parallel with the line *w C*, a horizontal line is next drawn for the center line of the plan. On this center line, considered as a major axis, the outer ellipse of the ventilator—the one shown in the front elevation—is next redrawn, as shown in Fig. 32. Perpendiculars to the line *a b* are then erected at points *a* and *b*, and at a convenient distance away from the elevation a center line for the full view of the upper base of the section is drawn parallel to the line *a b* of the elevation. On this line, considered as a major axis, the required ellipse is next constructed, the length of its minor axis being taken from the front elevation of Fig. 31, where it is represented by the line *g h*. When the ellipse that represents the full view of the upper base of the section in Fig. 32 has been constructed, its outline—or, more conveniently, one-half of its outline—is to be divided, by spacing, into a convenient number of equal parts—eight in Fig. 32. The points thus located are next projected to the elevation and thence to the plan, where the foreshortened view of the upper base is next to be represented. One-half of the outline of the lower base in the plan is then divided into the same number of equal spaces as were determined on the half outline of the upper base, and the points thus located are next projected to the line *w C* of the elevation. The surface of the section is then divided into triangles by lines drawn between successive points on the two bases, as in the customary triangulation method of procedure, and the true lengths of such lines are determined by constructing a diagram of triangles, as already explained. The completion of the pattern for one-half of this section of the ventilator is shown at (*a*), Fig. 32, and since the process is precisely similar to that described in preceding problems, no further mention of the principles involved is necessary. A construction similar to that shown in Fig. 32 is needed for each section of the ventilator. While the process is somewhat long and may become tedious to the student, no new features will be encountered, and for this reason further

Digitized by Google

description is omitted. After the patterns for each section have been developed, as shown in Fig. 32 (*a*), the customary allowances for laps, or riveting edges, should be added to the drawing. In a similar manner, the patterns for a ventilator composed of any number of sections may be constructed.

---

PROBLEM 55.

**17. To develop the patterns for a ship ventilator—longitudinal seams.**

EXPLANATION.—Ship ventilators, especially those made of copper, are frequently hammered, or raised, so that the surfaces of the different sections are merged into one continuously curved surface. A ventilator of this description is shown in perspective in Fig. 33, where the joint lines of the various pieces, running along the length of the ventilator, are shown, although faintly, because the joints have been brazed. As in the case of the preceding problem, the development of these patterns is obtained by triangulation. Since the processes of projection are slightly modified from those used in Problem 54, and, further, since the methods used in this case may be used for the development of a number of similar irregularly shaped articles, the student is recommended to follow very carefully the construction here given. The scale of drawings and the general dimensions used in this problem are the same as in Problem 54. In this case, the arcs that were drawn in Fig. 32 in order to locate the points at the extremities of the miter lines will form the outlines of the ventilator; but aside from this feature, the projection drawings in both problems are alike.

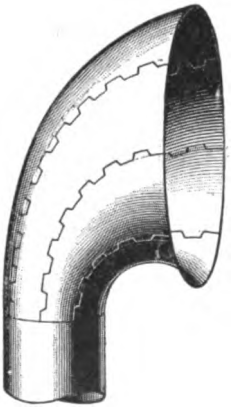

FIG. 33.

Digitized by Google

CONSTRUCTION.—The general arrangement of the views may be seen from Fig. 34—in this case, the front elevation is more conveniently placed to the left of the side elevation. Since the seams are to run in a different direction from those of the preceding problem, all work done in Fig. 32 for the location of the miter lines is omitted. After defining the main outlines of the different views, the first thing to be considered is the manner in which the joint lines of the metal will be indicated in the drawings. Of course, this depends on the number of pieces that are to compose the ventilator; for convenience of illustration, it may be assumed here that the ventilator is to be made up of eight longitudinal strips. For the sake of appearance, each of these pieces should be as nearly the same width as possible, and accordingly the outline of the circles in the plan may be divided into eight equal parts, as shown in Fig. 34. In a similar manner, the outline of the outer ellipse in the front elevation is also divided into the same number of equal parts. Projectors are next carried to the side elevation from the points *a*, *c*, and *e* of the plan, and the points *a'*, *c'*, and *e'* are located on the horizontal side of the right angle *A B C*. Next, the points *b*, *d*, and *f* are located in the side elevation by projection from the dividing points of the ellipse in the front elevation.

The miter lines, or the lines of intersection, between the different sections are next represented in the side elevation. In this view, the student may draw these lines freehand, carefully observing that the different sections widen gradually as they approach the outer end of the ventilator. He should understand that although these lines may be drawn at will on the surface of the side elevation, and although their positions may be shifted until a pleasing curve is obtained, yet when the lines are finally drawn in that view, they represent a definite position—a position, in this case, in which the true lengths of the lines are not shown in the side elevation. This will be better understood by the student when he considers that the line *c' d'*, for instance, is gradually bending toward the eye of the observer and at the same



Digitized by Google

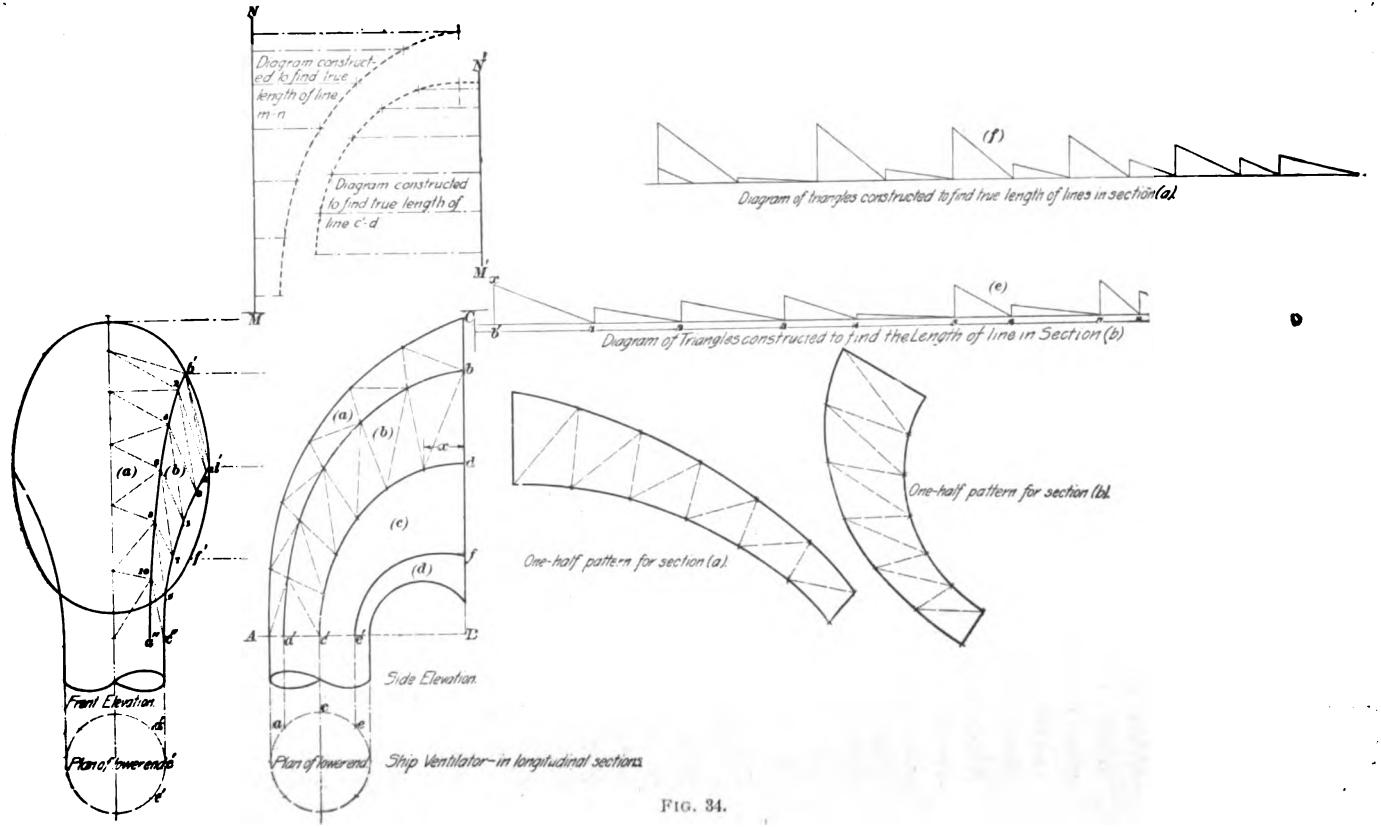


FIG. 34.

Digitized by Google

time toward the right; in short, the line $c'\ d$ of the side elevation represents the curved line $c''\ d'$ of the front elevation. The curve of the other lines—$a'\ b$ and $e'\ f$—bends in a somewhat similar manner, as may be seen in the side elevation.

The line $a'\ b$ of the side elevation is next drawn in the front view; its upper and lower extremities, of course, may be readily located by projection, and, if desired, the entire line may be drawn freehand, with due regard to the gradual curvature. The student will be assisted in the drawing of this line, if he first divides the line $a'\ b$ of the side elevation into a convenient number of equal spaces—six in Fig. 34—and then draws horizontal projectors of indefinite length across the surface of the front elevation. The vertical center line of the front elevation represents the outer curve $A\ C$ of the side elevation, and that curve may be divided into the same number of equal spaces as were laid off on the line $a'\ b$. A similar operation is then performed on the line $c'\ d$, and from both of these curves, projectors are carried to their respective lines in the front elevation. The work of dividing the surfaces of the two upper sections of the ventilator into triangles, which is done by drawing lines between successive points on the different miter lines, is shown in Fig. 34; and since it is similar to other operations that have been described, no explanation is given.

The true lengths of the curves $a'\ b$ and $c'\ d$ must next be determined; this is done by laying off the stretchouts $M\ N$ and $M'\ N'$ in the relative positions shown in Fig. 34 and in accordance with the distances found on the lines $a''\ b'$ and $c''\ d'$ in the front elevation. Edge lines are then drawn through the points of the stretchouts and developers are drawn from the respective points on the outlines of the foreshortened curves in the side elevation. If desired, the curves shown by the dotted lines in the upper diagrams may then be drawn, and the true measurements for such distances as are located on the lines of intersection may be taken from these views for the construction of the patterns, when such measurements are required. Before the patterns

Digitized by Google

can be laid out, however, the true lengths of the longer sides of the triangles in the elevations must first be determined. Since in this case the method pursued is slightly different from that heretofore shown, the student should carefully follow the instructions given.

It has already been observed, in preceding triangulation problems, that in order to obtain these true lengths it is necessary merely to construct right-angled triangles whose bases are equal, respectively, to the length of any given line in a view, while the height of the triangle is equal to the vertical height shown in a related view. The same method is to be pursued here, but in this case the matter of obtaining the vertical height is somewhat more complicated, from the fact that the drawing affords no clearly defined base measurement. Just what is meant by this statement will be seen by the student as he proceeds with the construction of the temporary triangles for the section marked (*b*) in Fig. 34. For this construction, the measurements for the bases of the temporary triangles may be taken from the front elevation, and the measurements for the vertical heights from the side elevation. Accordingly, a horizontal line of indefinite length may be drawn in any convenient portion of the drawing, as at (*e*). On this line, commencing at the left-hand end, lay off a distance equal to *b' 1* of the front elevation, and make the succeeding spaces toward the right of the line equal those designated by similar numerals in the front elevation. The spaces thus laid off on the line at (*e*) are to represent the bases of the temporary triangles, whose altitudes may be found by measuring the respective horizontal distances shown in the side elevation. Thus, the altitude of the triangle at the left is made equivalent to the dimension *x* of the side elevation. In like manner, the heights of the remaining triangles are taken from the side elevation, and, when completed, the pattern for the section may be laid out in the regular way, as shown in Fig. 34. The diagram of triangles necessary for the construction of the pattern for the section (*a*) is shown at (*f*) and is constructed in a similar manner.

Digitized by Google

A like process must be followed in order to obtain patterns for sections of the ventilator marked (*c*) and (*d*) in Fig. 34, but since this work is the same as that already shown, no further description is needed. The student will seldom be called upon to develop patterns for objects that require such extended operations, but he should become thoroughly familiar with the principles involved and should endeavor to acquire a facility in the application of the processes. No more excellent drill for the ambitious pattern draftsman can be found than is presented in the present instance, and the student will do well to develop the entire surface of the ventilator shown in this problem. After the drawings have been completed, the work can be readily proved by cutting out and forming into shape blanks cut to the pattern outlines; this part of the work will furnish the student with interesting information, and, if found correct, will tend to increase his self-confidence in a large degree.

---

PROBLEM 56.

**18. To develop the patterns for the body of a wheelbarrow.**

EXPLANATION.—Wheelbarrows made entirely of metal are rapidly coming into favor. Formerly used only around smelters, blast furnaces, and foundries, they are now to be found in nearly every place where a barrow is required. Of course, they are made in a great variety of shapes and styles, and of light or heavy metal, as may be necessary for different purposes. Fig. 35 is a perspective view of a common type of metal wheelbarrow and shows one of the reasons why this barrow is so favorably regarded. Owing to the peculiar shape of the body, the laborer is enabled to load the barrow in such a manner that, when raised into position to be moved, the center of gravity of the mass will be very nearly over the wheel. The barrow may, therefore, be pushed along with much less effort than if the laborer were required to carry more of the weight of the

Digitized by Google

contents. These shapes are more easily worked out in sheet metal than in wood; furthermore, a water-tight body may be easily obtained, and, in addition, hot ashes or slag may be carried without danger of burning the wheelbarrow.

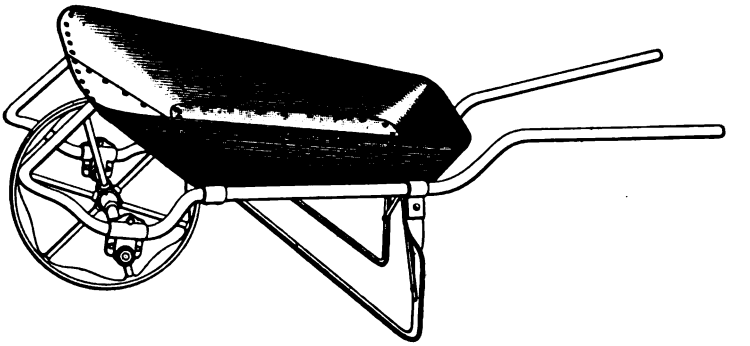

FIG. 35.

The drawings for this problem are to be constructed to a scale of $1\frac{1}{2}$ inches to the foot. The flat portion of the body—that is, the bottom of this wheelbarrow—is 10 inches in width by 16 inches in length; the sides are inclined at an angle of 45° to the horizontal, and the length of slope at the front—that is, nearest the wheel—is 13 inches, while at the rear the length of slope is 5 inches.

CONSTRUCTION.—A plan and an elevation will be required for the development of the necessary patterns; the latter is the first to be drawn, as shown in Fig. 36, in accordance with the dimensions previously given. After the rhombus shown by the full lines in the elevation, Fig. 36, has been constructed, a projection of the flat portion of the body of the wheelbarrow should be made in the plan, but, before the outline of the upper base can be represented in that view, some preliminary work will be necessary in the elevation. Before this work is undertaken, the student should examine the form assumed in this drawing—he should at once see that the rounded corners of the solid represented in the elevation may be considered as irregular sections of the cone, and that only a portion of the surface of one-quarter of the

Digitized by Google

cone is needed at each corner of the solid. The conic segments are, of course, shown in the elevation as inverted; and it will be further seen, on examining the drawing and allowing the imagination to develop the picture, that the upper outline of the elevation crosses the axes of the conic segments obliquely. Since this is the case, the projection of the plan will involve the principles exemplified in the projection of sectional views of a cone given in *Practical Projection.*

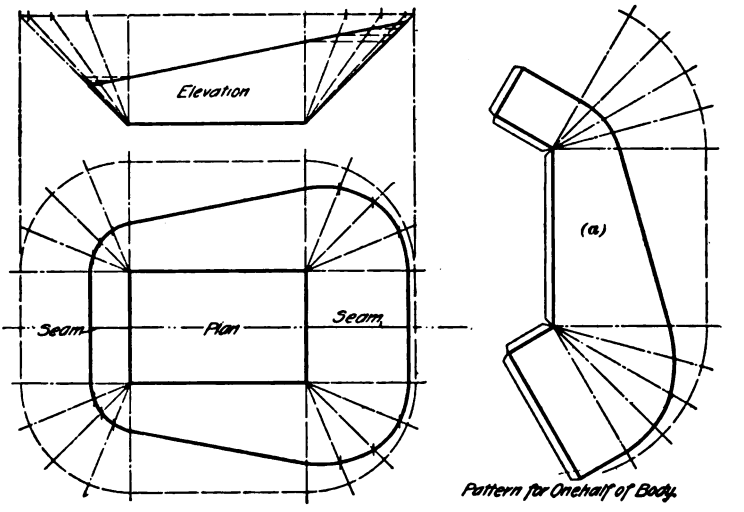


FIG. 36.

The first step in making this pattern will consist in producing the oblique sides of the elevation until they intersect a horizontal line that may be conveniently drawn a slight distance above the upper outline of the elevation. The projection is thence made to the plan, as shown in Fig. 36, and the quarter circles, or quadrants, that represent the outlines of the assumed bases of the conic segments may be described from centers located at the four corners of the rectangle in the plan. These quadrants are divided, by spacing, into any convenient number of equal parts—four in Fig. 36—and the elements of each conic segment are

Digitized by Google

represented in the plan in the usual way. These elements are next projected to the elevation, and, when represented in that view, will at once indicate their points of intersection with the upper outline of the body. From such points of intersection, horizontal projectors are then to be carried to the respective true edge line. If desired, the plan may then be completed as shown in Fig. 36, although this part of the work is not necessary for the development of the pattern.

The development of the pattern at (*a*) is now a comparatively simple matter. A horizontal center line may be drawn through the plan, and the seams between the different portions of the body may conveniently be located on this line, although any other arrangement may be readily effected, if desired by the draftsman. Since the remainder of the work is identical with that already shown in preceding problems relating to the radial solids, no further explanation of the process is necessary.

---

PROBLEM 57.

**19. To develop the pattern for a conveyor flight.**

EXPLANATION.—A method of automatically transferring grains and similar substances is frequently required in elevators, malt houses, breweries, and flouring mills. This requirement is met, in many instances, by the use of an endless chain to which several small buckets are attached. The motion of the chain automatically fills the buckets at one end of the apparatus and discharges their contents at the other. In recent years, however, this device has been superseded, to a great extent, by the suction tube, or spiral conveyor, which type is especially desirable in cases where small grains are to be conveyed and where no spilling can be permitted. This conveyor consists, essentially, of a tube of heavy sheet metal within which a shaft, whose axis coincides with that of the tube, is suspended in bearings placed at frequent intervals throughout its length. Attached to

Digitized by Google

this shaft are spiral, or rather helicoidal, flanges of such width that their outer edges approach very closely to the inner walls of the enclosing tube. The shafting and the attached flanges run the entire length of the tube, and when the shaft is revolved in a certain direction—one end of the tube being set into the grain—it is found that the grain follows the spiral surface of the flanges and may be elevated at a more or less oblique angle.

This conveyor is merely an adaptation of a device constructed by one of the old Greek philosophers, Archimedes, whose name is still attached to the pump shown in Fig. 37. This pump is sometimes made by winding a flexible tube spirally around the outer surface of a cylinder. The axis of the cylinder is then inclined and its lower end inserted in a tub of water. On turning the handle of the pump, water will issue from the upper end of the spiral tube, apparently being lifted by the motion of the cylinder, although in reality the water merely obeys the universal law that requires it to seek its lowest level. That this is true may be seen when the action of the water at any particular place in the tube is considered; the motion of the tube being apparently upwards, the water really flows back, but in so doing is carried away from the tub, and following the contour of the flanges, issues from the free end of the tube.

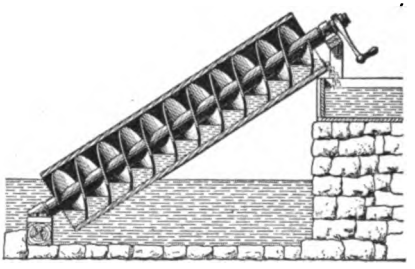

FIG. 37.

The section of a grain conveyor made to operate on this principle would not differ materially from that shown in Fig. 37. The separate pieces of which this continuous flange is composed, termed *flights* by the manufacturers, are joined along seams perpendicular to the axis of the shaft. The theory of their construction affords an interesting study for the sheet-metal worker. If a right-angled triangle, Fig. 38(*a*), whose base is equal in length to the circumference of a

Digitized by Google

cylinder and whose altitude is the longitudinal distance to be passed through, be wrapped around a cylinder as in Fig. 38 (*b*), the curved line described by the hypotenuse of the triangle will be a *helix*. A familiar practical illustration of this curve may be seen in the threads of the screw or in the winding spiral staircase so often seen in the public libraries of our cities. The method used by the draftsman for constructing these curves on the drawing board was shown in *Geometrical Drawing*, but will be repeated during the construction of the projections required for this problem. It is a purely geometrical construction and as such should be thoroughly mastered by the student. The surface of the

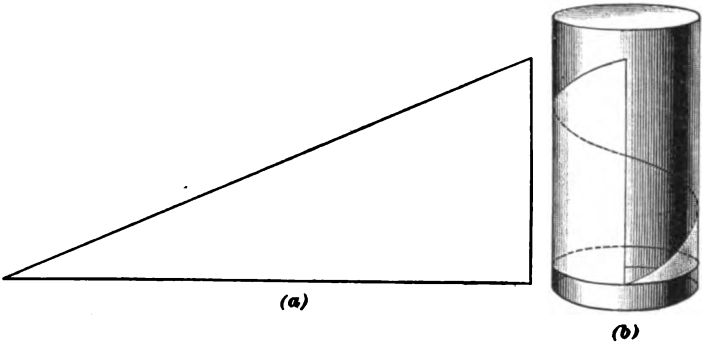


FIG. 38.

conveyor flight is referred to by mathematicians as helicoidal, and as will be seen from the drawings now to be made, is such as would be developed by a straight line that is at all times held perpendicular to the axis of the cylinder, but yet is constantly moving upwards along the line of the helix. Further explanation of the principles involved will be given during the construction of the drawings. For the purposes of this problem, it may be assumed that the conveyor tube is 12 inches in inside diameter, and that the shaft on which the flights are to be fitted is 2 inches in diameter. The helix is to make a full turn in a length of 6 inches, and the drawings are to be constructed to a scale of 6 inches to the foot.

Digitized by Google

CONSTRUCTION.—A plan and an elevation of the helicoid is first to be drawn, as shown in Fig. 39. Circles are first described in the plan from a common center and with radii equal, respectively, to the radii of the shaft and of the tube. The outlines of these circles are next divided, by spacing, into any convenient number of equal parts—in this case six spaces are located on each semicircle. For the construction of the elevation, a parallelogram *A B C D* is drawn whose width is projected from the plan and whose height is equivalent to the length of the turn—6 inches in this case. One of the vertical sides of this parallelogram is next divided, by spacing, into as many equal parts (12) as are contained on the outline of the entire circle in the plan. Through the points thus located, horizontal lines are drawn entirely across the parallelogram, and, beginning at the extreme left-hand point on the outer circle, projectors are next carried from the plan to the successively higher horizontals in the elevation; that is, the point *C* being already fixed by one of the projectors previously drawn, the point *1* in the plan is projected to the point *1'* on the horizontal next higher than *C D*; point *2* of the plan, to the point *2'* in the elevation; and so on, proceeding in this way until the point *A* at the top of the rectangle is reached. An irregular curve is then traced through the points thus located in the elevation, and it will be seen that such a curve defines the outer edge of the helicoid. The curve that defines the inner edge of the helicoid is drawn through points located on the same horizontal lines—such points being projected from points located on the outline of the inner circle of the plan. The lines *A x* and *C y*, Fig. 39, define the upper and lower extremities of the flight, and on comparing the drawing just made with the perspective shown in Fig. 37, the student will be able to understand what portions of the surface should be represented by dotted lines in the projection drawings. It might appear to one studying these drawings only in a casual way, that the surface represented in Fig. 39 could be developed by the method of triangulation, for it will be seen that the straight-edge test, mentioned in *Development of Surfaces*, would

Digitized by Google

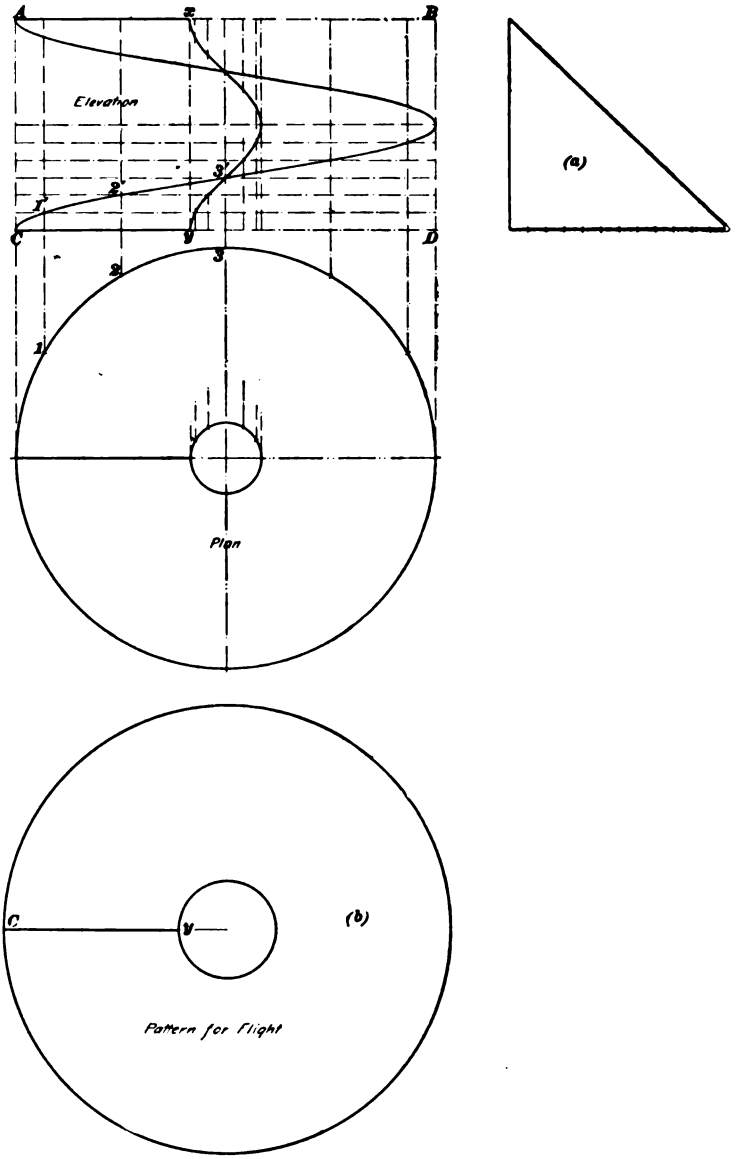


FIG. 39.

Digitized by Google

show continuous contact at any point when the straightedge was perpendicular to the common central axis. As a matter of fact, however, a theoretical development for this surface is impossible—this particular case being the exception to the straightedge test mentioned in *Development of Surfaces*—although it is true that an approximation sufficiently close for all practical purposes may be readily made.

Two methods of pattern construction will be given in this case, the first of which is somewhat more simple than the second, and is sufficiently close for nearly every practical application; the second method is shown only as affording a brief explanation of the reason for the failure of the triangulation method of development in the case of helicoidal surfaces. Since the curve of the helix, as previously stated, may be represented by wrapping a right-angled triangle of certain dimensions around the circumscribed cylinder, it is possible, by means of a reversal of this method, to construct a right-angled triangle whose hypotenuse will be equal to the exact length of the helix. Accordingly, the right-angled triangle shown at the right of the elevation in Fig. 39 is laid out. The altitude of this triangle is projected from the elevation, and the base is spaced off in accordance with the length of the circumference of the inner circle of the plan. The hypotenuse of this triangle may now be measured with the scale, and from the table of Areas and Circumferences it will be possible to ascertain the diameter of a circle whose circumference very nearly approaches this length. The hypotenuse of the triangle shown at Fig. 39 (*a*) is found to scale very nearly 8¾ inches, which is equivalent to the circumference of a circle whose diameter is approximately 2¾ inches. A circle of this diameter is accordingly described, as shown in Fig. 39 (*b*). A radius of the circle is next drawn in any convenient direction and is extended indefinitely beyond the outline of the circumference; on the outer portion of this radius a distance is then laid off corresponding in length to the distance *C y* of the elevation. A concentric circle is then described and the pattern is complete. When cutting out the metal, the central circle is cut out and

Digitized by Google

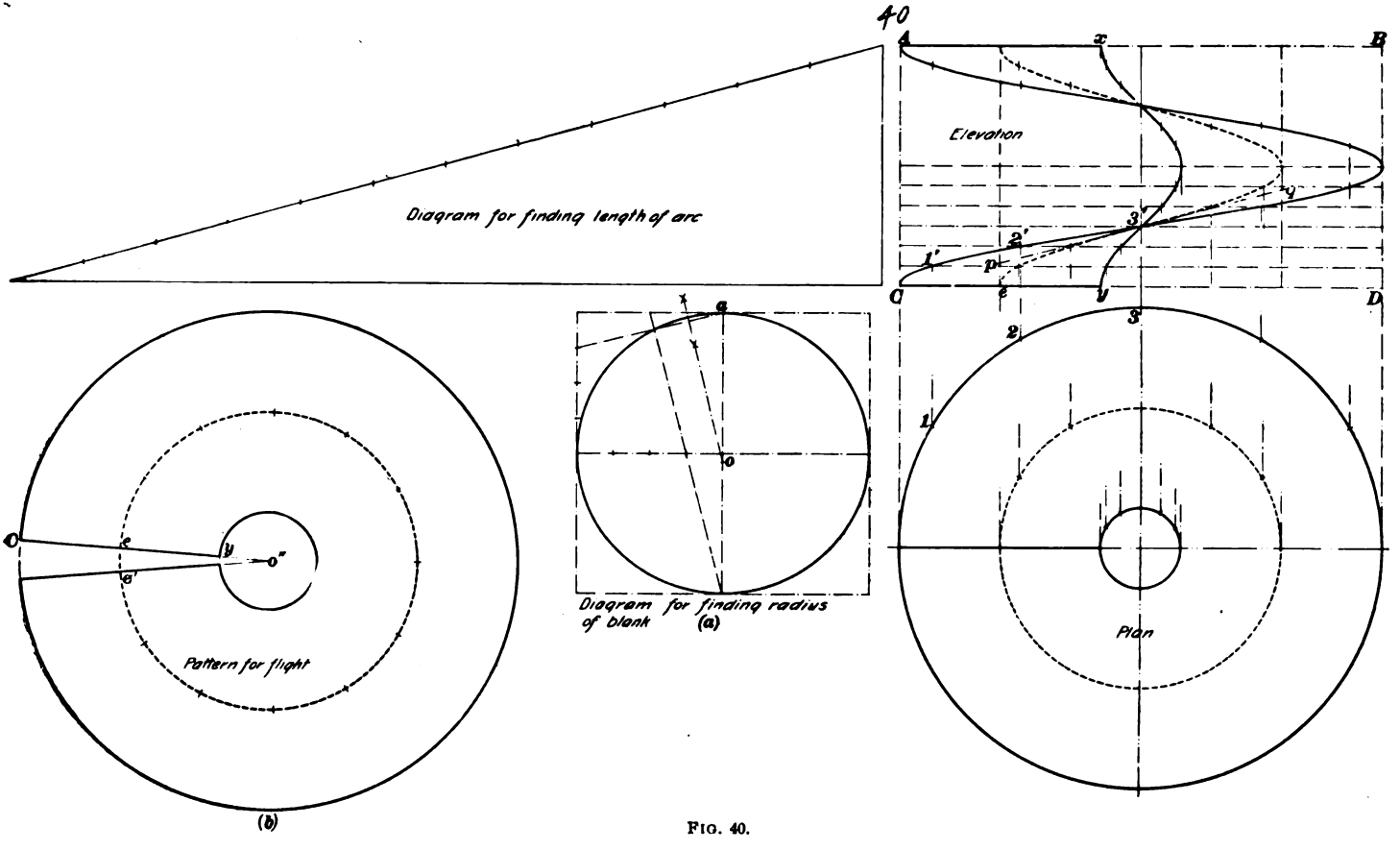


FIG. 40.

Digitized by Google

removed, and a cut is also made along the line of the radius $Cy$ of the outer circle. Before this blank can be utilized in the construction of a conveyor, it must be stretched, or "raised," by dies or by hand methods known to every sheet-metal worker.

A method of development that more closely approximates the theoretical standpoint, but one that is seldom used in practice on account of the waste of stock involved, is shown in Fig. 40. By this method it is first necessary to construct an additional helix that will follow the central line of the helicoidal surface. The plan and elevation of Fig. 39 have been reproduced in Fig. 40, and the central line of the surface is shown by the dotted circle in the plan. As in the preceding drawing, the projection of this line to the elevation is done by the use of the same horizontal lines, and the helix is indicated in the elevation by the dotted line there shown. The correct length of this line is next determined by the aid of the right-angled triangle shown at the left of the elevation. The process is the same as in the other method and needs no further explanation. If the drawings are now carefully studied, it may be seen that the true length of the curve, as well as its approximate outline, will be very nearly approached by the flattest portion of the curve of an ellipse whose minor axis is equal to the diameter of the circumscribed cylinder and whose major axis is equal to the length of a tangent to the helix—the ends of such tangent being defined in the elevation by the lateral outlines of the circumscribed cylinder. This tangent is indicated in Fig. 40 by the line $pq$, which, as will be seen from the illustration, is drawn tangent to the dotted central helix.

This curve may be readily found if the ellipse shown at ($a$), Fig. 40, is constructed in accordance with the dimensions just given. The required radius $oa$ may then be taken from the drawing, and, with this radius, a circle is next to be described, as shown at ($b$). The hypotenuse of the right-angled triangle shown at the left of the elevation may then be divided, by spacing, into any convenient number of equal parts, and a similar number of spaces set off on the outline

Digitized by Google

of the circle at (*b*). The spaces *c y* and *C e* are then taken from the elevation and set off on a radius of this circle in the manner shown in Fig. 40 (*b*), and concentric circles are next described for the inner and outer outlines of the flight. A radius drawn through the point *e'* will then define the remaining outline of the pattern. As in the other method, the pattern must be submitted to the raising process, and for the reason that an equal amount of work must be done by either method, the one first described will be found better adapted to practical shop requirements. If the student desires to investigate the properties of this surface somewhat further and will construct right-angled triangles for the purpose of ascertaining the respective lengths of the different helixes shown, or of additional helixes that may be defined on the surface of the helicoid, he may compare the lengths of their hypotenuses with the relative positions on the pattern, and thus understand exactly where the surface of the flight should be stretched. This problem presents an interesting case for one of an inquiring turn of mind; and if, in addition to the construction here given, the student will produce a triangulation development for the flight and compare that figure with the different hypotenuses of triangles constructed for several positions of the helix, he will be able to understand why the triangulation process cannot be used for surfaces of this class.

---

PROBLEM 58.

**20. To develop the patterns for a special case of irregular intersection.**

EXPLANATION.—This problem illustrates a method of adapting the line of intersection between two solids to suit specified requirements. It represents a case in which the miter line, although apparently arbitrarily represented in the projection drawings, is really dependent for certain points of its location on well-known laws that govern the intersection of solids. This statement is, in a large measure,

Digitized by Google

true of every drawing that contains an arbitrary miter line. For before the draftsman can trust his judgment in planning such lines on the drawing, he must be familiar with the appearance of intersections of common occurrence and must be able to recognize the likeness of such arbitrary lines to the true miter lines obtained by projection. This case requires a transition piece whose general appearance will resemble the frustum of a cone. The upper base of the transition piece is in the form of a circle 9 inches in diameter; its surface, for the purposes of this problem, may be assumed to be horizontal. The lower base of the transition piece is on the surface of a cylinder 2 feet 8 inches in diameter, whose axis is horizontal. The relative positions of the circle and of the cylinder are such that a perpendicular erected at the center of the upper base will pass through a point on the axis of the cylinder, while the perpendicular distance between the two bases, as shown in an elevation, is 8 inches. Furthermore, it is required that the slanting sides of the transition piece, as shown in an end elevation of the intersected cylinder, will be tangent to the outline of that solid; while in a side elevation, the greatest lateral distance must be 2 feet 5 inches. The perspective illustration in Fig. 41 represents these conditions very accurately, and the close resemblance of the transition piece to the general form of a cone is readily apparent. This construction should be followed very closely by the student, since this method may be used in a variety of similar cases. The drawings are to be made to a scale

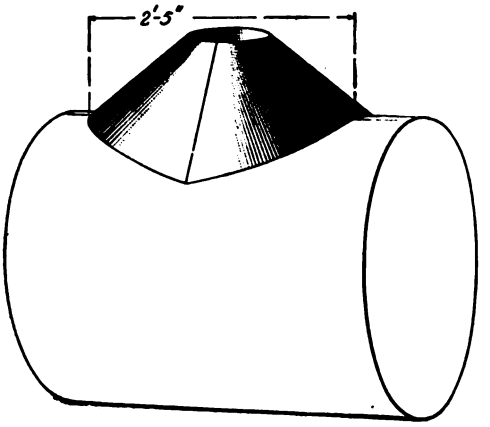


FIG. 41.



Digitized by Google

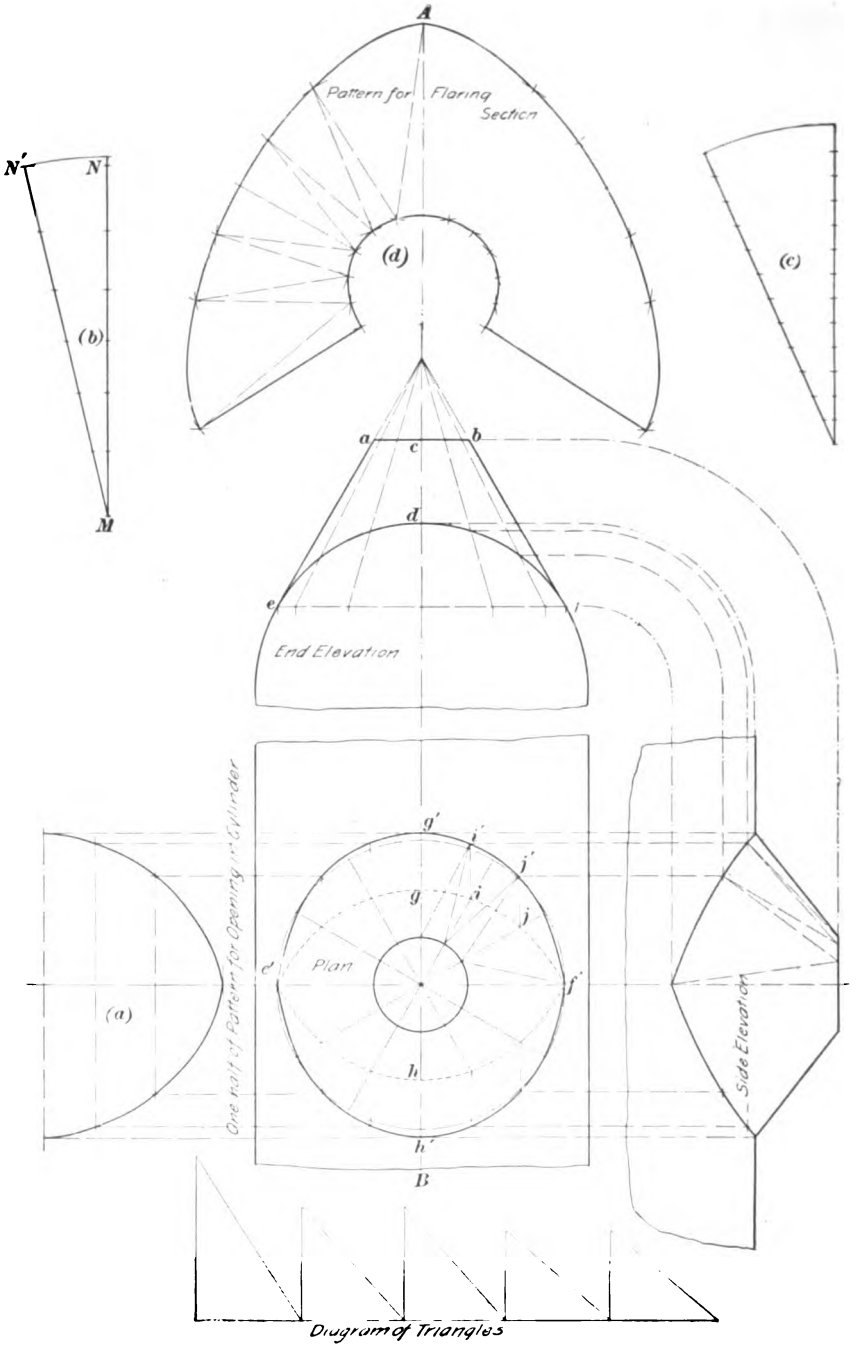


FIG. 42.

Digitized by Google

of 1½ inches to the foot, and are rendered somewhat complicated by the fact that ⅝-inch material is to be used in the construction of the finished forms. The patterns for the transition piece and for the opening in the cylinder are to be developed.

CONSTRUCTION.—As shown in Fig. 42, projections consisting of a plan and of end and side elevations are first to be drawn. The usual arrangement of views given in *Practical Projection* may be followed and the end elevation first constructed. Draw the vertical center line *A B* and represent the edge view of the upper base by a line *a b* 9 inches long and perpendicular to the center line. Set off the distance *c d* in accordance with the specifications and then describe, in the elevation, the circle that represents the end view of the cylinder. From the points *a* and *b* draw the lateral outlines of the transition piece tangent to the outline of the cylinder. Next, draw the dotted line *e f* and project the top view in the plan as though the surface of the transition piece were actually that of a right cone. The true line of intersection in the plan may then be found by projecting the conic elements in both views. This line of intersection is represented in the plan of Fig. 42 by the irregular dotted curve there shown.

On measuring the greatest width in a side elevation—the distance *g h*, Fig. 42—it is found to scale 1 foot 7 inches, while the specifications require a measurement of 2 feet 5 inches along this line. Assuming that the points *e* and *f* remain where they are, it follows that the points *g* and *h* must be separated sufficiently to comply with the specifications. This amount is the difference between 2 feet 5 inches and 1 foot 7 inches, or 10 inches. Accordingly, the points *g'* and *h'* are laid off in the plan as shown, thus fixing the points for the projection of the side elevation. The remaining points *i* and *j* may now be moved along vertical lines a similar distance; or, if desired, the new miter line may be drawn freehand, being made to approach the point *f'* of the plan by an easy and gradual curve, not unlike that shown in Fig. 42. The horizontal center line

Digitized by Google

shown in Fig. 42 should now be drawn through the plan and the side elevation projected. It will be seen that the act of moving the points $g$, $i$, and $j$ has not affected the end elevation, since the movement in each case has been made along vertical lines. After the side elevation has been projected, the surface of the transition piece in that view and in the plan may be divided into triangles for the purpose of development by the customary method of drawing lines between successive points on the outlines of both bases. The true lengths of these lines are then determined from a diagram of triangles in the manner shown.

Before the pattern for the surface of the transition piece can be laid out, the pattern for the opening in the intersected cylinder must be developed. This is necessary in order to obtain the true lengths of the distances between points $g'$, $i'$, $j'$, and $f'$ in the plan. This pattern is shown at ($a$), and is laid out by the parallel method. It is first necessary, however, to allow for thickness of material; accordingly, the arc $e\,d\,f$ in the end elevation must be measured in order to ascertain what fractional part of the entire circumference is represented in its length. On spacing its length with the dividers and laying off a similar distance along the straight line $M\,N$, it is found to scale, approximately, 33.5 inches. Since the full circumference of a circle 2 feet 8 inches in diameter is 100.5 inches, and since seven times $\frac{3}{8}$ inches, or $\frac{21}{8}$ inches, is allowed for the thickness of material in the entire cylinder, it is evident that $\frac{33.5}{100.5}$, or about one-third of $\frac{21}{8}$ inches, which is equivalent to $\frac{7}{8}$ inch, is needed for the allowance in the arc $e\,d\,f$. This amount is added as shown at Fig. 42 ($b$), and the resulting stretchout $M\,N'$ is then copied at ($a$) for the development of the pattern for the opening. The spaces for the lower base of the transition piece required for the construction of the triangulation development at ($d$) are to be taken from the outline of the pattern at ($a$); and, as shown at ($c$), another stretchout must be laid out in order to ascertain the allowance for thickness of material required at the upper

Digitized by Google

base. These constructions having already been explained need not be further exemplified here. The pattern at (*d*) is now to be constructed by the triangulation method already familiar to the student. A correct model will be found to coincide exactly with the preceding specifications.

---

PROBLEM 59.

**21. To develop the patterns for a pyramid intersected by a cylinder.**

EXPLANATION.—The relative situation of the two solids whose development is to be undertaken in this problem is shown in perspective in Fig. 43. A quadrangular pyramid, whose sides form an angle of 30° with its axis and whose base is to be represented in the plan by a square measuring 16 inches on a side, intersects a cylinder 10 inches in diameter in such a manner that the axes of the two solids coincide. Examples of such constructions are occasionally encountered in the cases of small stacks or in the construction of hoods provided with cylindrical outlets. As in nearly every pattern development, the principal feature of the drawing consists in first correctly ascertaining the true position of the line of intersection between the two solids. After this line has been found, the development of the cylinder is easily made in accordance with the parallel method and of the pyramid by the radial method. The drawings are to be made to a scale of 1½ inches to the foot.

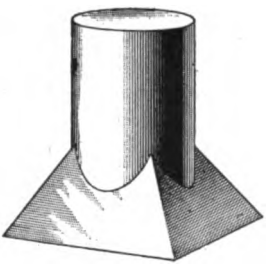

FIG. 43.

CONSTRUCTION.—Draw the plan first, in accordance with the dimensions previously given, as shown in Fig. 44. The outlines of the pyramid are next projected to the elevation, where they are extended to the vertex *O*. The lateral outlines of the cylinder are also projected in the elevation;

Digitized by Google

next, in the plan, the circle that represents the outline of the cylinder is divided, by spacing, into a convenient number of equal parts. These spaces should be so arranged

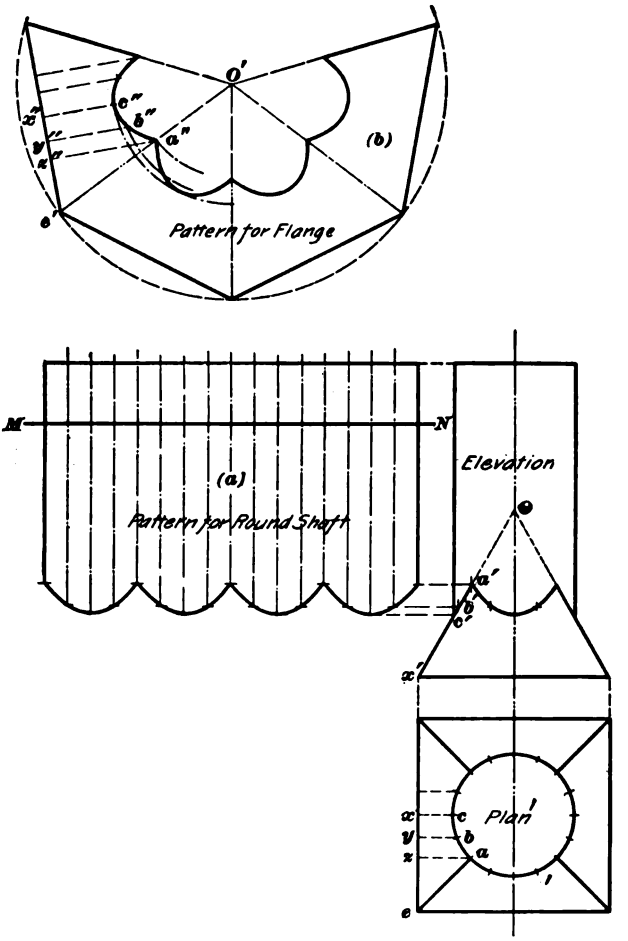


FIG. 44.

that points will fall on the outline of the circle at the crossing points of the edges of the pyramid; this result will be accomplished if the circumference is divided, as shown in

Digitized by Google

Fig. 44, into sixteen equal spaces. The points of the plan indicated by the letters *a*, *b*, and *c* are next projected to their respective places on the outline of the pyramid in the elevation at *a'*, *b'*, and *c'*. Through points at the intersection of horizontal projectors from *b'* and *c'* with vertical projectors drawn from the plan, the curved line of intersection, shown on the front surface of the pyramid, is next drawn. The development of the surface of the intersecting cylinder is then made in the usual way by the parallel method, as in Fig. 44 (*a*).

The development of the surface of the pyramid, as shown at (*b*), is obtained by the radial method. Its surfaces should first be laid off in the pattern as though the development of the entire pyramid were required; a separate operation is then necessary to determine the outline at the upper portion of the solid—that is, at the intersection with the cylinder—as will be immediately explained. From the points *a*, *b*, and *c* of the plan, or from any similarly situated points on the outline of the cylinder, perpendiculars are to be drawn to the nearest base line of the pyramid, as *c x*, *b y*, etc., Fig. 44. The points *x*, *y*, and *z* are then located in the drawing at (*b*) by transferring with the dividers the distances *e z*, *e y*, and *e x* from the plan to their corresponding positions at *e' z''*, *e' y''*, and *e' x''*. This work would naturally be required on each of the surfaces of the pyramid, since it is clear from the projection drawings that the amount of intersection on each surface is equal to that on the others; but the process may be somewhat shortened if these spaces are transferred to but one of the surfaces, as shown in the drawing at (*b*). Accordingly, perpendiculars to the base line of the pattern are erected at the points *z''*, *y''*, *x''*, and at the two similar points above. Points through which the curved outline of the pattern may then be traced are determined by making *x'' c''* at (*b*) equal to the distance *x' c'* of the elevation, *y'' b''* at (*b*) equal to *x' b'* of the elevation, etc. If the figure has been accurately drawn, the distance *x' a'* of the elevation will be found to coincide exactly with the length of the perpendicular erected at *z''*, as defined by

Digitized by Google

its intersection with the edge line $O'\ e'$. In order to transfer the positions $a''$, $b''$, and $c''$ to their corresponding locations on the remaining surfaces of the pyramid, arcs may conveniently be described from $O'$ as a center and with radii $O'\ a''$, $O'\ b''$, and $O'\ c''$, as shown. The positions of these points may then be determined by stepping off distances with the dividers from the various edge lines of the pyramid and the desired curves traced through the points thus located.

---

**PROBLEM 60.**

**22. To develop the patterns for an octagonal urn.**

EXPLANATION.—A perspective view of this urn is given in Fig. 45, and while the class of work it represents more properly belongs under the general subject of molding developments, other workers in sheet metal are occasionally required to obtain the patterns for such forms. The principles used in the construction of these patterns are merely those of the parallel method, and, in the drawing of the required views, the student will obtain desirable practice that cannot fail to be of assistance to him in his daily work. The case in hand represents an octagonal urn, but from the description given, it will be made clear that with slight modifications of the drawing, a figure of any desired number of sides can easily be produced. The drawings for this problem may be made to a scale of 3 inches to the foot. The heights shown, respectively, at $A$, $B$, and $C$, Fig. 46, are 4, 7, and 5 inches; and the widths represented by the dimensions $E$, $F$, and $G$ are 11, 5, and 10 inches. The outlines for the figure in the

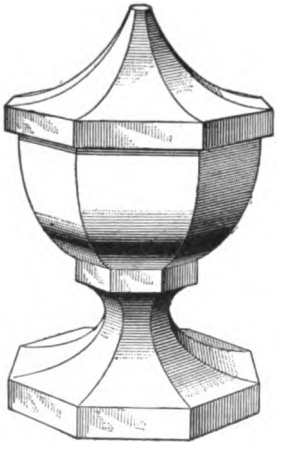

FIG. 45.

Digitized by Google

elevation are to be drawn freehand, after the principal dimensions given are laid off, and they should approximate the curves in the perspective view as closely as possible. This construction should be carefully followed, since the principles contained are important to the student and are in frequent use in a variety of the sheet-metal-working trades.

CONSTRUCTION.—Draw the vertical center line for the projection of the plan and the elevation, as shown in Fig. 46, and then construct the octagon shown in the plan in accordance with the greatest width mentioned in the specifications; that is, its diameter must be 11 inches, as measured on a horizontal or on a vertical center line. The elevation may then be drawn as before directed, although the square members of the urn may be drawn by the aid of the T square and triangles. Only the outlines of the elevation should be drawn by this method, since the miter lines shown in the central portion of the view in Fig. 46 are to be drawn through points projected in a particular manner. In actual shop practice, these lines—which are really foreshortened miter lines—are usually omitted, since they contribute in no way to that part of the drawing needed for the development of the pattern. Each angle of the octagonal figure in the plan is next bisected, and the bisectors produced until they meet in the center of the octagon. The curved portions of the outline on one

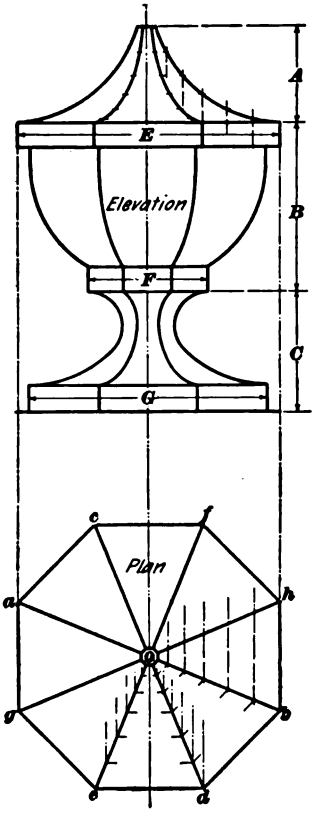


FIG. 46.

Digitized by Google

side of the elevation may now be divided, by spacing, into any convenient number of equal parts, as shown in Fig. 46, and projectors drawn to the line *a b* of the plan. Horizontal projectors from these same points in the elevation are also drawn across the surface of that view. Next, projectors parallel to *b d* are drawn in the plan from points on the line *a b* to corresponding positions on the lines *c d* and *e f*. The foreshortened miter lines are then drawn in the elevation through intersections of the horizontal projectors previously mentioned with projectors drawn from the points of the plan on the lines *c d* and *e f*. The elevation shown in Fig. 46 is thus completed, and it should be noted by the student that a similar process must be followed in all cases where a projection drawing requiring the representation of foreshortened miter lines is to be produced.

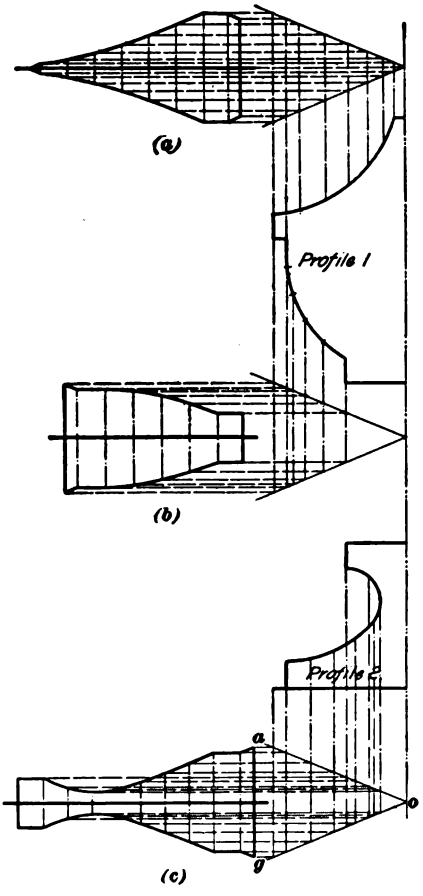


FIG. 47.

As already mentioned, however, the draftsman that wants pattern developments merely seldom goes through the rather extended operations that have just been described. The customary shop drawings are shown in Fig. 47, and their connection with the projections just drawn will be apparent to the student after a

Digitized by Google

little study. The center line shown in Fig. 47 is first drawn, and, in order to avoid confusion arising from a number of lines crossing one another on the drawing, the elevation of the urn is conveniently separated into two segments designated, respectively, Profile No. 1 and Profile No. 2, Fig. 47. It will be seen from Fig. 46 that the urn is composed of eight segments, each segment being represented in the plan by the amount of material included within the sides of one of the angles at the center of the octagon; that is, within one of the angles *h o b*, *a o g*, etc. Since these angles are all alike, it is clear that for the development of the pattern it will be necessary to produce but one of them in Fig. 47, and from instruction already given under the heading "Development by Parallel Lines" in *Development of Surfaces*, it will be further seen that the angle represented in Fig. 47 must be in the position shown at *a o g*. For the purpose of simplifying the drawing, three of these angles may be copied from Fig. 46 and placed in the relative positions shown in Fig. 47. Note that one of these angles is placed above and one below the drawing of Profile No. 1 in order to avoid the complication that would ensue from the crossing of edge lines in that view. After the profiles have been drawn as shown and the angles drawn in their proper positions, the student is ready for the development of the different surfaces, and the stretchouts may, accordingly, be laid off from spaces taken from the respective outlines. Edge lines are then drawn in the pattern and developers are carried from points on the sides of the angles determined by projectors from the profiles, in the manner shown. The work is precisely the same as has already been fully explained in connection with preceding problems and need not be further dwelt upon. The patterns for the respective segments are shown at (*a*), (*b*), and (*c*), and the student will understand, from an examination of the plan in Fig. 46, that eight pieces of each development will be required for the construction of the finished urn.

Digitized by Google

# EXAMINATION PLATE III.

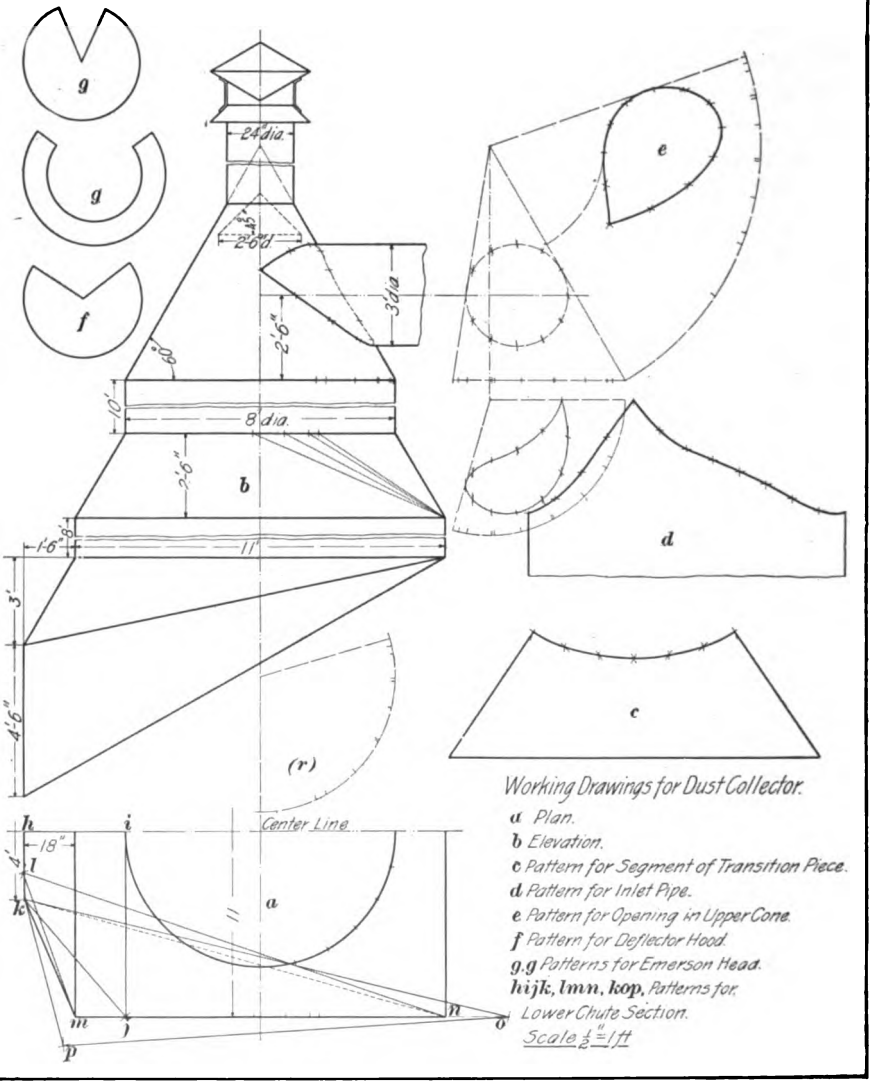


Working Drawings for Dust Collector.

**a** Plan.
**b** Elevation.
**c** Pattern for Segment of Transition Piece.
**d** Pattern for Inlet Pipe.
**e** Pattern for Opening in Upper Cone.
**f** Pattern for Deflector Hood.
**g.g** Patterns for Emerson Head.
**hijk, lmn, kop,** Patterns for Lower Chute Section.
Scale $\frac{1}{2}$" = 1ft

Digitized by Google

## DRAWING PLATE, TITLE: EXAMINATION PLATE III.

**23.** This plate is to contain the projections and developments necessary for the construction of a collector for shavings or dust, such as would be required at the outlet of a system of blowpiping in a mill or large factory. The different styles of collectors in use are made in a large number of forms, in order to meet all requirements of the different materials that are to be carried away. These contrivances are sometimes so small that they can be built of a comparatively light gauge of galvanized sheet iron; in other instances, as in the case of the "dust catchers" used for smelters and other reduction furnaces, they are often 15 to 20 feet in diameter and are built of $\frac{3}{8}$-inch or $\frac{1}{2}$-inch boiler plate.

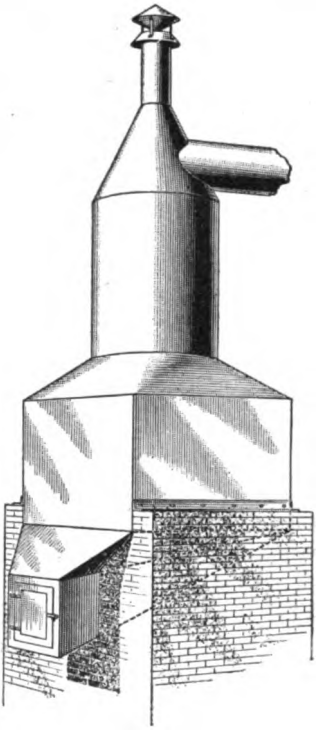

FIG. 48.

In general appearance, as shown in Fig. 48, they consist of an upright prism-like body—either cylindrical or rectangular in form—capped, or roofed, with a conic hood, into the curved sides of which the products from the blast system are discharged, usually by means of an intersecting cylindrical pipe. This conic roof terminates at the top in a vent pipe, which is carried to an elevation sufficiently high to prevent the escape of the dust or shavings conveyed, but which tends to relieve the pressure in the body of the receptacle, caused by the blower. An inner cone—sometimes a series of inner cones—is inserted below the opening of the vent pipe, for the purpose of offering

Digitized by Google

further impediments to the escape of the contents. In order to facilitate the cleaning of the collector, a slanting bottom is provided that has its opening usually closed by a cast-iron door whose frame is set in the brickwork of the foundation.

A very good idea of the proportions generally adopted may be gathered from the drawing in Fig. 48, although, as previously stated, these proportions may be varied to suit the requirements of special conditions. The drawings for this plate are to be constructed to a scale of ½ inch to the foot, and in accordance with the dimensions here given. As may be seen from Fig. 48, the lower portion of the body of the collector is rectangular in form, and is to be represented in the plan by a square that measures 11 feet on a side. The height of this section is 8 feet, and, as may be seen from the reduced copy of the plate, may be represented in the drawing by means of dimension figures placed on a comparatively small distance in the elevation. Since the true height is not shown in the projections, the wavy or broken lines should be drawn, as already explained in *Practical Projection*. The door through which the contents of the collector are to be removed is 4 feet in width and 4 feet 6 inches in height, and is placed 18 inches to the left of the square in the plan; in the elevation, the top of the door is represented as being 3 feet below the bottom edge of the square section. By the aid of these dimensions, the student will be able to construct the drawings for the irregularly shaped solid that forms the lower portion, or base, of the collector. Since the space on the plate is somewhat limited, only one-half of the plan need be drawn. The lower half is the one most conveniently represented, and the plan should be finished at the upper side by a broken-and-dotted line, plainly marked "center line."

**24.** A cylinder 8 feet in diameter and 10 feet in height forms the central portion of the body. The lower edge of this cylinder is placed 2 feet 6 inches above the rectangular portion, and, as shown in the plan, the centers of both

Digitized by Google

solids coincide. A tapering transition piece, of the height previously mentioned, is required between the rectangular solid and the cylinder, and is to be represented in the elevation as indicated in the reduced copy of the plate. A cone, whose sides flare at an angle of 60° with the horizontal, is placed on top of the cylindrical section, and the cone is joined at the top by a vent pipe 24 inches in diameter. Since the axes of the vent pipe and of the cone coincide, the line of intersection between the two solids will, of course, be represented by a horizontal line on the elevation. The vent pipe is, at the upper end, capped by an Emerson ventilator of the proportions already given in a preceding problem, while below the vent pipe, in the interior of the collector, a deflector is formed by a cone 2 feet 6 inches in diameter at the base, with sides tapering at an angle of 45°, so placed as to admit of the free passage of two-thirds of the amount of air carried by the vent pipe.

The inlet to the collector is through a horizontal pipe 3 feet in diameter, whose axis intersects the cone at a point 2 feet 6 inches vertically above the base. This inlet pipe is so placed with relation to the cone that, when shown in a side elevation, its outline will lie wholly within that of the cone and at one point will be tangent to a lateral outline of the cone. The details of this position are sufficiently shown in the reduced copy of the plate to enable the student to construct the required drawings.

**25.** The elevation and the half plan are first to be drawn, and in the construction of the elevation, it will be noted that the dimensions of the height of the central cylindrical section, as well as that of the vent pipe, may be represented by the same means employed in the case of the lower rectangular section—that is, by broken or wavy lines through the elevation, assisted by dimension figures. The line of intersection between the cone and the inlet pipe should be carefully worked out. To assist in this operation, a partial side elevation will be required, and for the purpose of avoiding complications in the plan, a partial plan may be

Digitized by Google

constructed in the space over the right-hand portion of the regular plan, as shown in the reduced plate.

After the projection drawings have been completed on the plate, the developments mentioned in the following list are to be drawn by the student. A good idea of the general arrangement of the patterns may be obtained from an inspection of the reduced plate, but the student should endeavor to construct his work with as little reference to the printed copy as possible. Do not erase your construction lines. In the arrangement of the developments on this plate, the student may place his views and constructions wherever they are most conveniently drawn. This method of arrangement is generally followed by pattern draftsmen, since it occasionally avoids extra work on their part; accordingly, whenever a certain line of either the plan or the elevation may be utilized as a construction line in the pattern, it may be taken advantage of to save work.

**26.** As in the case of the two preceding examination plates, a description of the various constructions is also to be added—this time in the lower right-hand corner. The different portions of the drawing are to be referred to in the following manner:

| | |
|---|---|
| (*a*) | Plan. |
| (*b*) | Elevation. |
| (*c*) | Pattern for segment of transition piece. |
| (*d*) | Pattern for inlet pipe. |
| (*e*) | Pattern for opening in upper cone. |
| (*f*) | Pattern for deflector hood. |
| (*g*), (*g*) | Patterns for Emerson head. |
| (*h i j k*), (*l m n*), (*k o p*) | Patterns for lower chute section. |

Scale.— ½ inch to the foot.

The method employed for ascertaining the true lengths of the elements of the scalene cone in the transition piece is somewhat different from that heretofore described, but the

Digitized by Google

student should be able to understand the process by the aid of the reduced drawing on the printed plate. In working out the line of intersection in the elevation between the cone and the inlet pipe, a partial view of the plan of the cone will be required, as already mentioned; this view is shown at (*r*) and is merely copied from that projected from the side elevation, but the student should be careful to transfer the distances in their correct relative positions. If he is careful to observe the rules and statements laid down in the elementary instruction of this Course, he will have no difficulty in making the drawings as required.

No specifications for the thickness of material used in the construction of this dust collector are given. It would naturally follow that in a form of this size, material of nothing less than $\frac{1}{4}$ inch in thickness would be used; but since the method of providing such allowances as would be required has been fully shown in some of the preceding problems, this consideration may, in the present case, be disregarded. The student will understand, however, that in the actual construction of full-sized working drawings, due allowance for this purpose should be provided.



Digitized by Google

Digitized by Google

# ARCHITECTURAL PROPORTION.

## INTRODUCTION.

**1. Reasons for Acquiring a Knowledge of the Principles of Architecture.**—The artisan employed in the construction of architectural work, whether of brick, stone, wood, or sheet metal, should possess a certain amount of general information in regard to the proportions properly maintained between the several parts of the structure. He should inform himself of the principles by means of which pleasing effects caused by the assemblage of unequal parts in the dependent portions of a design are united into a complete and characteristic whole. In order to be able to accomplish this result successfully, the student must, in addition to the mere knowledge required to reproduce such forms on the drawing board, be possessed of general information as to the proper distribution and symmetry necessarily maintained in the correlated parts of a design. It is not to be expected that the draftsman employed in erecting new buildings or in making radical changes in the exterior appearance of older structures will be held accountable for strict conformity to the relations of the various parts of the building as they have been interpreted by the great Masters in the art of Architecture. Nevertheless, it cannot be denied that a thorough knowledge of the elements of architectural design is of the most possible benefit to the worker. He is thus enabled to become a far more efficient assistant



For notice of the copyright, see page immediately following the title page.

Digitized by Google

in the successful working out of an architect's plans than his fellow-worker ignorant of classic requirements who follows out in a purely mechanical way the drawings furnished for any particular case.

**2. Duties of the Architect.**—The services of a professional architect are usually engaged when work of any magnitude is undertaken. With him rests not only the entire responsibility for the execution of the design, for in supervising the construction his duties require him to see that the work is carried out in accordance with its requirements, but he is also expected to be thoroughly informed as to questions involving the strength of materials, together with such other matters as will enable him to cope with problems of what is technically termed Architectural Engineering. In order to guard against the erection of insecure structures by incompetent persons, many of our large cities have ordinances requiring individuals that would practice the profession of architecture to undergo an examination in regard to their proficiency. The certificate of the examining board must first be obtained before the architect is eligible to practice. Notwithstanding these restrictions in the larger cities, owners of property elsewhere frequently undertake the erection of comparatively large structures without employing the services of either a consulting or a supervising architect. Especially is this the case in the smaller cities and country towns. The owner consults contractors in the different lines of building materials, perhaps without having at first any well-defined ideas of the final appearance of the building, and thus depends largely on the judgment and creative powers of the different craftsmen with whom he deals. Or, possibly, the owner has seen, in different buildings to which his attention has been directed, elements of beauty that have appealed to his fancy and that he has decided must be incorporated in the proposed new building. In the vast majority of such cases one needs not to be told, as he beholds the finished structure, that no architect has been employed. The building itself gives ample evidence

Digitized by Google

that such has been the case, and the owner—well, he is satisfied, for he has succeeded in getting a lintel cornice like Smith's, columns like Brown's, window-caps like Jones', and a main cornice like that on a particular building in Third Street. The Third-Street building in question was a one-story affair and the one erected by this owner was four stories in height, but this circumstance was not allowed to stand in the way of copying the cornice design. The owner

FIG. 1.

wanted that particular cornice for his building—and got it; the result, as seen in Fig. 1, being not unlike that produced by a corpulent middle-aged gentleman forced to wear a hat several sizes too small for him, and originally intended for a small boy—not to speak of other incongruities in his personal appearance due to an assemblage of garments each familiar at remote and widely separated periods of the world's history. When the owner is willing to entrust his interests to an intelligent and trustworthy architect, however, he may

Digitized by Google

be reasonably certain that such monstrosities as we have mentioned will be avoided. In the majority of cases, the comparatively small fee charged by the professional architect will prove a wise investment, and will serve to silence much unfavorable comment that would otherwise be heard in circles where the general appearance of the building is under discussion.

**3. The Draftsman and Designer as a Contractor's Assistant.**—Since it is true that in the majority of buildings constructed throughout our country, no architect is employed, it becomes apparent that an immense advantage is possessed by the contractor that is able to count among his employes one capable of producing an artistic design. While most owners that erect buildings without consulting an architect have distinct and well-grounded ideas of the desired plan and general arrangement of the rooms in a proposed structure, they are usually open to conviction when they consider its exterior appearance. In such cases, the successful competitor for the work is often one that has submitted a pleasing design for the owner's consideration. In order to be able to do such work intelligently, the draftsman should be informed, not only as to the ways and means of producing a finished drawing, but he should be in possession of a knowledge of the fundamental principles that govern the different architectural constructions, the usual proportions maintained between the different parts of the structure, and general information and an acquaintance with the classic orders of architecture, together with their distinguishing features. Equipped with this knowledge the artisan becomes not only capable of intelligently directing the choice and selection of the class of owners previously referred to, but a far more efficient worker and a more intelligent assistant to the architect when engaged on work under his immediate supervision.

**4. The Cause of Some Offending Structures.**—As a natural result of failure to consult a competent architect or to entrust the design of the structure to a person well skilled

Digitized by Google

in the knowledge we have already stated as fundamental, creations that, considered from an architectural standpoint, may be truly said to be "fearfully and wonderfully made" are to be seen in nearly every locality. Such buildings serve as perpetual and hideous examples of what the untrained hand of the mechanic is capable of, although, as we have already indicated, the blame cannot always be laid at the door of the worker. A building thus constructed offends the eye of the cultivated architectural student and calls forth much adverse criticism from others who, while not themselves able to locate the cause of the inharmonious effect, yet recognize in the ungainly appearing structure certain discordant elements whose flagrant inconsistency with their surroundings they cannot avoid noticing. Indeed, in the majority of such cases, it is not difficult to find among the local artisans some one that, in his ignorance of the eternal fitness of things, is pleased to point with pride at different portions of the outlandish travesty and say, "I made it." Unfortunately, the appearance of such structures cannot be altered unless at the expenditure of much money, and so they are allowed to stand as hideous disfigurations of the landscape until an opportune fire obliterates them.

No hard and fast rules can be laid down to be adhered to strictly in any and all cases, but if the worker is duly informed as to the correct interpretation of the different architectural orders, he will be less liable to fall into some of the egregious blunders of which his observation will have little difficulty in finding examples. The practicing architect is allowed a wide range of latitude for the selection of his subjects, and in the choice of what is best for any particular purpose he is limited only by the dictates of sound common sense and a wise desire to effect a unity of parts that will produce harmony in the entire design.

**5. Scope of Subject.**—While no attempt is here made to produce a history of architecture or to compile a manual of architectural design, it is proposed to indicate briefly, by means of a few representative examples selected from what

Digitized by Google

may be termed classical architecture, such standard elements of proportion and details of construction as are recognized by writers of reputed authority. This object will be attained, perhaps, in no better way than by a simple analysis and examination of what are known as the five orders of architecture. We propose to show, very briefly, however, how the exigencies of the situation required some distinguishing characteristic on which to build, and to point out in what manner the ancients grasped the existing conditions and proceeded to elaborate and embellish from time to time the necessary parts of the structure until they produced the several distinctive columnar arrangements now referred to as orders. When we speak of an order of architecture, it is generally understood that the expression refers to the systematic and symmetrical arrangement of the various parts of a column, and of the cornice, or entablature, that is supported by the column. The reason for this is that the several styles of ancient architecture found expression in characteristic columns, examples of which are still extant. The beauty of many of these ancient structures has been greatly impaired by the ravages of time and by the wanton hand of man, but enough remains to enable us to form an adequate idea of the imposing grandeur they originally possessed.

In addition to a study of the subject just mentioned, the student's attention will be briefly directed to certain other architectural styles that are best exemplified by the formations of their arches. While it is true that such original constructions were produced only in stone, this subject will prove of equal interest and value to architectural workers in all lines of material. The requirements of today are not the same as in the time of our ancestors. Durability is often sacrificed to admit of the employment of cheaper materials, as in the case of the World's Fair at Chicago in 1893; in this instance the solid effects of stone construction were produced in a striking degree with staff work. When it is desired to have greater permanence than this and a preponderance of weight is to be avoided, as in a lantern for a large dome or the upper works of a church tower,

Digitized by Google

modern machinery has rendered it possible for the sheet-metal worker to supply material that, without the slightest sacrifice of appearances, will be very durable.

**6. Historical.**—In its rudimentary and prehistoric state, the art of building received but little attention at the hands of the barbarians. There can be no doubt that the art found its origin in the efforts of man to provide himself with a dwelling. Handicapped as he was at the commencement of his era by a lack of knowledge and by the want of suitable appliances wherewith to reduce the crude forms of nature into the required shapes, it is not surprising that he sought a habitation in caves and natural fissures of the earth. Man's inventive genius, however, early asserted itself, and we may not unreasonably assume that the evolution of the dwelling from the cave to the hut marked a decided advance in the progress of civilization.

**7.** The first attempts at stone construction appear to have resulted in what are known as cromlechs, or table stones, Fig. 2, specimens of which are to be found in India and other Asiatic countries. These relics of primeval man are, however, of little value to the architectural student other than that they serve to show how, in the development of civilization, man applied himself to the decoration and embellishment of existing forms. His first efforts were probably expended in the direction of a symmetrical arrangement and grouping of columns, or supports. Next, following the invention of

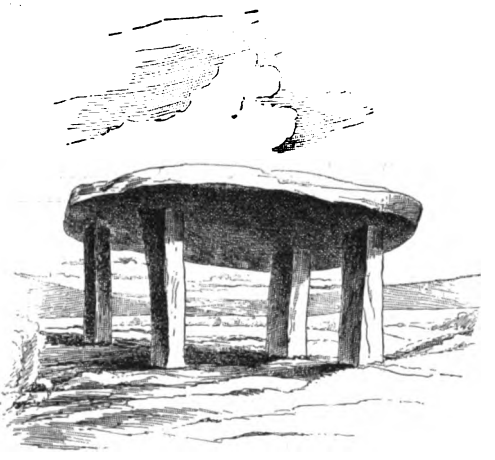

FIG. 2.

Digitized by Google

suitable tools for working and dressing the different stones of the structure, we find that the rough edges and faces of the cromlech give place to symmetrical outlines. Graceful moldings are added at the tops and bottoms of the shafts, careful examinations of which reveal the fact that the minutest care and a precise mathematical knowledge were exercised at the time they were planned. Indeed, the subject of moldings by itself forms a most interesting and

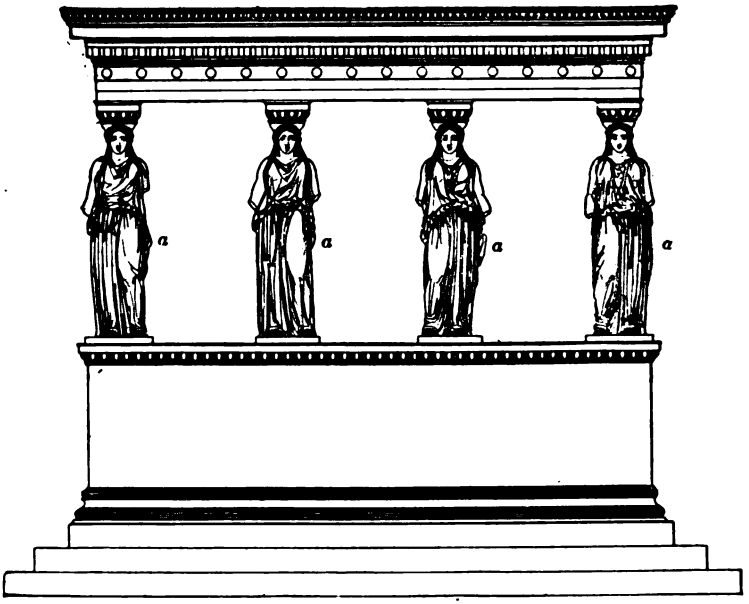


FIG. 8.

instructive study. Their origin, no doubt, might be traced to the crude chamfering of a square corner, perhaps for the purpose of removing traces of accidental chips, or spalls. The pleasing effect thus obtained was carried farther until the useful and beautiful curves invented by the ancient geometers were adopted as profiles. The architecture of different periods in the world's history is characterized by peculiar combinations of these curves. So well are they understood by close students of the science, and so strictly

Digitized by Google

were the laws of proportion between the different members followed, that it is possible to determine from an examination of almost any given part, not only in what period the building was erected, but to give a close approximation of its entire size.

**8.** With the progress of the art, we find that certain plane surfaces, and in some instances moldings, are enriched by regular carvings in relief, sometimes suggestive of plant life and at other times of geometrical constructions. These, too, are equally interesting and furnish the modern architect with a wide field for selection. As the genius of man

FIG. 4.

was developed, it found expression in copying other forms of nature, and the human figure was adapted to certain features of architecture, as in the caryatides *a*, Fig. 3. There is little doubt that the efforts of the old builders in this direction were considerably hampered by restrictions that were imposed on them by the conventionalities of their

Digitized by Google

religion, but examples of medieval architecture are to be found in which the propensity to copy nature's forms has been allowed full sway. Figures of man, beast, and bird, grotesque and natural, adorn structures in every conceivable part and contribute in no small degree to the general beauty.

**9.** The evolution of the entablature from the rough flat stone seen in the cromlech to the classical formation familiar in the Corinthian order of architecture, with its beautifully wrought modillions, its dentils, and its enriched courses of moldings, affords an interesting course of study. A handsome example of the Corinthian order may be seen in the illustration of the portico of the Pantheon at Rome, Fig. 4. That this growth was gradual is evidenced by the fact that in the earlier orders attempts at producing what might be termed a bracketed effect are to be seen in the triglyph *a*, Fig. 5, of the Doric order of architecture.

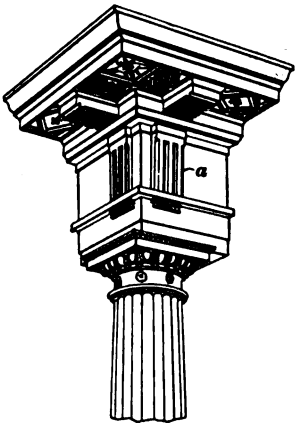

FIG. 5.

**10.** The arch as a conspicuous feature of architecture appears to have been neglected by the earliest builders, perhaps because its principles of construction were not then understood. Then, too, we have evidences that wood was first employed as a building material, undoubtedly owing to the circumstance that it is more easily worked. To whom the credit of this important invention properly belongs is not known, but the early Romans are certainly to be credited with having made very important practical uses of its properties. Indeed, many of their important memorial productions consisted primarily of an arch of stupendous proportions, and the other parts of the structure were added merely as decorative accompaniments. A famous example

Digitized by Google

of this type of construction is to be seen in the Arch of Constantine, Fig. 6, which has undoubtedly been the cause of inspiration for many architects of our own times that have been called on to furnish designs for triumphal arches in different localities. Arches of various forms are to be

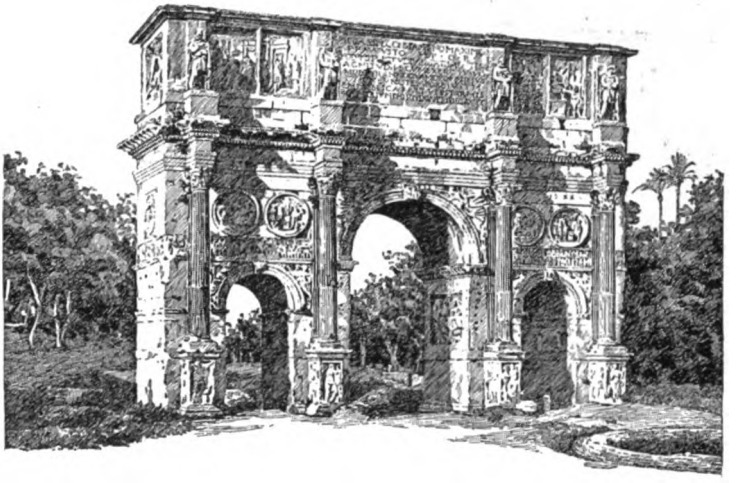

FIG. 6.

encountered as distinguishing features of several styles of architecture. Without attempting to go very deeply into this interesting subject, which in itself should form the basis for much study on the part of the young architect, we give a few examples that may serve to indicate the lines on which to make a more thorough research.

**11.** In its first inception, the arch appears to have been employed in the construction of vaulted domes, of which numerous examples are to be found. Later, they were introduced into the retaining walls of the structure, and we find them, finally, used in lieu of girders over openings required for entrance and for the admission of light. The pointed, or Gothic, arch, Fig. 7, lends itself in a variety of characteristic forms to several distinct styles of architecture, notably those of the Renaissance period. Many of

Digitized by Google

these styles are distinguished by elaborate ornamentation and rich carving, as in the case of the palace of the Alhambra, a building that is often cited as an example of Saracenic, or Arabesque, architecture. Again, we find further distinguishing features in the manner in which the openings covered by the arch were subdivided by elaborate tracery, often bewildering in its intricate geometrical convolutions. This tracery is valuable to the student of architecture as furnishing a key by means of which the date of any particular construction may be determined. A few important examples will be considered later.

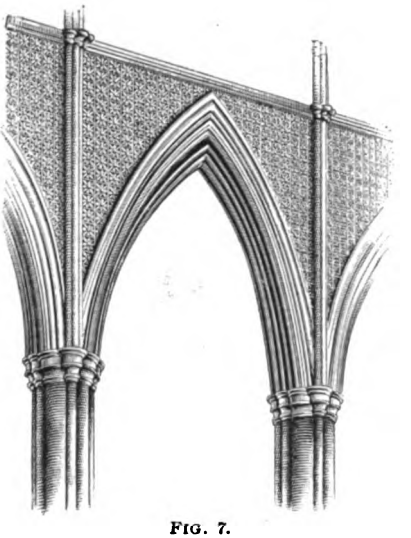

FIG. 7.

**12.** We have thus somewhat briefly indicated the lines on which the growth of modern architecture had its beginnings, and will now proceed to point out more carefully some characteristic features of particular cases. This we can do in no better way than by a study of the five principal orders of architecture. The remark that "There is nothing new under the sun," is true of no subject to such an extent as that of architecture. The "Ancient and Original Orders of Architecture" are today as much the objects of admiration and of emulation as when Sir Christopher Wren planned St. Paul's Cathedral and the majestic spire of St. Bride's Church in Fleet Street, London, or later, when Vignola and Viollet-Le-Duc, the great French architects and writers, wrote their famous compositions that are now recognized as authorities of the standard of excellence.

Digitized by Google

**13. Definitions of Terms.**—Before proceeding with a description of the five orders, however, the student should have a distinct understanding of what is meant by the term *order* as referred to the subject of architecture. As we have already indicated in the brief historical sketch of its growth, the art of architecture found expression in characteristic features of the column and in the parts of a building closely related to the column. It is possible, therefore, to represent nearly every important feature of any architectural order in such a view as is shown in Fig. 8, which is a perspective illustration of the typical Corinthian order. An orthographic, or true, projection of this perspective view is given in Fig. 9 in order that its component parts may be seen to better advantage. As shown in Fig. 9, an order is capable of division into three principal parts indicated, respectively, by the letters *A*, *B*, and *C*. These principal parts, or divisions, are common to all the orders, although often varied in proportion and in detail.

**14.** The **stylobate,** as may be seen from Fig. 9, is that portion included by the dimension *A* which forms the substructure, or foundation, that supports the column. The stylobate is usually wider than the column, and its base covers a larger area in order that the load transmitted by the column may be distributed properly in accordance with the laws governing the laying of foundations.

**15.** The **column** is that portion of the order included by the dimension *B*, and is made up of three principal subdivisions, viz., the *base a*, the *shaft b*, and the *capital c*. The details of these parts of the columns are widely different in the several orders, as will be more fully explained later on.

**16.** The **entablature,** represented by the dimension *C*, Fig. 9, is the superstructure proper, and is, in turn, made up of three principal subdivisions called, respectively, the *architrave d*, the *frieze e*, and the *cornice f*, each of which serves a particular purpose in the structural and ornamental composition of the entablature.

Digitized by Google

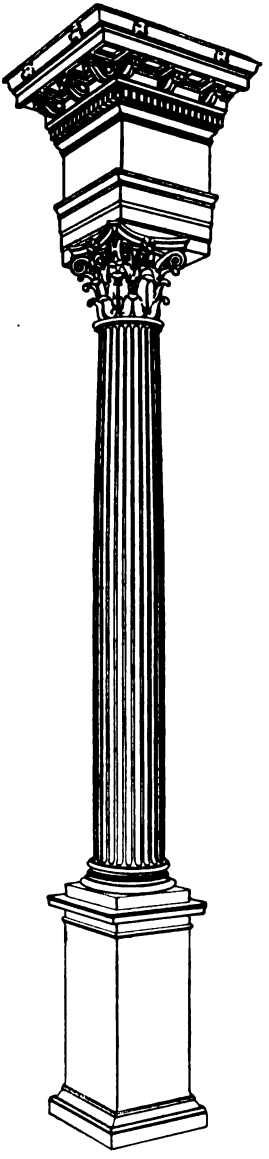

FIG. 8.

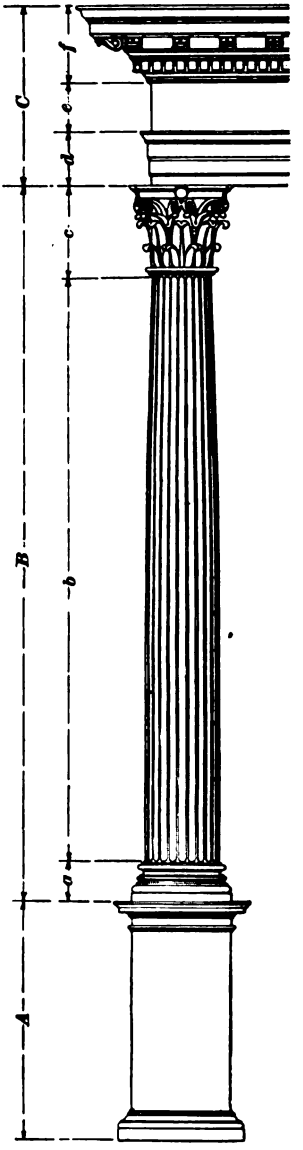


FIG. 9.

Digitized by Google

**17. Scales of Modules and Parts.**—Careful analysis of the ancient orders has revealed the fact that arbitrary measures of proportion were used to establish ratios between their several divisions and members; that is, the diameters of the columns bear a certain relation to the heights of each of the three principal divisions, and, in turn, to the different members that compose those divisions. The scales of proportion used in the different orders are found to be dissimilar, although the ancient builders adhered very closely to the proportion of parts that were established for any particular order. Thus, the Doric temples of the ancient Greeks, although frequently differing in size, are invariably adapted to the established proportions. Indeed, it has been said that if the diameter of a single column were given to two individuals acquainted with the details of the order, "they would produce designs exactly similar in size, arrangement, features, and general proportions, differing only, if at all, in the relative proportions of minor parts." This is true of the Doric order perhaps more than of certain other orders, for it is possible to find exceptions to the general rule previously given, and in examples of later architecture, we often find that new proportions have been introduced. Such changes, however, do not always redound to the credit of the architect, and before any wide departure from accepted proportions is made, it is well to consider the effect very carefully. It is a generally accepted fact that the proportions established by the ancients cannot be improved upon, and it is certain that ability of a high order is necessary to the individual that would attempt such changes.

For convenience in measuring the several parts of the different architectural orders, one-half of the diameter—that is, the radius—at the base, or widest part, of the column has been taken as the measuring unit, and is called the module, from the Latin *modus*, meaning a measure. In order to enable the smaller members of the design to be suitably measured, the module has been divided into 30 subdivisions, called parts. In the illustrations of the orders, the terms modules and parts are abbreviated to m and p.



Digitized by Google

**18. Use of Scale of Modules and Parts.**—When it is desired to construct a detail or a drawing for any particular order of architecture, it is first necessary to lay off a scale in accordance with the system just explained. Suppose, for example, that a drawing is to be made in which the column is to be shown 24 inches in diameter. The length of the module in this case is 12 inches, or the same as the radius of the column. The length of a part, therefore, is $\frac{1}{30}$ of 12 inches, and is best determined by laying off a length

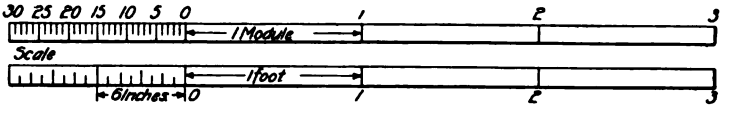


FIG. 10.

of 12 inches in accordance with the reduced scale to which the drawing is to be made, and subdividing such length, as in Fig. 10. The reduced scale is shown below the scale of modules, and from the drawing there shown it is apparent in this instance that a dimension of 2 modules and 15 parts is equivalent to 2 feet 6 inches; a module, however, is not always a foot in length, as already explained. Any other dimensions, expressed in modules and parts, that may be required can thus be directly referred to the corresponding scale of inches when desired.

**19. Explanation of Technical Terms.**—It is important that the student, in order to be able to study the different orders intelligently, should be familiar with the various terms used to describe particular parts. With the object of presenting this information, his attention is directed to Fig. 11, which is an enlarged drawing of the Corinthian order shown in Fig. 9; in Fig. 11 the parts are lettered for convenience of reference. The principal divisions into stylobate, column, and entablature are indicated, as before, by the letters *A*, *B*, and *C*, and the several subdivisions of the column and of the entablature previously mentioned are represented, respectively, by *a*, *b*, and *c* and *d*, *e*, and *f*.

Digitized by Google

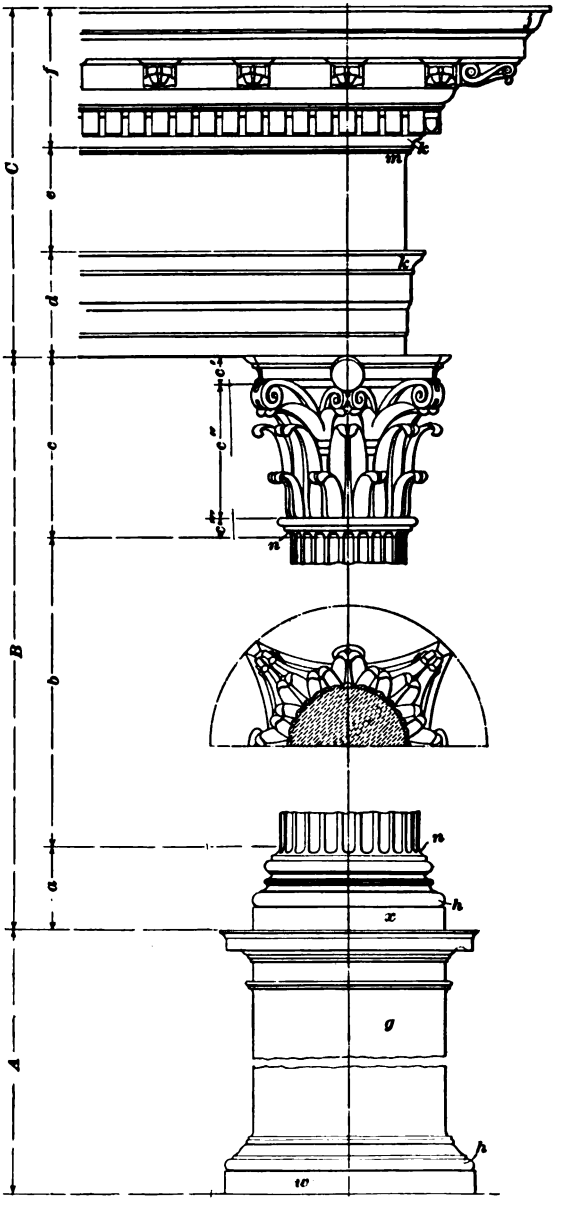


FIG. 11.

Digitized by Google

**20.** An examination of the stylobate reveals the fact that it is made up of a central square block *g*, sometimes called the *dado*, square in plan and ornamented at its upper and lower extremities by a series of moldings. When speaking of moldings, it is usual to use the term member when referring to the separate surfaces of which any molding may be composed. Any surface may be referred to thus

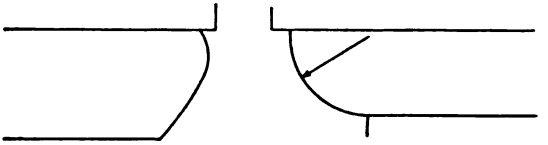

FIG. 12.

whether it is curved or flat. A wide flat member is called a **fascia,** while a flat narrow member is designated by the term **fillet,** although these terms are more commonly employed in the case of members whose surfaces are in a vertical plane. Members whose surfaces are curved are also designated by particular terms; thus, the rounded moldings at *h* are called **torus moldings,** and are represented in a profile view by a semicircle. Moldings whose

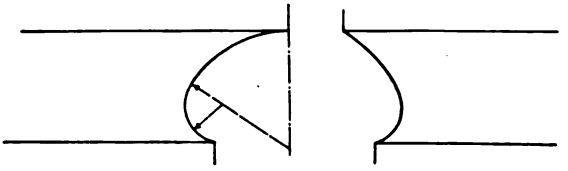

FIG. 13.

profiles are represented by a quarter circle are termed **quarter-rounds,** and are further distinguished by the terms **cove** or **cavetto** if the curvature is concave, and by the term **ovolo** if the curvature is convex. When a quarter-round molding is used to finish, or terminate, a wide plain surface, as in the case of the frieze at *m*, or to "ease" the profile of a shaft, as at *n*, it is frequently termed an **escape.** Certain moldings of double curvature, as those shown at *j*

Digitized by Google

and *k*, *k*, are often referred to as cymas, or **ogee moldings**; when the form is as shown at *j*, the molding is particularly known as a **cyma recta**, and when the curve is reversed, as shown at *k*, the molding is called a **cyma reversa**.

Two other moldings not shown in Fig. 11 are the *echinus*, Fig. 12, and the *scotia*, Fig. 13. The formation of these moldings will be considered more particularly in a later article.

**21.** Referring again to the stylobate in Fig. 11, it will be noticed that the lower portion of its base is a broad flat member *w*, or fascia, square in plan. Such a member of a stylobate or a column is often referred to as a **plinth**, from the fact that it was formerly made of a single stone or tile. The base of the column in Fig. 11 is supported by a plinth *x* resting on the stylobate. Among the moldings prominent in the profile of the base may be seen the torus, the cove, and a number of small fillets. The shafts of the columns in the different orders will be more particularly considered under their separate headings, and may be passed over for the present without special mention.

**22.** The **capital** *c*, Fig. 11, usually consists of three principal parts, the abacus *c'*, the bell, or vase *c''*, and the necking *c'''*. The **abacus** is the upper extremity of the column, and in the Corinthian order is composed of a series of moldings, as shown. The arrangement of these moldings, when represented in plan, is varied in the several orders, as will appear during the specific examinations that follow. The series of moldings at *c'''*, Fig. 11, is variously called the **astragal**, **necking**, or **neck mold** of the capital, and that portion between the neck mold and the abacus is called the **bell**, or **vase**. Here it is seen to be richly ornamented by the addition of different sized acanthus leaves, volutes of peculiar construction, and certain other appendages that will be explained later.

**23.** The principal subdivisions of the entablature, the architrave, the frieze, and the cornice, have already been

Digitized by Google

mentioned. The entire **architrave** is frequently referred to as the foot mold, and is seen to consist principally of wide fascia members separated from one another by fillets and relieved by the introduction of certain of the curved members previously mentioned. The wide plain surface of the **frieze** is often broken up into panels, and in many cases is enriched by very elaborate carving. No particular cases will be discussed at present.

**24.** The term **cornice,** a word derived from the Latin and Greek words meaning crown, was originally applied only to the upper portion of the entablature; that is, to the part designated in Fig. 11 by the dimension *f*. In its present acceptation, however, the term cornice is used indiscriminately to describe any of the horizontal projecting moldings that crown, or finish, any particular part of a

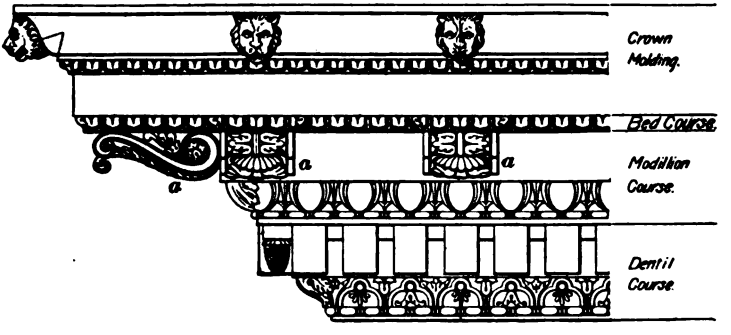


FIG. 14.

structure. We shall consider here only the classic interpretation of the term. In general, the moldings that compose the cornice are the same in outline as those already described. Inasmuch as the arrangement of the different moldings in the cornice is somewhat peculiar, and moreover, since particular terms are applied to the several parts not readily shown in a drawing so small as that in Fig. 11, an enlarged drawing of the cornice is presented in Fig. 14. Here it is seen that the cornice proper is made up of a

Digitized by Google

*dentil course*, a *modillion course*, a *bed course*, and a *corona*, or *crown molding*. Certain wide members in the lower portion of the cornice are rendered more ornamental by the addition of small blocks called dentils placed at regular intervals. These wide members, together with the curved member immediately below the dentils and the fillets above the frieze, are collectively called the **dentil course.** Above the dentil course a series of fillets and variously curved members appear, and above these a wide fascia on which at regular intervals the modillions are spaced. The modillions *a*, *a*, *a* in Fig. 14 are blocks, or brackets, frequently enriched on their faces and sides. The acanthus leaf and the volute are favorite ornaments and are applied in a variety of ways to their exposed surfaces. That portion of the cornice included between the dentil course and the upper edge of the modillion fascia is termed the **modillion course,** and is topped by a series of moldings consisting of fillets and a curved member, termed the **bed course.** The moldings of the bed course are not infrequently carried around the tops of the modillions, as shown in Fig. 14. The soffit, or under portion of the cornice between the modillions, is called the planceer, and usually is enriched by a panel construction having in its center an elaborate rosette. The **crown molding** consists of a wide fascia, a series of fillets, or fillets and cove molds, and an ogee whose width is usually equal to that of the fascia, the whole topped by a fillet of graceful proportion.

The cornice is to the entablature what the capital is to the column, the crowning member of the composition, completing it in a very pleasing and artistic manner.

The general features of an order having thus been explained to the student, we will now proceed to a more careful study of the five orders so frequently mentioned. These orders will be discussed only in an elementary manner, as suited to the requirements of the building-trades worker, for it is not assumed as essential that he should possess so intricate a knowledge as would be expected of the practicing architect.

Digitized by Google

## THE FIVE ORDERS OF ARCHITECTURE.

**25. Their Names and Distinguishing Features.**— The names of these five orders are, commencing with that of the earliest origin, the Tuscan, the Doric, the Ionic, the Corinthian, and the Composite. The illustrations of these

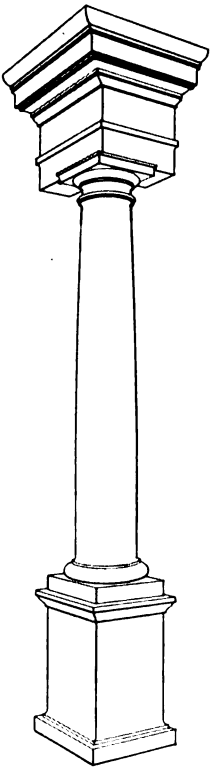

FIG. 15.

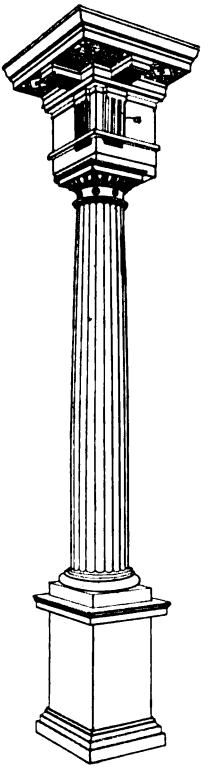

FIG. 16.

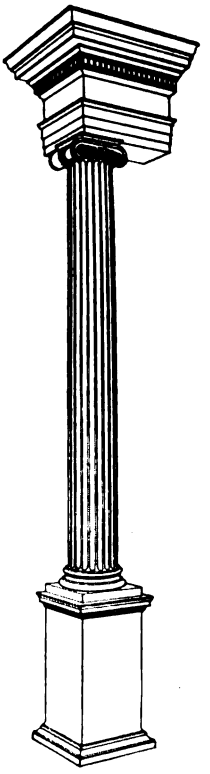

FIG. 17.

classic orders that appear on the following pages contain many dimensions expressed in modules and parts. These dimensions are not referred to in the text, but are placed on the drawings in order that the student may have a convenient means of reproduction when he is required to make enlarged working drawings of the orders. The particular

Digitized by Google

method employed in doing this work will be explained later.

The **Tuscan order,** Fig. 15, is of doubtful origin, and was probably never very extensively used. Massive in appearance and severe in its outlines, it contains the least ornamentation of any of the five orders.

The **Doric order,** Fig. 16, closely resembles the Tuscan in the severity maintained by the lines of the column. The appearance of the shaft, however, is rendered more pleasing by the introduction of flutes, and we find, in the entablature, that the surface of the frieze is broken at regular intervals by triglyphs; we also find that the cornice is given greater projection, and that its under surface, or planceer, is decorated to a certain extent.

In the **Ionic order,** Fig. 17, is to be found the first attempt at extensive decoration of the capital. The beautiful spiral known as the Ionic volute is here introduced with pleasing effect, and we find also that the capital contains other ornamentation that will be more specifically referred to when the details of the order are considered.

The **Corinthian order,** Fig. 18, is perhaps the best known of the five ancient orders, due possibly to the fact that its use has been much more extensive in examples of recent architecture. The Ionic spiral plays an important part in the decoration of this order, and is seen, together with the acanthus and the anthemion leaf, in the capital and in the modillion. The corona of the cornice also is frequently decorated by the addition of heads of animals placed over alternate modillions.

The **Composite order,** Fig. 19, was invented by the Romans in the endeavor to secure a still more elaborate effect than was possible with the Corinthian. It is practically a combination of the Ionic with the Corinthian. It will be noticed that the arrangement of the flutes in the shafts of the columns in the last three orders is very nearly alike and that, in place of finishing in sharp edges, as in the case of the Doric order, between each flute may be seen a portion of the rounded surface of the shaft.

Digitized by Google

**26. Different Interpretations of the Orders.** — As might very naturally be supposed, the two greatest nations of ancient times—the Greeks and the Romans—to whom we are indebted for the principal examples of classic architecture, modified these orders somewhat in order to conform them to their ideas of beauty. The principal proportions are, in the

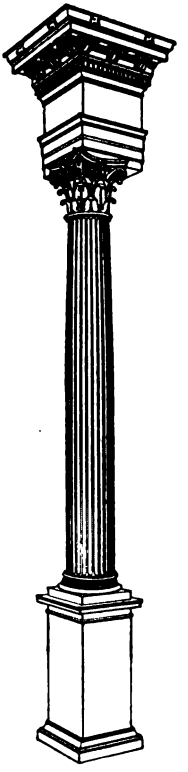

FIG. 18.

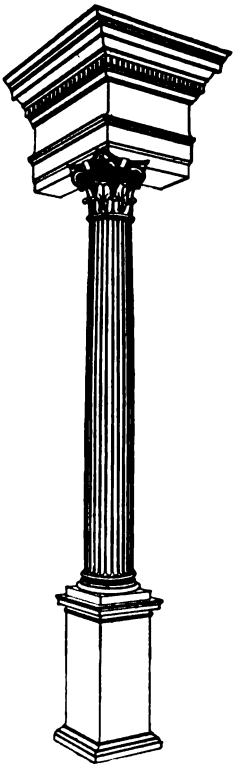

FIG. 19.

main, very closely observed by both nations, so that the independent characteristics are rendered quite prominent. The modern student of architecture, however, recognizes these modifications to such an extent that, with the exception of the Composite order, which is distinctly Roman, it is usual to refer to the several orders as the Grecian Doric or

Digitized by Google

the Roman Doric, the Grecian Ionic or the Roman Ionic, as the case may be. One of the principal points in which the Roman rendering of an order differs from that of the Greek rendering lies in the use of particular curves for certain moldings, although in general it may be stated that the Romans exhibited a tendency to employ a greater amount of enrichment in their work than did the Greeks. The Romans also, as already stated, made frequent use in their buildings of the arch, which appears to have been either neglected purposely or was not understood by their Greek predecessors in the art of building.

We will now proceed to study the details of the several orders, commencing with the Tuscan. This study will be aided by projection drawings in which the scale of modules and parts is used for all proportions. The student will be enabled, therefore, from the illustrations here shown, to construct detail drawings for any desired order.

---

## THE TUSCAN ORDER.

**27.** This order, effectually shown in Fig. 20, has been called the Doric in its earliest state. It takes its name from the Etruscan people, who are supposed to have been its originators, although no example of this order can be found in any structure of great antiquity. Unknown, or rather unused, by the Greeks, it appears to have been chosen by the Romans for their earliest buildings, and may be considered as an undeveloped form of the Roman Doric. The Tuscan column and entablature, however, bear a closer resemblance to the proportions of the Greek Doric than to the Roman Doric. The characteristics of the order are its crudeness and plainness, combined with its heavy moldings. It lacks, also, the refinement of outline so pronounced in the other architectural orders. Like all other Roman orders, it has a regularly proportioned and molded pedestal, or stylobate, which, though not a specific part of the order itself, is generally drawn with it when the order is shown alone.

Digitized by Google

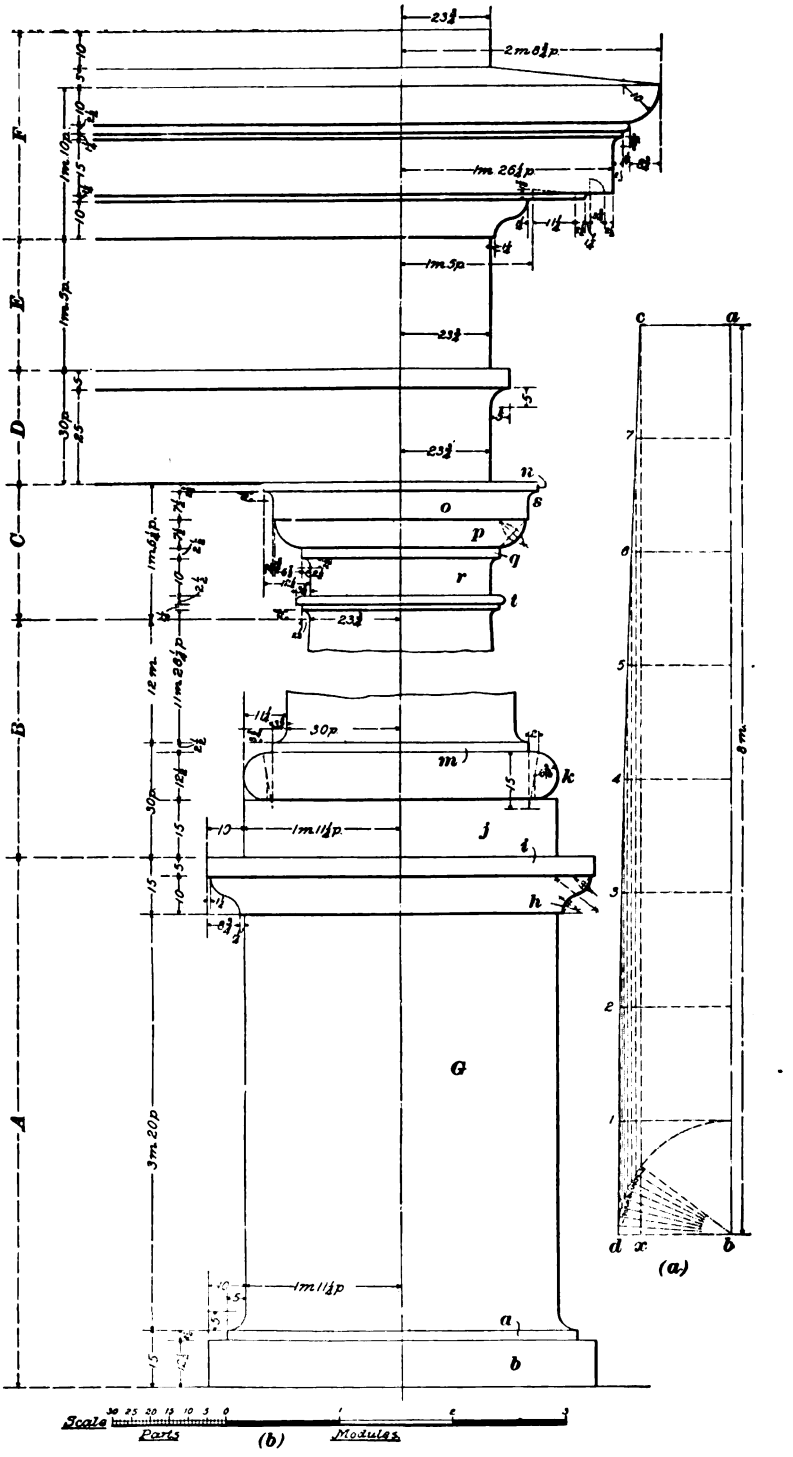


FIG. 20.

Digitized by Google

This pedestal is seen from Fig. 20 to consist of a square block *G* finished at the lower edge by the fillet *a* and resting on the plinth *b*; its upper edge is enriched by the addition of the cyma reversa *h* and a fillet *i*.

**28.** The shaft of the Tuscan column is never fluted. The base of the column consists of a torus *k* and a fillet *m* resting on a square plinth *j*. The capital consists of an abacus, ovolo, and necking. The abacus is square in plan and is composed of a fillet *n* resting on a plain fascia *o*, which has at *s* a curved escape to the fillet. The ovolo *p* is a plain molding often referred to as a quarter-round, as its section is exactly one-quarter of a circle. The ovolo is circular in plan and is finished below by the fillet *q*, which, in turn, is eased off by a quarter-round into the bell *r*. At its upper extremity, the column is seen to finish in a quarter-round, fillet, and torus, as shown at *t*, Fig. 20.

**29.** The entablature is subdivided into an architrave *D*, a frieze *E*, and a cornice *F*, each composed of typical moldings well shown in the illustration. The moldings of the Tuscan order are never enriched by dentils, carvings, or other attempts at ornamentation. They are large and heavy in proportion to the other parts of the construction and have never been popular with modern architects.

**30.** In order that a concave appearance in the shaft of a column may be avoided—which would be the case if its sides were parallel or were tapered uniformly toward the top—it was customary to represent the outlines of the shaft by a convex curve obtained in the manner shown in the drawing at (*a*). This convex curve is called the entasis of the column, and is obtained in a slightly different manner in each of the several orders. As shown at (*a*), the line *a b* is equal in length to that of the column, and is divided into eight equal spaces. At each end of the line *a b*, and also through each of the points used to divide its length, a perpendicular is erected, as shown at (*a*); *a c* is made equal in length to the upper radius, and *b d* equal to that of the lower

Digitized by Google

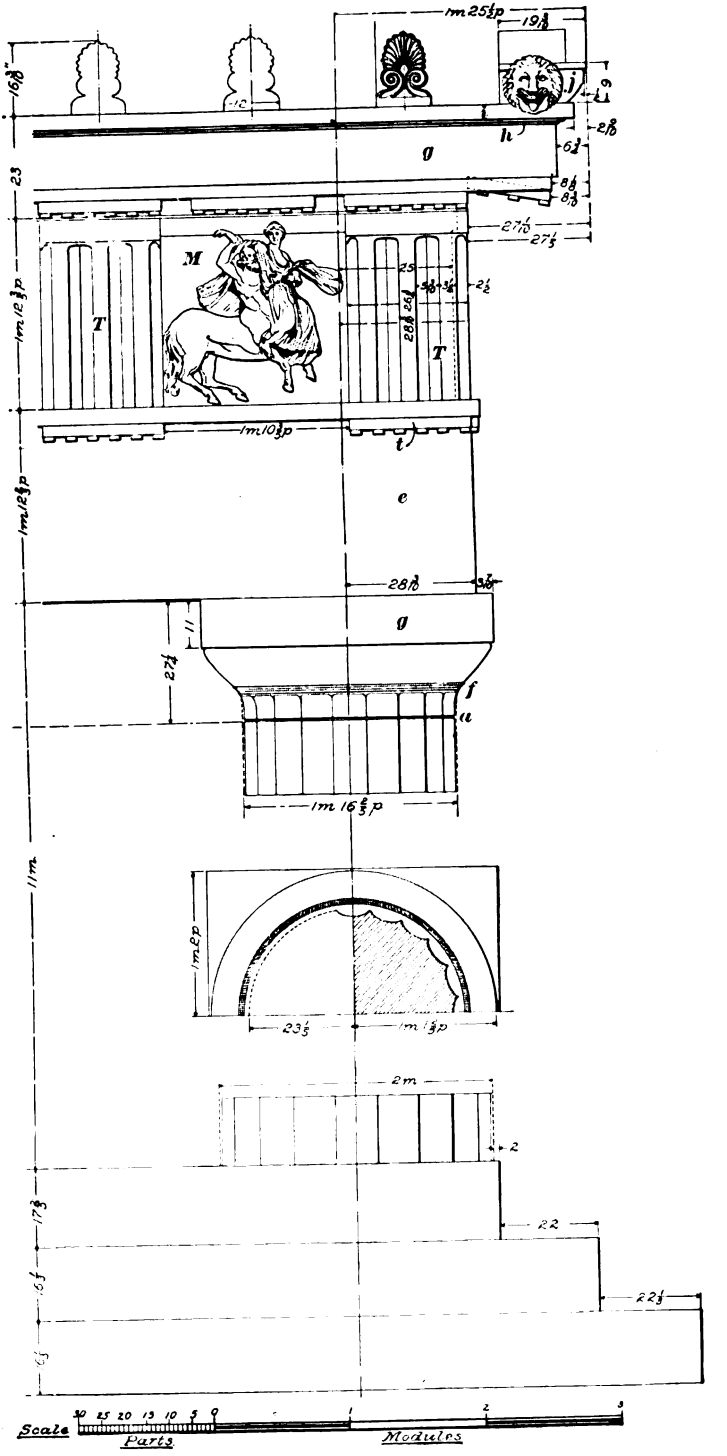


FIG. 21.

Digitized by Google

radius. The length *a c* is also set off on the line *b d* at the point *x*. A perpendicular to *b d* is then erected at the point *x*, and an arc is next described from the point *b* as a center, with a radius equal to the length of *b d*, cutting the perpendicular from *x* as shown. This arc is divided by spacing it into eight equal parts—the same number used for the division of the line *a b*. The points of intersection through which the entasis is drawn are then found by drawing parallels to *a b* from the several points of division on the arc and producing them until they intersect the perpendiculars erected at the points of division on the line *a b*. A scale of modules and parts is shown at (*b*), and by its aid the student should be able to reproduce a drawing of this order to any scale he may desire.

## THE DORIC ORDER.

### THE GRECIAN DORIC.

**31.** Of the three Greek orders previously referred to, the Doric is the most ancient. Its general character is expressive of grandeur, dignity, and simplicity. A good idea of the principal proportions of this order may be obtained from the drawing in Fig. 21, from which it may be seen that the Doric is even more simple in construction than the Tuscan order just described. The attention of the student is first directed to the stylobate, which is here shown to be composed of three wide flat members arranged in the form of steps. The Grecian idea of the stylobate differed from the Roman interpretation of the same in that the Greeks seem to have considered the stylobate as the substructure, or foundation, for the entire building, while the Romans treated the stylobate as a substructure for the column only. The Doric column is seen to be rather more slender in appearance than that of the Tuscan, and its capital is wider; that is, its members have greater projection

Digitized by Google

than the members of the Tuscan capital. The Grecian Doric column has no base, and the longitudinal flutes of the shaft finish abruptly against the top of the stylobate. These flutes, always sixteen or twenty in number in this order, are shallow channel-like grooves whose cross-section is represented by an elliptical curve. The sharp projecting edges between the flutes are called arrises, and form, in modern practice, one of the distinguishing characteristics of the order.

**32.** The method of drawing the profiles, or stays, by which the flutes of a Grecian Doric column may be cut, or formed, in the case of sheet-metal work, may be understood from an inspection of Fig. 22. This figure is an enlarged plan of one of the flutes of a Grecian Doric column, in which *a d b* represents the form of the channel at the bottom of the shaft, and *a' d' b'* the form at the top. The arcs of the upper and lower sections of the shaft are represented, respectively, by *r s* and *p q*, and the distances *a b* and *a' b'* are exactly one-twentieth of the corresponding circumferences. The center line *m n* cuts the chords *a b* and *a' b'* at their middle points *c* and *c'*. The depth *c d* of the channel at the base is obtained by dividing *a b* into seven equal parts and making *c d* equal to one of these parts. The depth *c' d'* at the top of the column is obtained by dividing *a' b'* into six equal parts and making *c' d'* equal to one of these parts. The depth of the channel at the top is therefore greater, in proportion to its

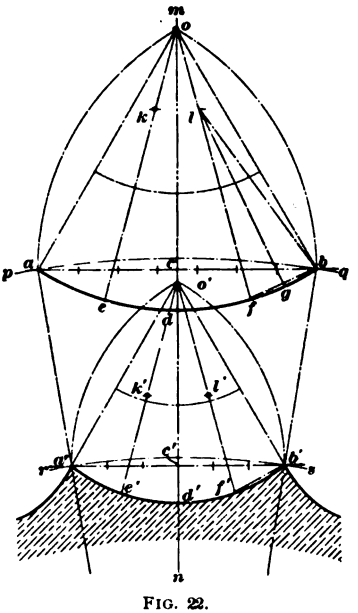

FIG. 22.

Digitized by Google

width, than at the bottom of the shaft. The centers of the three arcs that compose the curve *a d b* are found by constructing the equilateral triangle *a o b* on *a b* as a base and bisecting the angles *a o d* and *d o b* by the lines *o e* and *o f*; the point *o* will then be the center for the arc *e d f*. The chord *f b* is next drawn, and at its middle point *g* is erected a perpendicular *g l* cutting *o f* at *l*; the point *l* is the center for the arc *f b*. The center *k* for the arc *a e* is found in a similar manner. The centers *o'*, *l'*, *k'* for the curve *a' d' b'* are determined in precisely the same manner as described for the curve *a d b*. The general outline for the shaft of the Grecian Doric column may be described as that of a frustum of a cone the diameter of whose upper base is four-fifths that of the lower. The entasis, or longitudinal curvature, given to the outline of the shaft is occasionally omitted from this column, but when required may be drawn as indicated at (*a*), Fig. 20, the method there given being sufficiently accurate for all practical purposes.

**33.** The capital of the Grecian Doric column is separated from the shaft by a groove *a*, Fig. 21, at the place usually occupied by the neck molding in the other orders. The flutes of the shaft are seen to be carried past this groove and to die away in a curve of the bell, or vase, portion of the capital immediately below a series of annulets, or grooves *f*. Above the annulets is placed an echinus, the curve of which, as well as that of the bell portion of the capital, will be considered in a later article. The capital is finished at the top by the plain plinth-like abacus shown in Fig. 21 at *g*.

**34.** The entablature of the Doric order is the embodiment of dignity and simplicity. Its lowest division, the architrave *e*, is a wide plain fascia, strongly suggestive of a massive wooden beam whose upper edge is finished by a small, squarely projecting fillet. The middle division of the entablature constitutes a characteristic feature of the order, and is always ornamented with triglyphs *T* and metopes *M*. A portion of the triglyph, called the fillet,



Digitized by Google

*t*, Fig. 21, extends below the upper fillet of the architrave, and is finished by six little dentil like appendages supposed to represent the heads of treenails, or pins, used in the early wooden construction. The meaning of the word triglyph—that is, three-channeled—is apparent from the drawing in Fig. 21, which shows the three V-shaped vertical grooves, although the grooves are so disposed on the face of the triglyph that one of them is divided and appears as a half channel, or chamfer, on either side of the triglyph. The space between two triglyphs is called a metope, and is usually occupied by a carved slab. The triglyphs are always so placed that one appears over every column—not necessarily centrally over, however—and one or more over the space between each pair of columns, but they are always spaced at such distances as to allow the metope to be exactly square; in other words, the height of the triglyphs is equal to the distance between them. In their earliest inception, they are supposed to represent the ends of timbers used to support the roof of the structure, and the ends of such timbers were finished in the manner described, in order to add to the attractiveness of the design. A peculiarity of the Grecian Doric frieze is that the end triglyphs, instead of being, like the others, in the same central line, or axis, as the columns beneath, are placed quite up to the edge or outer angle of the frieze. This is accomplished by making the space between the outer columns less by one-half a triglyph than the intermediate ones, thereby imparting an additional appearance of strength and solidity to the angles of the building.

The upper division of the entablature, the cornice, is extremely simple though strongly characteristic and boldly marked. It has greater projection than the cornice of the Tuscan order, and the surface of the planceer is broken at regular intervals by raised panels—or rather, depressed, for they extend downwards from the soffit—that are placed directly over each triglyph and each metope. These panels are properly termed mutules, and correspond in width with the triglyphs; their under surface is inclined downwards

Digitized by Google

and outwardly and is ornamented with three rows containing six drops each, as shown in Fig. 21. These drops, or guttæ as they are properly termed, are somewhat conical in shape and are more clearly shown in the plan of the under side of the cornice in Fig. 23. A section through the corner triglyphs is also shown in Fig. 23, where the V-shaped channels may be distinctly seen. The outer portion of the cornice is made up of a wide flat fascia *g*, Fig. 21, several smaller curved members *h*, the fillet *i*, and an echinus molding *j*, the whole topped with a comparatively narrow fillet, as shown in the illustration. The profile of the echinus in the cornice is similar to that in the capital, and will be more fully described under the particular heading of moldings later on.

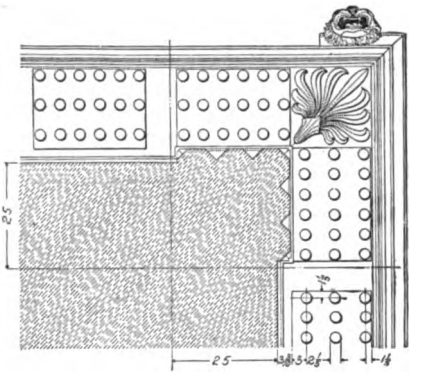

FIG. 23.

---

### THE ROMAN DORIC.

**35.** The Roman Doric order, shown in Fig. 24, is considered by architectural critics as a poor imitation of the Grecian Doric and inferior to it in many ways. In numerous details the former is similar to the Greek order, but, on the whole, is so modified that it would hardly be recognized as a descendant of the Grecian design.

**36.** The stylobate, as usual in the Roman orders, is in the form of a pedestal, and the column stands on a molded base never present in the Greek Doric. The flutes of the shaft are somewhat similar to those of the Greek order, but are composed of circular instead of elliptical arcs. The details of the stylobate are clearly shown in Fig. 24, and since

Digitized by Google

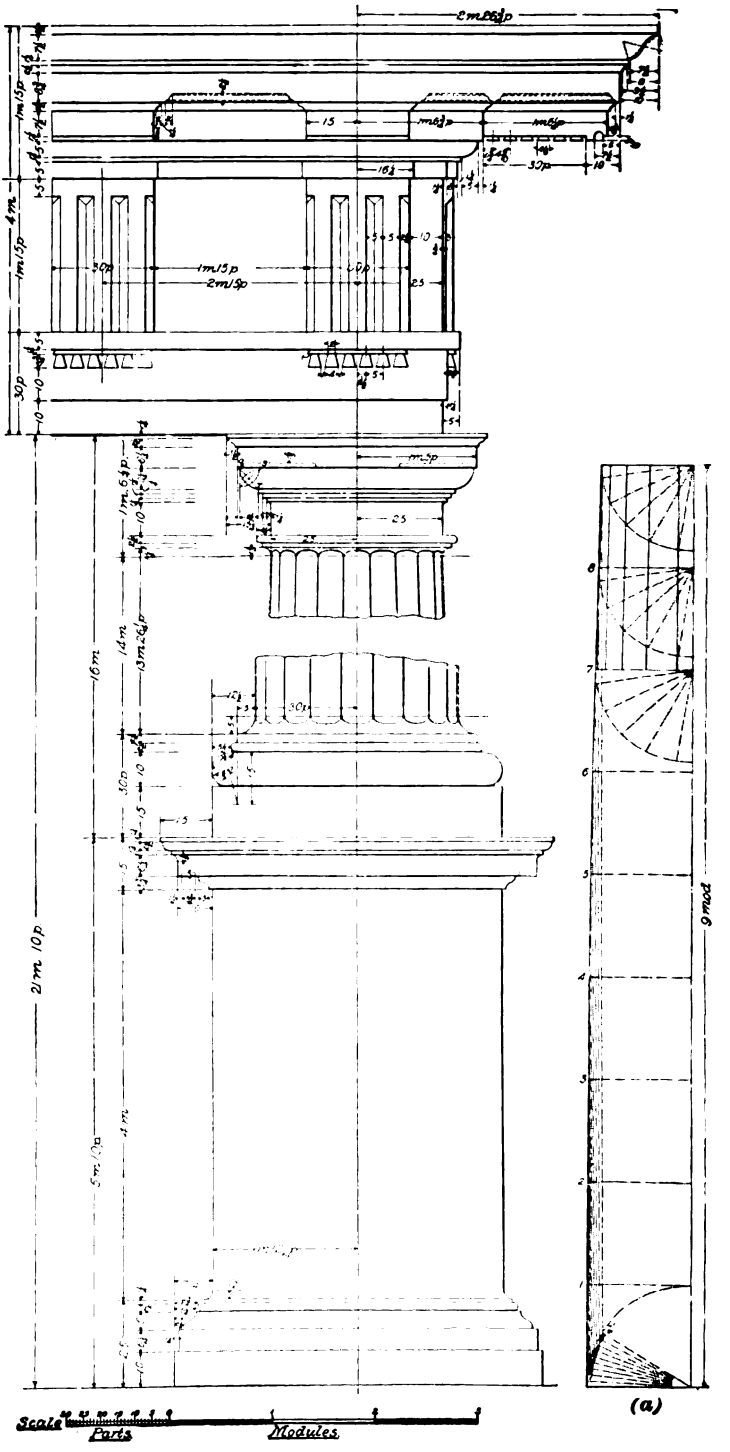


FIG. 24.

Digitized by Google

they bear a close resemblance to those of the Tuscan order, minute description will be omitted. The base of the column is also quite similar to that of the Tuscan, and will be passed over without particular mention. The method of tracing the curve for the entasis is clearly shown in the drawing at (*a*), and the quadrants in the upper portion of this figure indicate the method employed to produce the foreshortened views of the arrises. The outlines of these quadrants are first divided by spacing into the number of parts required for the flutes, and the points of division are then projected to the horizontal drawn from the center of the quadrant; the foreshortened curve that represents the position of the arris is then drawn through the several points located on the horizontal lines, in the manner shown in the upper portion of the view at (*a*).

**37.** The capital of this column, unlike that of the Grecian Doric, is seen to contain a pronounced astragal, or neck molding, composed of a quarter-round, a fillet, and a torus mold. The bell, or vase, is cylindrical and frequently contains small acanthus rosettes, usually eight in number, while the upper edge is finished with a quarter-round member, topped by several small, squarely projecting fillets that serve as base molds for the large quarter-round at the top of the capital. This quarter-round member is usually enriched with a boldly cut egg-and-dart molding not shown in the illustration. The abacus is square in plan and consists of a wide fascia finished at its upper edge by a small molding consisting of a cyma reversa and a small fillet. An enrichment in the shape of a lotus-leaf molding is often found on this cyma reversa. The under surface of the abacus usually contains spandrel-like panels, sunk as indicated by the dotted lines in the illustration.

**38.** There are two distinct systems of grouping the members of the Roman Doric entablature: one, as in the Greek, with mutules in the frieze; the other, an entirely Roman invention, with a course of dentils under the corona.

Digitized by Google

The mutular Doric is the one shown in Fig. 24. The mutules are here seen to assume more nearly the pronounced appearance of brackets, or modillions, while the general details of the entablature differ materially from the Greek order already described. The architrave is divided into two fascias, the upper one projecting slightly over the lower, while the upper fillet of the architrave is quite similar to the Greek. As before, the surface of the frieze is broken by triglyphs, which in the Roman Doric are centered exactly over the column except when occurring over the interspaces.

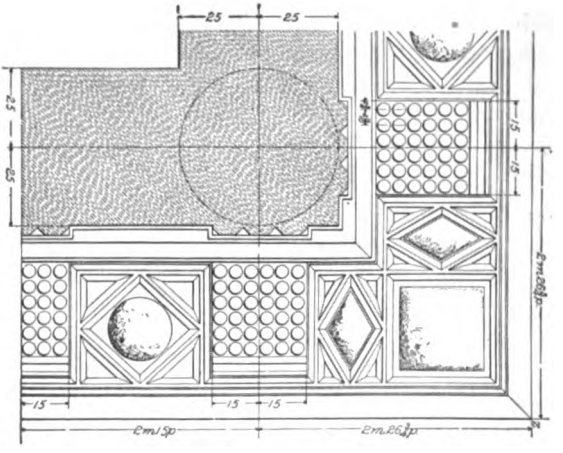


FIG. 25.

The metopes, which were always square in the Greek order, are often oblong in the Roman, with the longer axis set either vertically or horizontally.

The mutules, which we have before noticed as being set over each triglyph and metope, are found only over the triglyphs in the Roman Doric, while the soffit of the corona, or the planceer, between them is often paneled in lozenge or rectangular forms. The centers of such panels frequently contain irregular-shaped rosettes, as may be seen from the plan view of the soffit shown in Fig. 25. The dentil-like drops that appear in the architrave under the

Digitized by Google

triglyphs have a distinctive form characteristic of the Roman Doric. This form will be understood if the student compares the front and side views shown on the face and on the return, respectively. The corona, or crown molding, consists of a wide flat fascia, small fillets and a cyma reversa, and a large cyma recta topped with a rather wide fillet. The attention of the student is called to the amount of projection seen in the crown molding of this order—a proportion greater than has been given to any of the orders yet described. The principal features of the design are noted in the illustration by the aid of the scale of modules and parts, and will be found of much assistance should the student have occasion to adapt any of the proportions here shown to his working details.

## THE IONIC ORDER.

### THE GRECIAN IONIC.

**39.** The Ionic order is lighter and more delicate than the Doric. It is expressive of grace and refinement rather than of grandeur and dignity. The typical Grecian Ionic is illustrated in Fig. 26, from which it may be seen that the capital is the distinguishing characteristic of the order, although details of a widely different character from the Doric appear in nearly every feature. As in the Grecian Doric, the stylobate is in three equally receding courses, or steps, their united height being equivalent to about one diameter, or two modules. Of these three steps, only the upper one appears in Fig. 26, but the entire stylobate may readily be represented when required, in accordance with preceding instruction. The column, consisting of base, shaft, and capital, is taller, of more slender proportions, and much less tapering than any we have thus far considered. The base of the column, as may be seen from Fig. 26, is a graceful combination of torus and scotia moldings separated

Digitized by Google

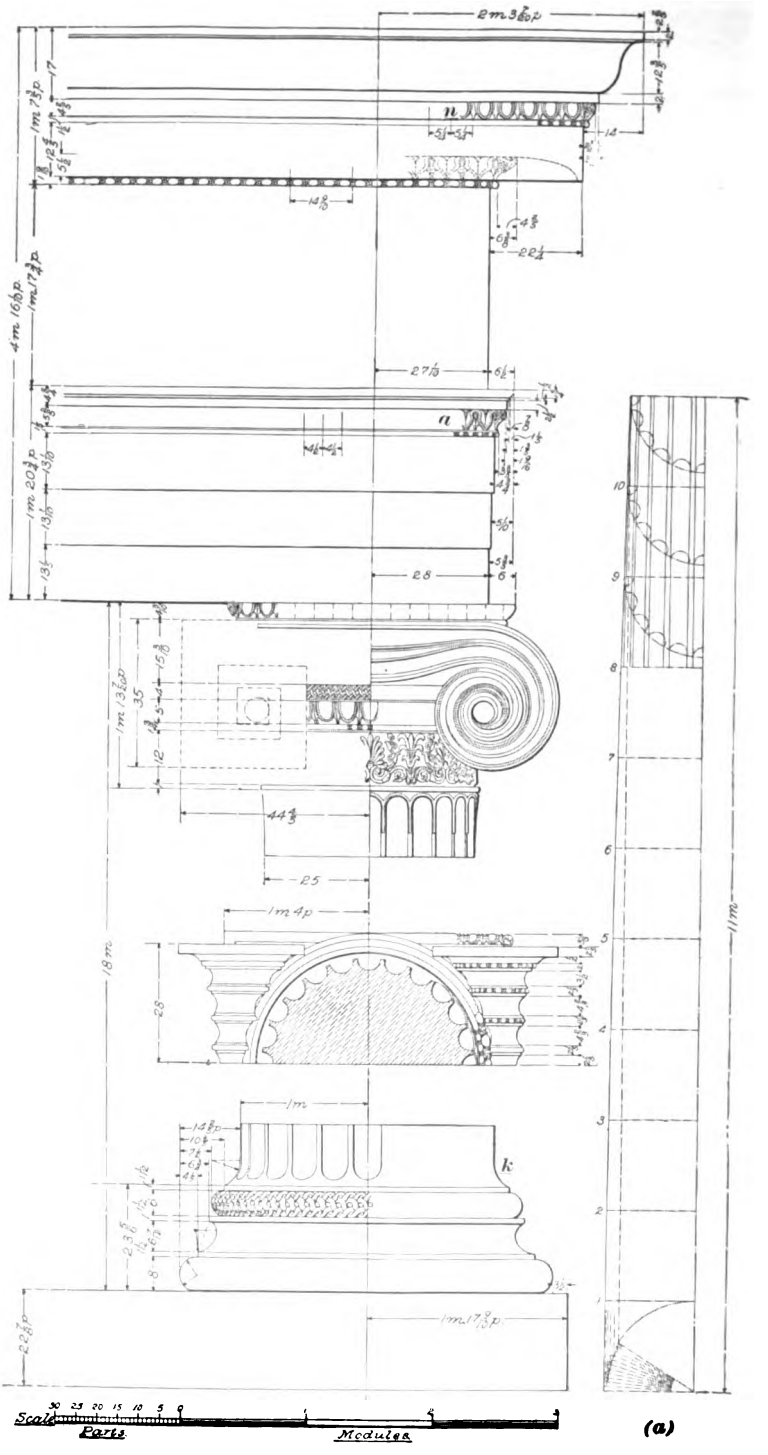


FIG. 26.

Digitized by Google

by the usual fillets. The upper torus is frequently enriched by an interlaced design peculiar to the Grecian moldings. The shaft of the column rises from the base by means of the escape *k*, whose profile, as in the case of most Greek moldings, is an outline taken from one of the conic sections. The shaft of the Ionic column contains twenty-four flutes separated from one another by fillets. These flutes are very nearly semi-elliptical in profile and the width of the fillets is about one-fourth that of the flutes. The method of determining the curve, or entasis, of the shaft is shown in the drawing at (*a*), and is similar to that already described.

**40.** The capital of this order is complete with astragal, bell, and abacus, all of which are enriched with more or less elaborate carving, although the astragal is sometimes represented merely by a small squarely projecting fillet. The bell of the capital is ornamented on the cylindrical portion with a scroll and the conventionalized anthemion leaf much used by the Greeks. Above the cylindrical part of the bell may be seen several enriched moldings in which occur the bead, the egg-and-dart, and the laced design previously referred to. This arrangement of the bell may be termed the regular formation, and is occasionally departed from. Thus, examples are to be found in which only the straight cylindrical sides of the bell appear, although the anthemion enrichment is present as in the case of the capital represented in Fig. 26. Again, as in Fig. 27, the straight sides of the bell give place to a tapering form enriched with a bold egg-and-dart molding. The capital represented in Fig. 27 illustrates a certain irregularity of construction that will be referred to later.

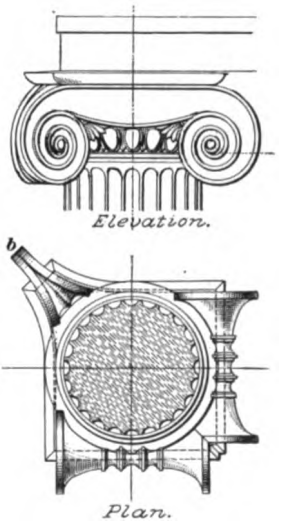

FIG. 27.

Digitized by Google

**41.** The principal distinguishing feature of this order is the volute, which may be variously considered as an appendage either of the bell or of the abacus. The graceful curves of this spiral are arranged in pairs, which, in what may be termed the regular formation of the capital, appear on the front parallel to the architrave. A view of this capital from the rear is the same as the front view, while in the side view shown in Fig. 28 the outer curve of the volute is carried back so as to appear like a bolster supporting the architrave. The surface of this bolster in the side view is broken by a series of flutes and fillets, somewhat after the manner of the column, although the fillets are often enriched by the addition of the small bead mold seen in other parts of the order. The profile for the general curvature of the bolster, as indicated in the side elevation in Fig. 28, coincides with the outline of an ellipse. The method used by the Greek architects in executing the spirals of the Ionic columns remains to this day a matter of more or less conjecture. They are very closely approximated in the illustration, however, and their reproduction may be accomplished, when desired, by the application of the scale.

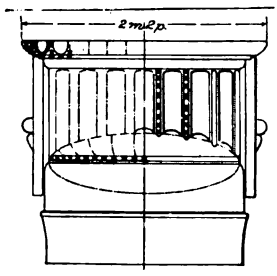

FIG. 28.

When an Ionic column occurs at the corner of a building, and particularly when the colonnade is continued down the sides of the building—or, as it is termed, on the return of the building—two adjoining voluted faces are frequently used. This is done that the corner column may agree with the other columns on the front and on the return of the building. When this construction is followed, the volute at the angle is placed diagonally, as shown at *b* in the plan in Fig. 27. The upper member of the capital, the abacus proper, is usually square in plan and consists principally of an echinus enriched with some form of ornamental carving, generally that of the egg-and-dart shown in Fig. 28.

Digitized by Google

**42.** The Ionic entablature is rather more plain than that of the Doric and consists, as before, of three principal subdivisions: architrave, frieze, and cornice. The architrave does not differ materially from that of the Doric; it is usually divided into three nearly equal fascias, successively projecting as represented in Fig. 26. Above the three fascias is a foot mold composed of torus, cyma reversa, and fillets arranged as shown. The small bead mold previously referred to appears below the enriched cyma reversa, which is usually ornamented with a molding known as the water-leaf ornament. A wide plain frieze in this order is topped with another bead mold and cyma with water leaf somewhat larger than that used in the foot mold. The soffit, or planceer, of the cornice has a pronounced drip—so much, in fact, as nearly to hide the bed mold when shown in a projection drawing. The principal features of the cornice, as before, are the wide fascia and the large projecting cyma recta, although a series of small moldings somewhat enriched are usually interposed between them. In many examples of the Grecian Ionic order, the topmost fillet and the large cyma shown in Fig. 26 are omitted, and the enriched echinus at *n* is made proportionately larger, thus forming the crown for the cornice. This form, however, has not been extensively copied in modern architecture.

---

### THE ROMAN IONIC.

**43.** The Roman Ionic order differs from the Grecian order principally in the formation of the volutes of its capital. There are, however, several other important changes in the details of its construction deserving of attention, as may be seen from an examination of Fig. 29. The characteristic Roman stylobate in the form of a pedestal is taller and more slenderly proportioned than in any Roman order thus far examined, while the moldings at its upper and lower extremities are distinguished by their richness and

Digitized by Google

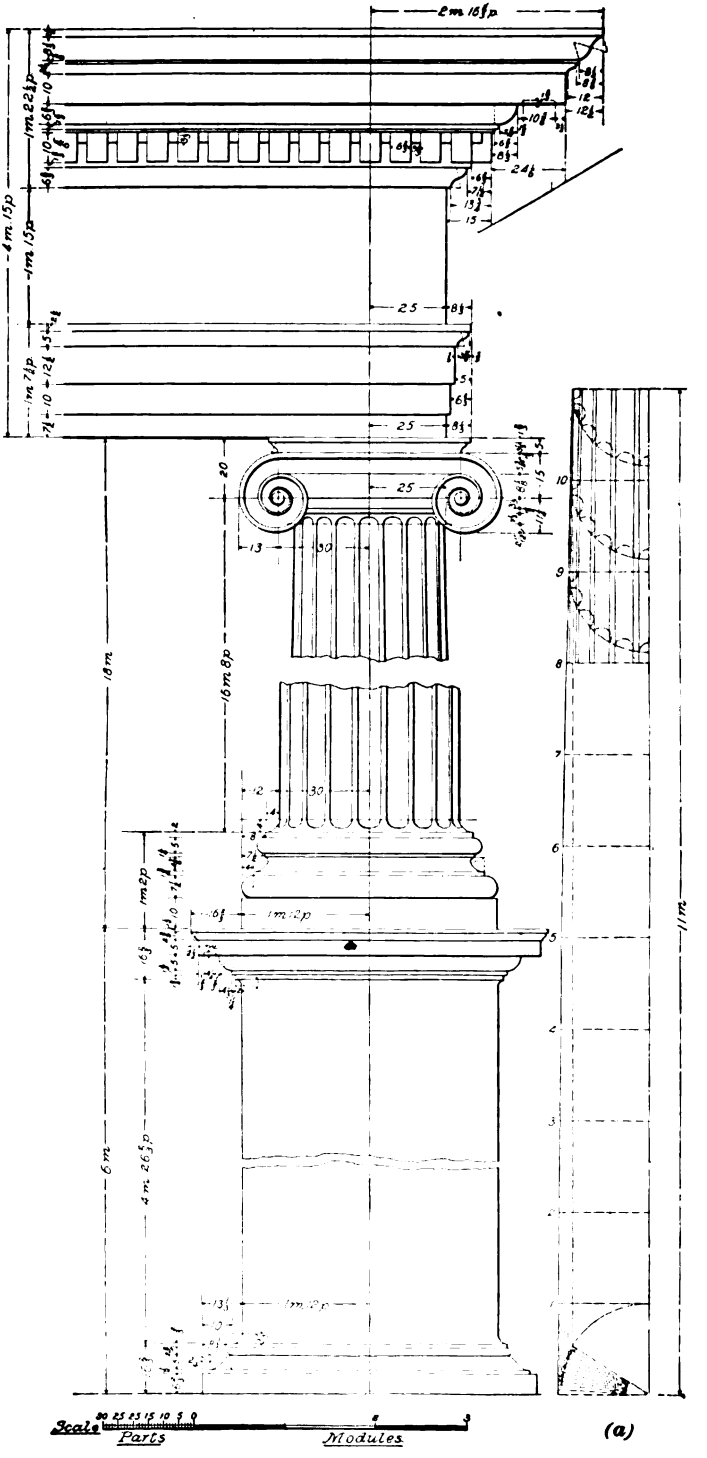


FIG. 29.

Digitized by Google

grace of profile. The base of the column differs in general contour from that of the Grecian order only in the fact that it is supported by a square plinth. A scotia with fillets and two torus molds—the latter seldom, if ever, enriched in this order—compose the profile for the circular base from which the shaft rises by a quarter-round escape, as shown in Fig. 29. The method of finding the entasis of the shaft is illustrated at (*a*). The shaft of the column is of nearly the same height as the Greek and contains either twenty or twenty-four semicircular flutes, separated by fillets. These flutes die away at the top and the bottom of the shaft in quarter-round escapes, as illustrated in Fig. 29.

**44.** The capital of this order contains no astragal, a circumstance rendered the more remarkable by the fact that when the Romans copied the Doric from the Greeks they added to that column an astragal not seen in the original, while in this case the Romans seem to have taken especial pains to omit the detail that they apparently particularly admired previously. In consequence of this, the Roman Ionic capital is far less pleasing than the Greek. The bell is short and is composed of a small torus and a rather large quarter-round mold seldom ornamented with any enrichment. The Romans greatly simplified the volutes of the capital in their attempts to reduce the Greek spiral to simple geometrical rules. As the compass was used to describe the profiles of their moldings, the same instrument was used to produce the volute by a series of tangent arcs of different circles. The Roman Ionic volute contains but one band, while that of the Greeks usually possessed three. The depression of these bands in their central portion is noticeable in the Greek capital, while in the Roman the band that connects the generating lines of the volute is seen from Fig. 29 to be straight. Careful directions for drawing the Roman Ionic volute were given in a problem of *Geometrical Drawing*, and therefore need not be considered here. As in the Greek order, the front and the rear view of this capital is similar.

Digitized by Google

When the Romans used volutes on the corner columns of their buildings, they were frequently mitered in a manner similar to that of the Greeks already shown in Fig. 27. A plan view of the capital is shown in Fig. 30, and it will be seen that it differs materially from the Greek formation already described, the curves for the return of the scroll being composed of a series of cymas and fillets. The abacus of the capital is shown in Fig. 29 as square in plan and composed of cyma reversa and fillet; this is the usual form of the abacus, although, in the case of mitered volutes, it is usual to allow the outline of the abacus in the plan to follow approximately the face of the volutes.

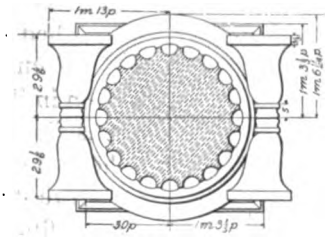

FIG. 30.

**45.** In the entablature, the architrave is divided into three fascias of unequal width, while the foot mold consists of a cyma reversa and fillet, although this combination of moldings is occasionally varied by the addition of a small torus below the cyma. Both curved molds are frequently enriched, the bead mold and the water-leaf ornament commonly being employed. The frieze of the Roman Ionic entablature consists of a plain wide fascia, unbroken by paneling and occasionally enriched by carving of figures and foliage. The cornice contains a rather wide dentil molding, finished below by cyma reversa and fillets, and above by a large ovolo with torus and fillets, as shown in Fig. 29. As in the case of the foot mold, the curved members frequently contain some conventional enrichment. The dentils are rather large and the spaces between them are usually one-half the width of the dentil face. The planceer is not so wide as in the Greek order, for the reason that much of the projection is attained in the dentil and bed moldings. A drip is afforded by means of the fillets at the outer and the inner extensions of the planceer, although

Digitized by Google

the drip is not so pronounced as in the case of the Greek order previously described. The crown molding of the cornice consists of a wide fascia and a large cyma recta with small members interposed, and is finished at the top by a fillet.

---

## THE CORINTHIAN ORDER.

---

### THE GRECIAN CORINTHIAN.

**46.** The highest achievement of Grecian architecture was realized in the Corinthian order—the lightest and most delicate of the three orders known to the Greeks. Like the Ionic, the principal characteristic of the Roman Corinthian order is its capital—tall, bell-shaped, and richly foliated, as shown in Fig. 31. The volute of the Ionic order, modified to some extent, occupies a prominent place in the decoration of the Corinthian capital, to which has also been added other enrichment in the form of conventionalized foliage.

**47.** The stylobate of this order consists of three equally disposed steps, as in the Grecian Doric order; on this stylobate, which is not shown in Fig. 31, the base of the column rests without the interposition of a plinth. The circular base of the column differs but little from that of the Grecian Ionic, although it is somewhat more delicately proportioned. The base is composed of a torus and fillet, a scotia and another similar fillet rather less than the former, and a second torus, or reversed ovolo, on which rests a third fillet.

**48.** The shaft rises in a curved escape and is taller in proportion to its diameter than in the orders previously described. It diminishes with entasis, particularly shown in the drawing at (*a*), Fig. 31, and contains, like the shaft of the Ionic column, twenty-four flutes and fillets. The flutes are semi-ellipses, and are so deep as to appear almost like semicircles; they terminate at the top in a peculiar formation resembling

Digitized by Google

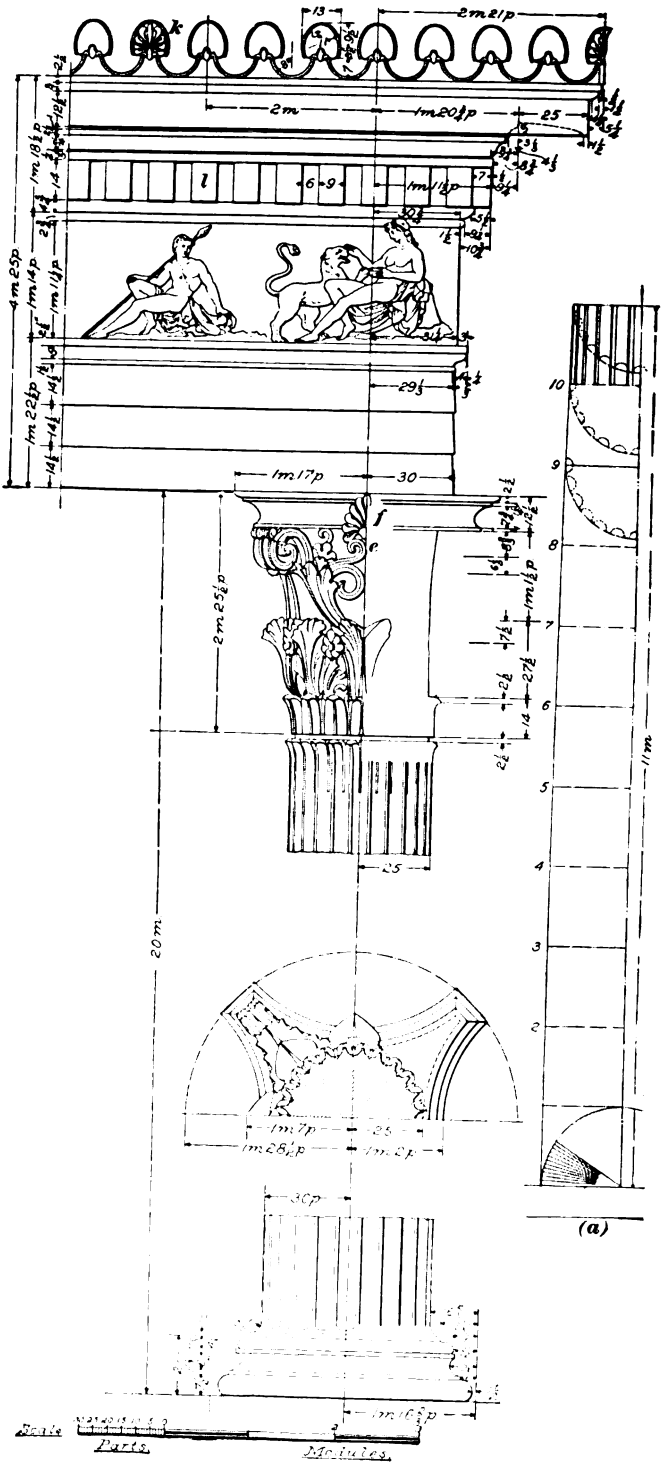


FIG. 31.

Digitized by Google

leaves, of which the fillets, as shown in Fig. 34, are the stems. This leaf-like finish to the flutes turns slightly outwards at its upper extremity, and, as in the Grecian Doric capital, the astragal is absent and is replaced by a shallow groove, or channel. The bell of the capital is nearly cylindrical in form, but slightly tapered at the top. Its lower extremity is covered with a row of water leaves similar to those forming the finish for the flutes of the shaft, but nearly twice their width—there being sixteen leaves in the circumference of the capital. Above the water leaves is a row of eight acanthus leaves, proportionately taller than the leaves in the lower row, and fastened to the bell by means of flowered buttons. The profile for the water leaves is that of a flat cavetto, and for the acanthus leaves it is that of a cyma recta. The general arrangement of these leaves is such that one of the taller ones in the upper row comes in the center beneath each face of the abacus, and the lower leaves alternate with the upper ones, coming both between and under the stems of the latter, so that in the first, or lower, tier of leaves there is, in the middle of each face, a leaf between each two leaves of the upper row, and also a leaf under the stem of the central leaf above them. Above these two rows is a third series of eight leaves turned so as to support the small volutes, which, in turn, support the angles of the abacus. Besides these outer volutes, which are invariably turned diagonally, as in the case of the four-sided Ionic capital, there are, on each face of the capital, two small volutes, termed cauliculi *e*, that meet each other beneath a flower *f* on the face of the abacus. The abacus is, in plan, a square whose angles are cut off at 45°, and whose sides are deeply concaved, this form conforming very nearly to the upper part of the capital. The abacus consists of a narrow fillet, an elliptical cavetto, or reversed scotia, and another fillet surmounted by a small ovolo—or rather a molding whose profile is that of the quadrant of an ellipse.

**49.** The entablature is very similar to that of the Ionic order, with the exception of the cornice, which is larger and



Digitized by Google

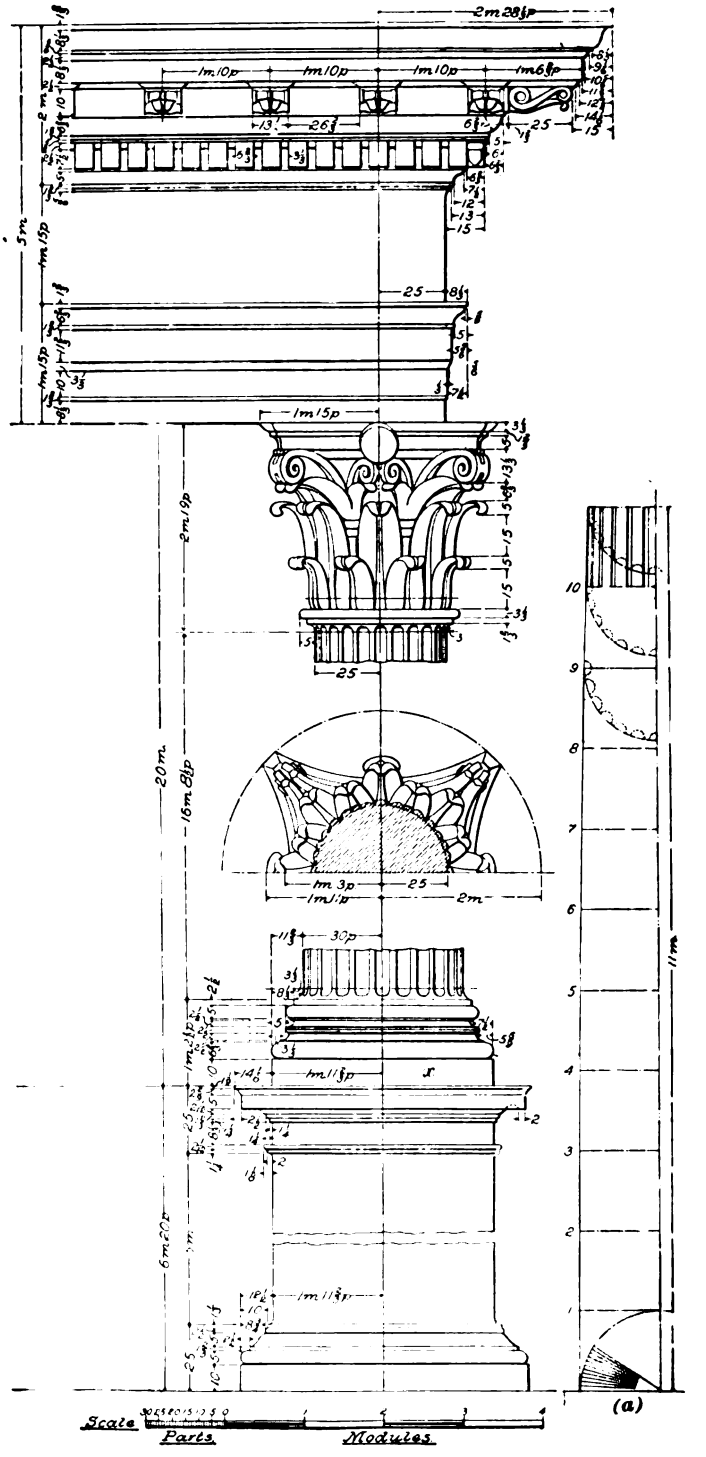


FIG. 32.

Digitized by Google

somewhat richer. The architrave contains three wide fascias of equal height; these fascias differ from those previously noted in the fact that their surfaces, in place of lying within vertical planes, are inclined inwards so that their lower angles are in the same vertical line. The foot mold is a simple cyma reversa resting on a small torus, or bead, and surmounted by a rather wide fillet. The architrave of this order seldom contains any enrichment of its members. The frieze is here shown with figures carved in relief, although it is true that this carving does not form a component part of the order itself. Above this frieze is a small torus and an ovolo supporting the dentil course *l*. These dentils are small rectangular blocks, spaced about two-thirds their width apart, and, in turn, support the bed mold, which consists of cyma recta, cyma reversa, and fillets, as shown in Fig. 31. The planceer of the cornice has a curved profile and is wider than in the Ionic order, giving the crown mold greater projection. The crown mold contains the usual wide fascia, together with a small echinus and a fillet; this fillet, as shown in Fig. 31, is surmounted by another wide fascia, cut at frequent intervals by elliptical arcs and supporting the peculiar honeysuckle ornaments *k*. An enrichment of this sort is often added to the tops of cornices other than those of this order.

---

### THE ROMAN CORINTHIAN.

**50.** The Roman Corinthian order, shown in Fig. 32, differs from its Greek prototype principally in the elaboration of its entablature and in the arrangement of the foliage of its capital. This order is, perhaps, the best known and the most widely copied of all the ancient orders of architecture. It appears to have been a favorite construction of the Roman architects, and we have several examples, slightly differing in their proportions, in structures of greater or less antiquity. The order illustrated in Fig. 32 may be taken as fairly typical of the principal features.

Digitized by Google

**51.** The stylobate is even more slender than in the Roman Ionic order, although quite similar in other respects; it contains, however, a small torus and fillet with escape a little below the upper series of moldings, not seen in any order thus far examined. The column shown in Fig. 32 rests on a square plinth *x* supported by the stylobate, but this plinth is absent in several of the notable ancient constructions, while others contain a double plinth under the base moldings of the shaft. This last construction is employed, however, only when the height of the stylobate is so great as to take the base of the column above the eye, in which case the coping cornice of the stylobate would cut off the view of the base of the column.

**52.** The base of the column generally consists of torus and scotia moldings with fillets intervening, as in the Grecian Corinthian, but these members are differently proportioned and differ also in the amount of their projection, as the illustration indicates. The members of the base are seldom enriched, although occasionally the surface of the scotia is broken by beads, or grooves, cut around the base. The shaft of the column usually diminishes with entasis that may be determined as shown in the drawing at (*a*), although not infrequently the profile of its sides is straight—that is, the shaft is treated as a frustum of the regular cone. Certain examples of this order do not contain any flutes in the shafts of their columns, presumably for the reason that the material used could not be wrought or polished. It is usually represented, however, as in Fig. 32, with twenty-four semicircular flutes that finish at their upper and lower extremities in semicircular ends aided by an escape of the shaft. A well-defined torus mold with fillet forms the astragal for the capital, the general appearance of which is not unlike that of the Grecian order already described. The bell is covered with two, and sometimes with three, rows of acanthus leaves, of which there are always eight leaves in each row, ranged side by side, but not in contact. The leaves of the upper rows appear to

Digitized by Google

reach down to the astragal, and their lower extremities are covered by the leaves in the row immediately beneath them. The formation of the leaves in the upper row is usually as shown in Fig. 32, and from their tops spring the cauliculi and volutes that support the abacus. The abacus differs but little from that of the Grecian Corinthian order; the outline of its plan is practically the same, while the moldings that compose it are the cavetto, fillet, and an ovolo, the latter usually enriched with the egg-and-dart ornament, and a rosette or flower of some kind is pendent from the middle of each side of the abacus.

**53.** The entablature of this order is quite different from any yet described. The architrave is divided into three horizontal bands, or fascias, as was the Ionic, but instead of a plain projection of one fascia beyond the other, they are separated by a number of different small moldings. These small moldings, and frequently the middle fascia as well, are enriched with elaborate carved molds, although shown in Fig. 32 without these appendages. The foot mold consists of small torus, cyma reversa, and fillet, the cyma often containing enrichment. The frieze, here shown as a plain wide dado, is usually ornamented with figures carved in high relief, and is topped with a dentil mold containing a torus and cyma. The dentils are plain rectangular blocks, spaced one-half their width apart, and support the modillion mold, which consists of fillets, torus, and a large ovolo. The modillions are the projecting brackets that support the corona, or crown mold, and are somewhat better shown in the enlarged view given in Fig. 33. The acanthus leaf and spiral are used with great effect in their construction, and the bed mold shown at *p* is carried around their upper edges, forming, besides a finish

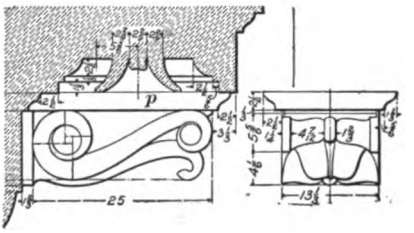


FIG. 33.

Digitized by Google

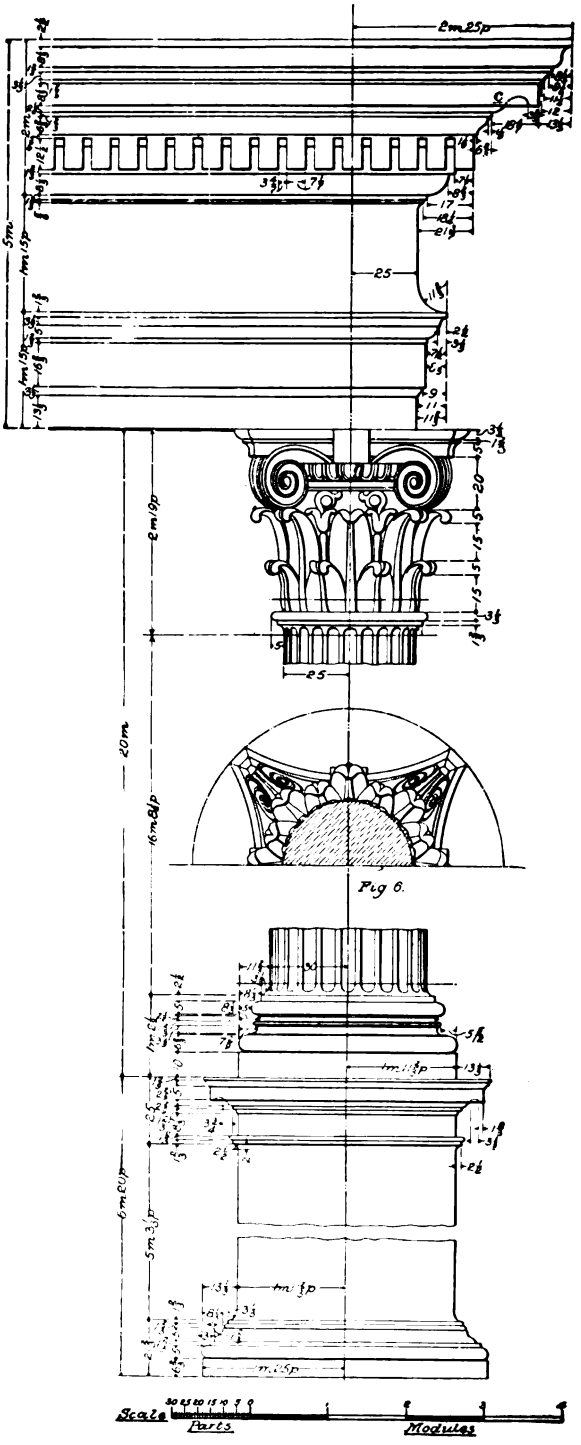


FIG. 34.

Digitized by Google

for the modillion, a paneled effect in the planceer. The planceer is wide and contains moldings arranged in panels with rosettes in their centers. The corona consists of the usual wide fascia and cyma recta with interposed smaller molds in which may be seen the cyma reversa and fillets. Above the large cyma a rather wide fillet finishes the cornice. Heads of lions, and, in some cases, grotesque heads, are added to the large cyma of the cornice, and are regularly spaced over every other modillion in the entablature; they are not shown, however, in the illustration here presented.

---

## THE COMPOSITE ORDER.

**54.** This order was an invention of the Romans and is a result of their attempt to secure something more elaborate than the Corinthian. It is practically a combination of the Corinthian with the Ionic, and its proportions conform very closely with those of the former, as shown in Fig. 34. As a matter of fact, the ancient examples of what is called the Composite order do not differ so much from the ordinary examples of the Corinthian as the latter do among themselves, with the exception of the peculiar formation of the capital. The Composite order appears to have been invented by the Romans solely for the purpose of displaying heavily enriched members in the moldings of the entablature. It was used, at first, only in the construction of their triumphal arches—structures in which highly elaborate effects were desired without apparent consideration of their cost.

**55.** As seen in Fig. 34, the stylobate of this order differs from that of the Roman Corinthian only in the formation of the moldings. The proportions of the column also are the same as in the order last described. The moldings of the base and the flutings of the shaft, together with its

Digitized by Google

entasis and the astragal of the capital, may be taken directly from the drawing of the Corinthian in Fig. 32. The principal difference in the capital consists in the enlargement of the volutes and in the connection of their stems horizontally under the abacus, giving the appearance of a distorted Ionic capital. An enriched egg-and-dart mold in the form of an ovolo, together with a small bead mold, is usually added immediately under the abacus and between the volutes, as seen at *g*, Fig. 34. Acanthus leaves in two rows fill up the whole height from the astragal to the bottom of the volutes, and are consequently higher than in the Corinthian capital, the increased height being given to the upper row of leaves. The abacus is so nearly like that of the Corinthian capital as to need but little description; its moldings are the same in form, and it contains an ornament, in the center of its face, similar to that already described.

**56.** In the entablature, the architrave contains two, and sometimes three, wide fascias separated by fillets and small cyma reversas, the latter seldom shown without enrichment. The foot mold, as shown in Fig. 34, consists of a graceful combination of small members, also usually heavily enriched. The wide frieze is sometimes finished at both upper and lower edges in an escape, and is often elaborately carved with figures in relief, as in the Corinthian order. Above the frieze, the various members of the entablature may be taken as identical with those of the Roman Corinthian, every curved member of which is frequently heavily enriched. Even the wide fascia of the crown mold is sometimes ornamented with elaborate carving, although shown plain in Fig. 34. In certain cases where this order is used, the modillions are omitted, as in the example shown in Fig. 34. This, of course, cuts down the projection of the corona, for the bed mold is then placed immediately above the modillion molding and the planceer is proportionately shortened. The planceer is usually given the form of a cyma in such cases, as shown at *c*, in Fig. 34.

Digitized by Google

# ARCHITECTURAL FORMS.

## MODIFICATIONS OF THE COLUMN.

### PILASTERS.

**57.** In all the orders thus far considered, the column proper has been treated as a round or cylindrical form. A need arose, however, in many cases, for forms rectangular or square in plan, and we find such forms modified somewhat to resemble the column. Certain varieties of this form are called pilasters, or antæ, and are found more frequently in modern constructions than in examples of ancient architecture. For example, the face of a wall is frequently broken by square projections approaching the column in width and rising to a height similar to that of the column. When pilasters are intended to resemble the column, they may be considered as belonging to an architectural order, and should be given nearly the same treatment as the column of the order in which they are used. Like the column, they usually consist of base, shaft, and capital.

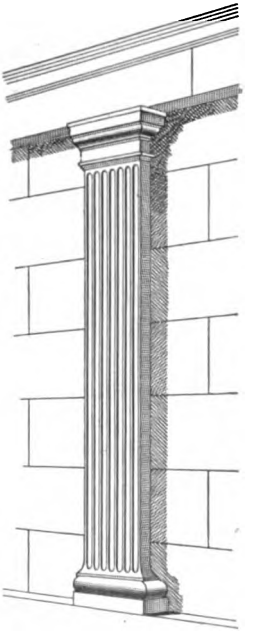

FIG. 35.

**58.** The base most commonly used is the Attic base shown in Fig. 35; it is seen to consist merely of a plain fillet and torus above the plinth block. When a pilaster is used to support the wall end of an entablature whose outer extremity rests on a column, as in Fig. 36, the

Digitized by Google

sides of the pilaster diminish with entasis in the same manner as do the sides of the column; but when no column is present, the pilaster is straight and its sides are parallel and perpendicular to the base, as shown in Fig. 35.

**59.** The shaft may be either fluted or plain, at the discretion of the builder. If the pilasters are fluted, either seven or nine grooves are used, as desired, except where a pilaster is returned on the angle of an inside corner, as in Fig. 37, when four or five flutes should be cut on each face

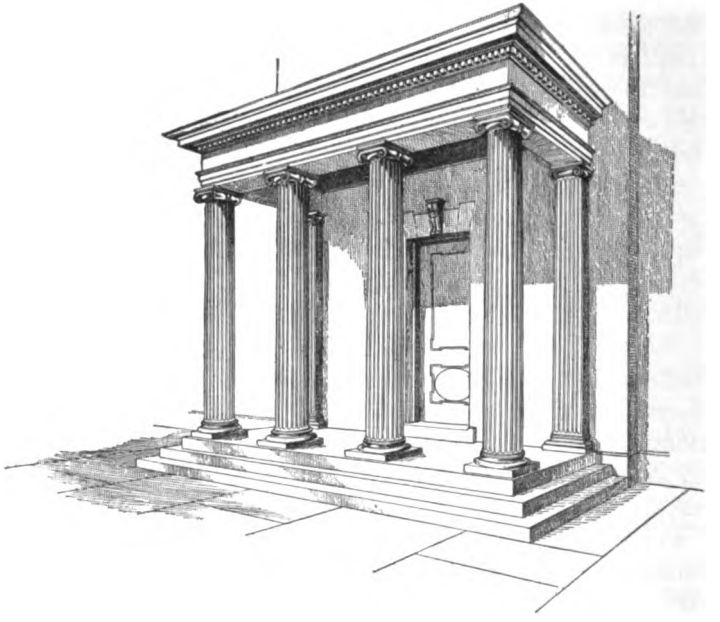

FIG. 36.

in order to avoid bringing a flute into the angle. When a pilaster is returned on an exterior corner, a full-width face is shown on each side of the angle, as in Fig. 38. Pilasters should project from the face of the wall in proportion to the load they are assumed to carry—amounts varying from one-fifth to two-thirds being considered extremes. When

Digitized by Google

pilasters project less than one-half of their diameter, the return faces are not fluted, but appear as shown at *c*, Fig. 37.

**60.** The capitals of pilasters differ widely even when they are used in connection with one or more columns of the architectural orders previously described. Occasionally, the capital will be a modified form of the proper classic capital of the order in which the pilaster is used, but more often it is merely a series of plain moldings more or less

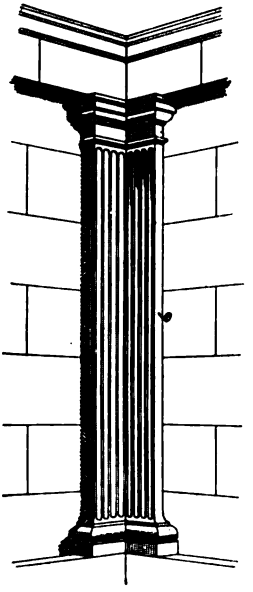

FIG. 37.

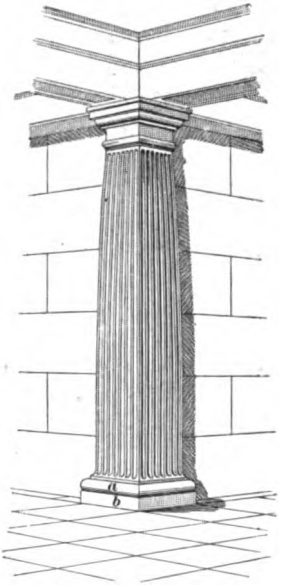

FIG. 38.

enriched according to the character of the structure in which the pilaster is used. The moldings of the Tuscan and Doric capitals very readily lend themselves for use on a square pilaster. The Ionic and Corinthian capitals are frequently reproduced on square pilasters, but the artistic effect may be questioned.

Digitized by Google

### CLUSTERED COLUMNS.

**61.** Certain styles of architecture of less antiquity than the classic orders already described are distinguished by what are known as clustered columns. An example of such a column is shown in Fig. 39. It usually consists of a somewhat complicated group of small shafts surrounding a central core. In some cases the central core is square or octagonal in plan, with half-round columns against its sides; in other examples a number of round columns are grouped together and mitered in the same way in which a carpenter would miter his moldings, that is, by cutting vertically

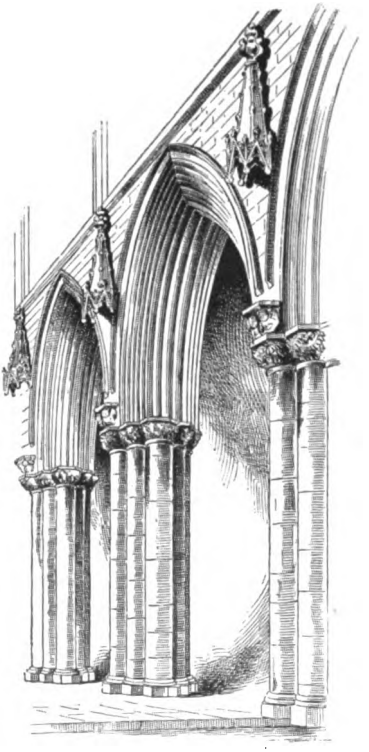

FIG. 39.

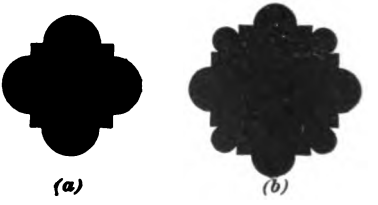


FIG. 40.

through the columns on regularly established miter lines. A plan of the column first described is shown at (*a*), Fig. 40, while a plan of round mitered columns is represented at (*b*), Fig. 40.

---

### BALUSTERS.

**62.** Another architectural form somewhat related to the column is the baluster. It is primarily used to support a hand rail placed in front of windows or around enclosures

Digitized by Google

for balconies, and is frequently utilized as an ornamental finish on the roof line of a building above the main cornice. A balustrade is essentially a series of balusters with base and cap rails, and may be placed between columnar pedestals or it may have independent angle piers with intermediate piers to strengthen its construction. It should always partake of the general characteristics of the structure of which it forms a part. The balusters in any panel should always be odd in number and should be so spaced that the distance between them will be equal to half their largest diameter. In order to determine the best proportions to give the different parts of the balustrade, the whole height should be divided into thirteen equal parts, as shown in Fig. 41, of which the height of the baluster is eight parts, that of the base three parts, and that of the cornice, or rail, two parts.

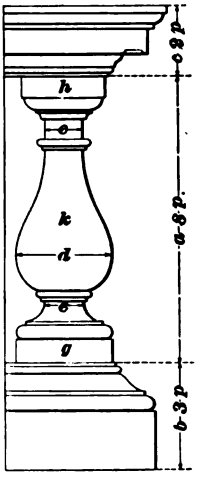

FIG. 41.

**63.** Balustrades intended for actual use in a building—that is, when they are intended to serve the purpose of a hand railing—should not be less than 3 feet nor more than 3 feet 6 inches in height. When used for purely ornamental purposes, however, as in crowning the main cornice of a building, the balustrade should bear some proportion to the parts of the building—that is, it should never exceed four-fifths of the height of the entablature. The balustrade may be placed on a plinth if necessary to raise it so that the entire balustrade can be seen from the best point of view for the building itself. The baluster varies in shape and proportion of thickness to length of shaft in accordance with the order in which it is used. The plinth *g* and the abacus *h* are always square, and the shaft, or, as it is sometimes called, the vase *k*, is nearly always round. When the balustrade is used in connection with the Tuscan order, however,

Digitized by Google

the vase is sometimes made square in plan. The thickness of the baluster at *d*, the heaviest part of the vase, should correspond with the diameter of the plinth *g*, and should be equivalent to about three of the thirteen parts into which the whole height of the balustrade is divided. The abacus should be about one-seventh less than the width *d*, while at *e*, *e*, the two slender portions of the vase, the thickness should be about one part. The proportions just given may be assumed as correct for use with the heavier orders, as the Tuscan and the Doric, while balusters of more slender proportions may be constructed for the later orders.

---

## CLASSIC MOLDINGS.

**64.** Moldings serve a twofold purpose in architectural construction: first, they give variety to the outline of the principal divisions of an order, such as the base, capital, entablature, etc.; and, second, they serve to divide the vertical surfaces and cast horizontal shadows to emphasize the divisions, thus preventing a monotonous appearance in the general mass. The profile of the molding is of vast importance, since on its contour depend the strength and depth of the shadows and the character of the outline. This feature was recognized by the ancient architects to its fullest extent, and in the principal divisions of the orders into Grecian and Roman interpretation, we find two entirely different systems employed. It has already been noted that Grecian architecture is distinguished by the grace of its proportions and by the beauty of its outlines, which, in nearly every instance, are found to follow the curves of the conic sections, generally the parabola or the hyperbola. Occasionally an outline is encountered whose profile is that of the ellipse, and very rarely the circle. Roman moldings, on the contrary, are nearly always formed from the arcs of one or more circles, and for this reason their profiles are deficient in that expression of delicacy and refinement that characterizes the details of the Greek monuments.

Digitized by Google

**65.** The principal moldings found in classic architecture are eight in number. Each is known by a name descriptive of its shape or general purpose. Inasmuch as the Roman moldings are identical in name and similar in purpose to their Grecian prototypes, the two varieties may be studied simultaneously in the following text. The Grecian molds are designated in the illustrations by upper case, or capital, letters, while those of Roman construction are indicated by lower case, or small, letters.

**66.** The fillets *A*, *a*, Fig. 42, are simply square-edged bands in both orders, and are rarely ornamented. They are generally used in connection with some other molding, and are frequently employed to separate the individual members

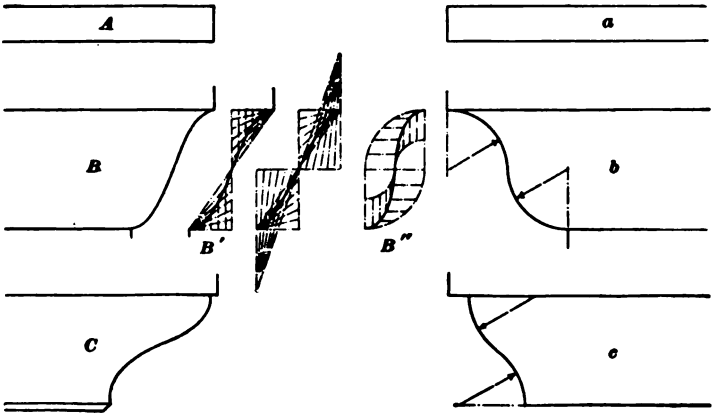


FIG. 42.

of a group of moldings, as in the base and capital of a column. They are also used to emphasize the divisional line between the surfaces of distinct members, as in the entablature between the architrave and the frieze. The fillet derives its name from a Latin word meaning a thread.

**67.** The undulated moldings *B*, *b* and *C*, *c*, Fig. 42, are known, respectively, as cyma rectas and cyma reversas,

Digitized by Google

which have been previously defined. The cyma recta is concave in its upper part and convex below, as shown at *B* and *b*, while the cyma reversa is convex above and concave below, as shown at *C* and *c*. The cyma recta is frequently seen in the crowning member of cornices, in which situation it acts as a hood, or covering, to shelter the lower members; on this account it is often referred to as a crown molding. It is not well adapted for use as a supporting member, and is rarely so used. It is frequently ornamented with designs of the honeysuckle, or anthemion, leaf or other floral devices, which are invariably carved in relief. The shadow of this molding is very sharp and distinct at the top and the bottom, blending off at the center where the full strength of the light is shown. The method of constructing the arcs for the cyma recta at *b* will be understood from the drawing. At *B'* is shown a cyma whose outline is that of the parabolic curve, the construction of which will appear if the formation of the dotted lines is closely studied. At *B''* the cyma is constructed with elliptical curves that will be familiar to the student who recalls a certain problem in *Geometrical Drawing*.

**68.** The cyma reversas *C* and *c* have all the varieties of curve possessed by the cyma rectas. As the name indicates, the curves are reversed from the position occupied in the cyma recta, and, as a rule, the curves themselves are more deeply cut. This molding is enriched more frequently than the cyma recta, and, unlike that molding, is well adapted for use as a supporting member. Both forms of the cyma are also known as the ogee, a term perhaps more frequently employed by trade workers than the more technical word cyma. The word cyma is derived from a Greek word meaning a wave, while the words recta and reversa define the position, and mean, respectively, upright, and reversed, or opposite.

**69.** The cavettos, or cove molds, shown at *D* and *d*, Fig. 43, are concave moldings whose outlines are almost

Digitized by Google

identical with the upper part of the cyma recta. They are used as crowning members and as a means of obviating the sharp angle that, without it, would occur between a fascia and a fillet. These molds are never used for base members and are never ornamented.

**70.** Moldings that have for their outline a form commonly known as quarter rounds are shown at *E* and *e*, Fig. 43. Here it is seen that the mold at *e* is composed of

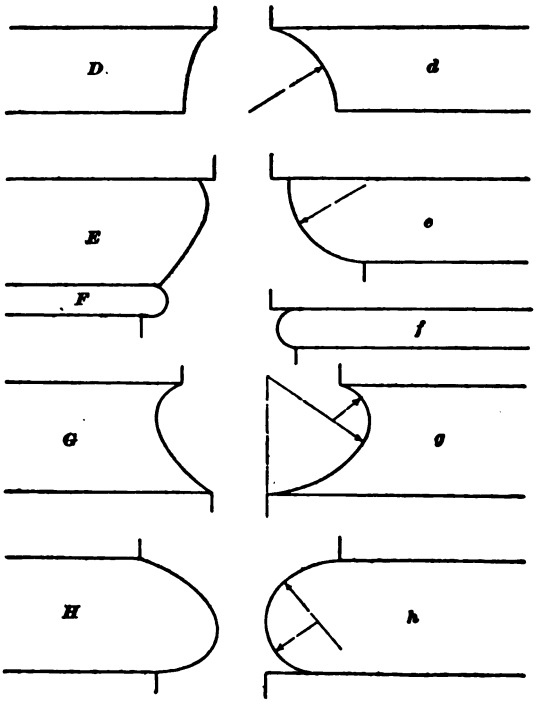


FIG. 43.

a quarter circle; this is the Roman form of the quarter round and is known as the ovolo. The Grecian form is known as the **echinus mold** *E*, Fig. 43, and is defined by an elliptical or parabolic arc. The outlines of both of these



Digitized by Google

molds correspond very closely to the upper portion of the cyma reversa. They are well adapted for use as supporting members, although seldom used in places below the level of the eye. The egg-and-dart ornament is a favorite enrichment for this molding, and is always cut into its surface—never carved in relief.

**71.** The **bead mold** is a small molding whose profile is rather more than a semicircle, as shown at *F* and *f*, Fig. 43. It is seldom used by itself, being found in connection with a fillet separating two larger or more important members, or else dividing a large vertical surface by a long broken shadow, as between the fascias of the Roman Corinthian architrave. The bead molding is nearly always carved into a series of globular and disk forms, from which it derives its name.

**72.** The **scotias** *G* and *g*, Fig. 43, are hollow moldings used almost entirely in the bases of columns between the fillets that accompany the two torus moldings. The contour of the scotia is identical with that of the reversed ovolo, and it casts a deep shadow. It is therefore most frequently used in positions that fall below the level of the eye, where it is in contrast and thus strengthens the effect of the adjacent moldings. The name *scotia* is from a Greek word meaning darkness.

**73.** The torus is the principal molding used in the bases of the columns in all the five orders; it is usually used twice, and the two torus moldings are separated by a scotia, as just explained. Torus molds are shown at *H* and *h*, Fig. 43. The upper torus of a base is usually the smaller, and produces, with the escape of the shaft, an effect similar to that of the cyma, while a corresponding effect is produced by the lower torus and the scotia.

**74.** Practice in the geometrical constructions necessary to produce the moldings here shown is essential to the

Digitized by Google

student, and he should endeavor to acquire a certain amount of proficiency in such work. Of much more advantage, however, will be the facility of producing close approximations to these curves by mere freehand methods. Freehand work should not be attempted at first, nor until the student has learned to recognize the curve needed for a particular place. After he has acquired this information, however, much time will be saved, when making detail drawings, if he is able to draw the required curves without instruments.

---

## PEDIMENTS.

**75.** The gable ends of structures are frequently finished with moldings similar to those used in the crown molds of their entablatures. A molding so used is shown in Fig. 44, and is called a **rake mold.** When a rake molding is finished

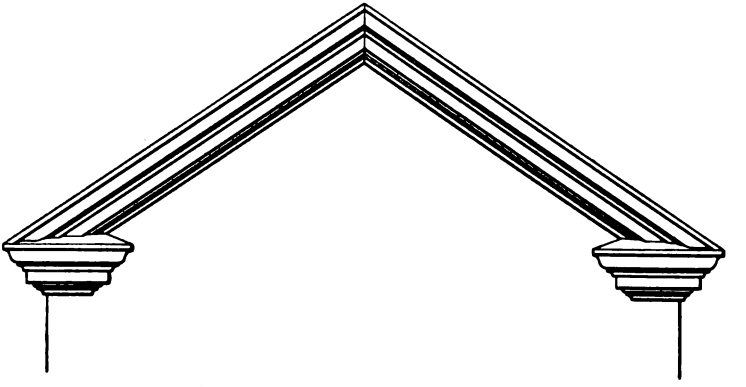

FIG. 44.

at its lower extremity, as shown in this illustration, on a return of the main cornice, it is customary to use, for the profile of the rake mold, an outline similar to that used for the members of the main cornice. In many cases, however, it is desirable to return the upper members of the main

Digitized by Google

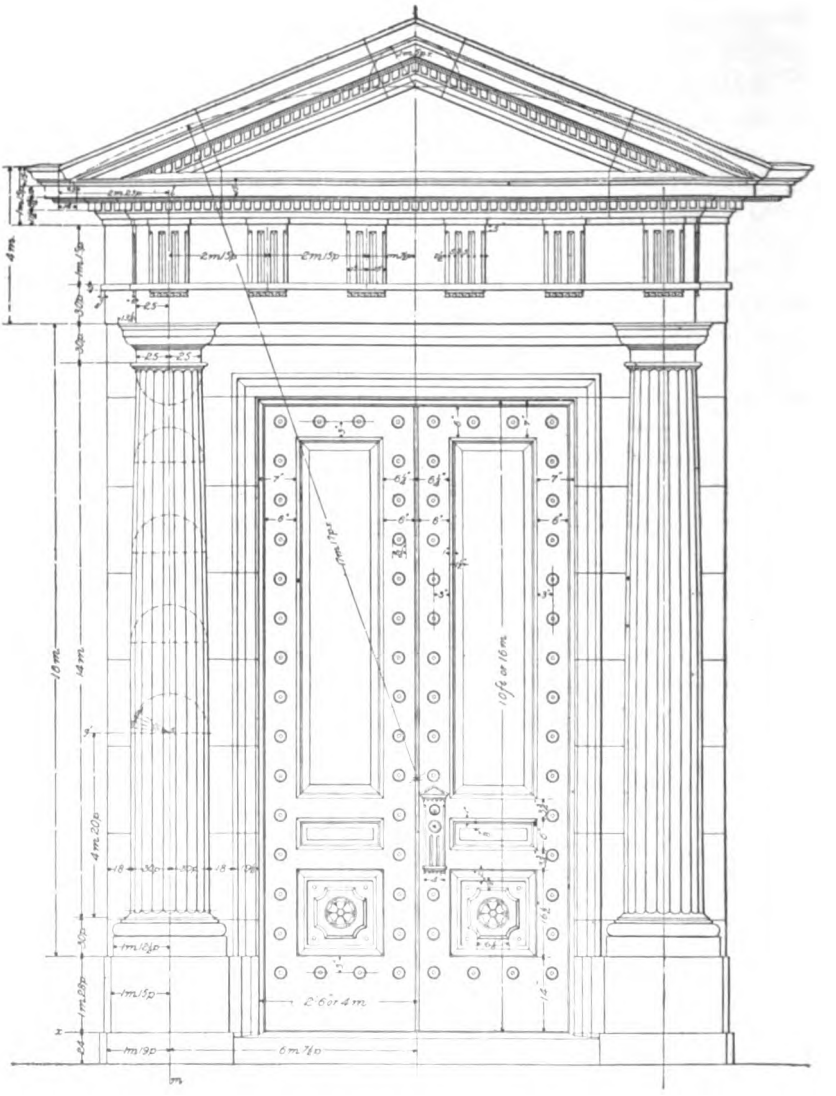

FIG. 45.

Digitized by Google

cornice along the line of the rake mold in the manner shown in Fig. 45. When such a construction is to be used, the profile of the rake mold must be determined by certain operations in projection drawing, in order to insure a correct miter of the several members. The method of finding this profile is shown in Fig. 46. The profile of the main cornice is first drawn in the usual position, as represented at (*a*). Points are next designated at the angular bends of the molding, as indicated by the letters *a*, *b*, *c*, etc., Fig. 46, and points are also located on the curved outlines of the other members by spacing such curves with the dividers, as at *1*, *2*, *3*, etc., Fig. 46. A series of parallel lines at the angle of the desired rake mold is then drawn through these points and extended some distance away from the miter. The view shown at (*b*) is next drawn; this view is merely a copy of the profile shown at (*a*), but is so placed as to be at right angles to the raking lines of the mold. Points must be located on the outline of this profile in the same relative positions as occupied in the view at (*a*); to assist the student in comparing the drawings, similar points in both views have been designated by corresponding letters and figures; thus, *a'*, *b'*, *1'*, etc. at (*b*) correspond in position to *a*, *b*, *1*, etc. at (*a*). The parallel lines in the rake mold are next intersected by perpendiculars drawn from the view at (*b*), and the profile of the required rake mold may then be drawn through the points of intersection, as shown in Fig. 46 at *a''*, *b''*, *1''*, etc.

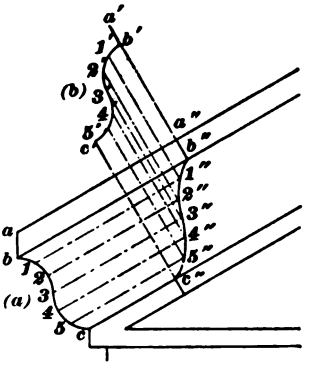


FIG. 46.

**76.** It sometimes happens that the original profile of a crown mold must be used for the rake mold, in which case the profile for the return must be developed by a process exactly the opposite of that shown in Fig. 46. This

Digitized by Google

construction is shown in detail in Fig. 47, in which the profile of the rake mold is represented at (*a*). Points are first located on its outline in the same manner as before described, and parallels that extend indefinitely toward the left in Fig. 47 are drawn through these points. A profile similar to that at (*a*), with division points spaced in a corresponding manner, is next drawn in the position shown at (*b*), and the reconstructed profile for the return molding is next traced through the points of intersection determined by the vertical projectors drawn from the view at (*b*).

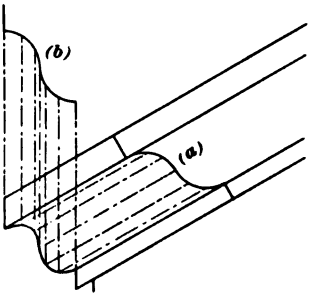


FIG. 47.

**77.** When a rake molding is large and great projection is required, members other than those of the crown mold are sometimes used. In such cases the brackets, or modillions, used in the main cornice are frequently added to the rake mold. The sides of such modillions should be kept in a vertical plane, as shown at *a*, *a*, *a*, Fig. 48, and not

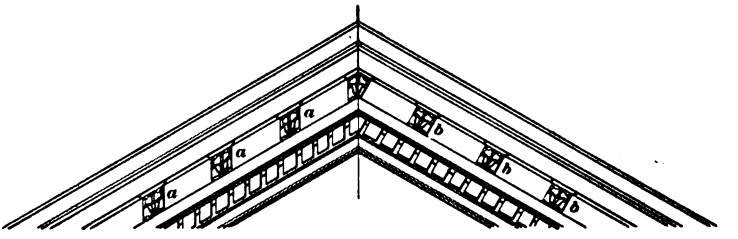


FIG. 48.

placed on the rake mold perpendicular to the lines of its members, as is sometimes incorrectly done. This incorrect use of the rake mold is shown at *b*, *b*, *b*, Fig. 48, and is never allowable in good practice. The method used in obtaining the profiles for the raking modillion is quite similar to that used for the profile of the molding, and will be understood from an examination of the drawing.

Digitized by Google

**78.** When rake moldings are employed to finish the ends of a roof, as in Figs. 44 and 45, they are often referred to as gable moldings. They are used also in connection with the **pediment,** an ornamental form of gable frequently placed over door or wide window openings, and sometimes over the tops of the main cornices of structures. A variety of this architectural form, known as the broken pediment, is shown in Fig. 49, in which it will be noticed that the molds, in place of being continued to the upper miter, as in Figs. 44 and 45, are cut off in a particular manner some distance below. An urn or other ornamental

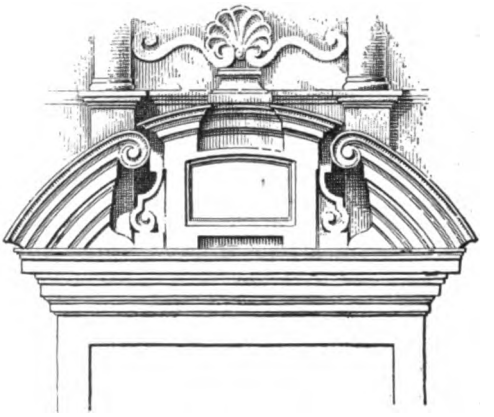

FIG. 49.

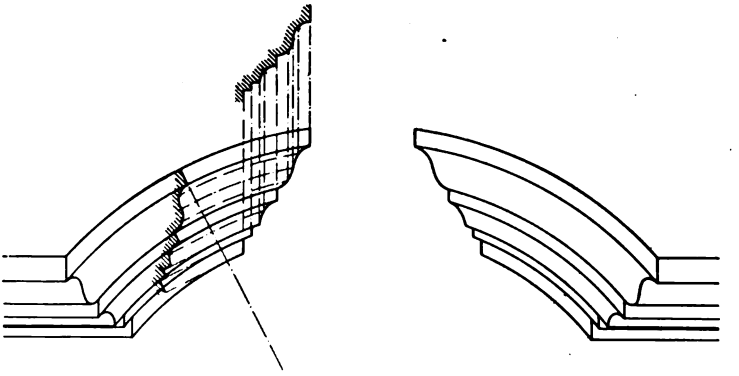

FIG. 50.

form usually occupies the open space at the top of these pediments, while the members of the rake mold are returned in a profile obtained in a particular manner. This

Digitized by Google

profile is determined by an operation in projection drawing similar to that already explained.

**79.** The drawing in Fig. 50 represents the method used in finding rake profiles for circular molds and also for determining the profile of an upper return in a broken pediment whose rake molds are described with circular arcs. This drawing is constructed by a process similar to that used in Figs. 46 and 47, and should be understood by the student without further explanation.

---

## ARCHES.

**80. Names of the Different Parts.** — The principal parts of the arch will be understood after an examination of Fig. 51, which represents an ordinary semicircular arch. From this drawing it is seen that the curve of the arch rises, or, to express its formation in the terms usually employed

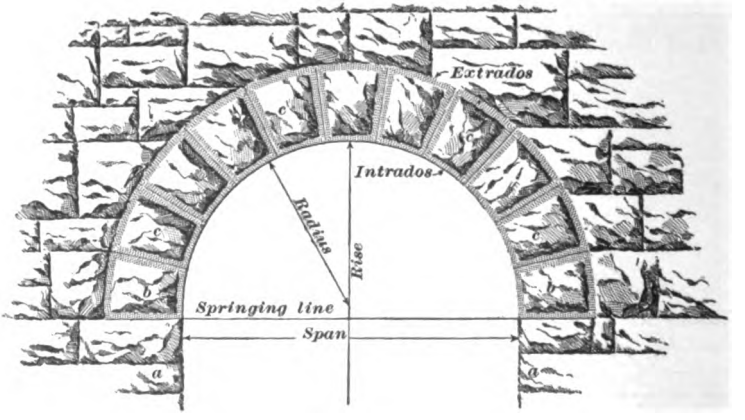


FIG. 51.

when speaking of arches, the arch *springs* from two piers *a*, *a* on either side of the opening. These piers are called **abutments,** and a line drawn across the opening from the tops of these piers is called the **springing line,** or **spring line,**

Digitized by Google

of the arch. The stones that rest on the abutments, and in which the first indication of the curve of the arch is noted, are called **skewbacks,** shown at *b*, *b*. The arch itself consists of wedge-shaped stones *c* called **voussoirs,** or **ring stones.** The voussoirs are sometimes of varying sizes, but for the same arch are generally made as nearly uniform as possible. The center stone at the top of the arch is called the **keystone,** and is always so placed that a vertical center line drawn through the opening covered by the arch passes through its axis. The voussoirs between the keystone and the skewbacks are collectively called the **haunches** of the arch. The under surface of an arch is called its **soffit,** and the line that represents the curve of the soffit—that is, the line that defines the clear opening through the arch in Fig. 51—is called the **intrados.** The line parallel to the intrados that defines the outer ends of the voussoirs is called the **extrados.** The **span** of an arch is the horizontal distance between the abutments, and the **rise** is the distance of the extreme vertical height from the springing line to the intrados.

Certain rather intricate problems in engineering are involved in the construction of arches, and for this reason their use among the ancients was rather limited. As already mentioned, the Romans were the first to make important use of the arch, and several examples of their work are in existence at the present day.

We shall now proceed to a brief examination of several varieties of arches, paying attention only to their general forms.

---

### KINDS OF ARCHES.

**81.** Arches are frequently named, from the curve of the intrados, as semicircular, elliptical, pointed, etc. The **semicircular arch,** as its name indicates, is one whose intrados is a half circle. This variety has already been referred to in the description of Fig. 51.

Digitized by Google

**82.** The **segmental arch,** shown in Fig. 52, is one in which the intrados is generally an arc of long radius, less than a semicircle. The curve of the intrados in the segmental arch is sometimes composed of arcs of two or three

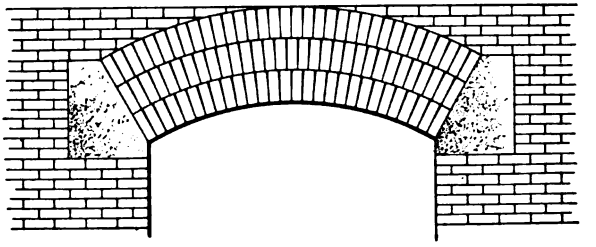

FIG. 52.

different radii, in which case the arch is termed a three- or a five-centered arch. A three-centered segmental arch is shown in Fig. 53, from which illustration it will be seen that

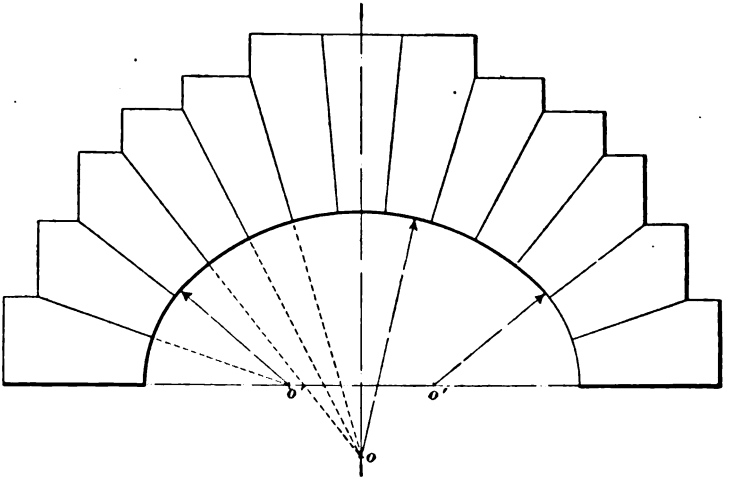


FIG. 53.

the upper part of the arch has a long radius with a center at *o*, while the portions near the springing line have comparatively shorter and equal radii, with centers at *o'* and *o'*.

Digitized by Google

The method of indicating the joint lines between the voussoirs of segmental arches will be understood from the manner in which the dotted lines are drawn across the opening to the respective centers of curvature. This arch is nearly elliptical in form, and is sometimes erroneously termed an elliptical arch.

**83.** The true **elliptical arch,** however, is one in which the curve of the intrados is defined by a semi-ellipse, as shown in Fig. 54. The voussoir joints in this arch are always perpendicular to tangents of the intrados—that is, the direction of any joint line is at right angles to that of the tangent which passes through the intersection of the joint line with the intrados. This will be understood from Fig. 54, in which the foci of the semi-ellipse have been located at *o*

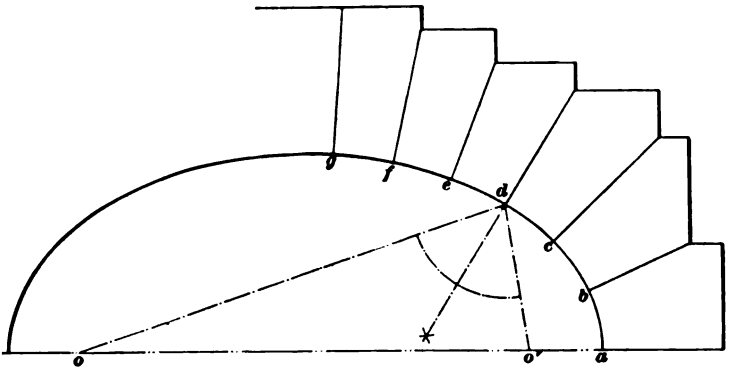


FIG. 54.

and *o'*, by the method described in *Geometrical Drawing.* The number of voussoirs is first decided upon and spaced off on the outline of the ellipse, as indicated by the points *a*, *b*, *c*, *d*, etc., Fig. 54. To determine the direction of any joint line, as at *d*, draw *do* and *do'*, and bisect the angle at *d*. This bisector produced beyond the line of the intrados, as shown in Fig. 54, defines the joint line at *d*, and the joint lines for the remaining points on the intrados are determined in a similar manner.

Digitized by Google

**84.** Another variety of arch is known as the **pointed arch,** Fig. 55. Its intrados is formed by two arcs of equal radii intersecting at the crown. The arch shown in Fig. 55 is also known as an equilateral pointed arch, since the radius of the intrados is equal to the span. This arch is characteristic of a style of architecture known as Gothic. It will

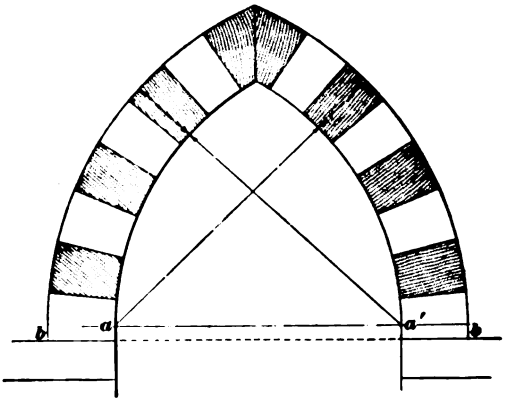


FIG. 55.

be seen from the illustration that the intrados and the extrados are concentric, the centers of both curves being located at *a* and *a'*. Since these centers are located some distance above the springing line *b b*, the arch is sometimes described as a *stilted* arch, and the perpendicular distance between the centers and the springing line is called the *stilt* of the arch.

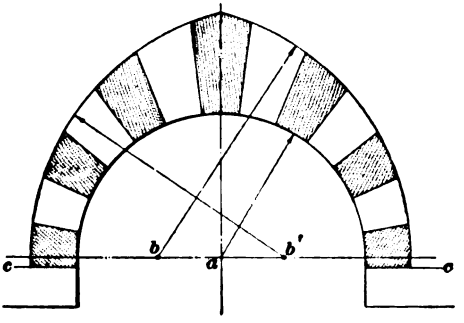


FIG. 56.

**85.** A variety of arch in which the extrados is composed of pointed curves and the intrados is formed by a semicircle is shown in Fig. 56. Such

Digitized by Google

arches are found in Venice and are sometimes termed **Venetian Gothic arches.** The center for the semicircular intrados is at *a*, while the centers for the pointed extrados are at *b* and *b'*.

**86.** What is known as the **horseshoe,** or **Moorish, arch** is represented in Fig. 57. The palace of the Alhambra in Spain, which has already been referred to as an example of Saracenic architecture, has some of the best examples of this

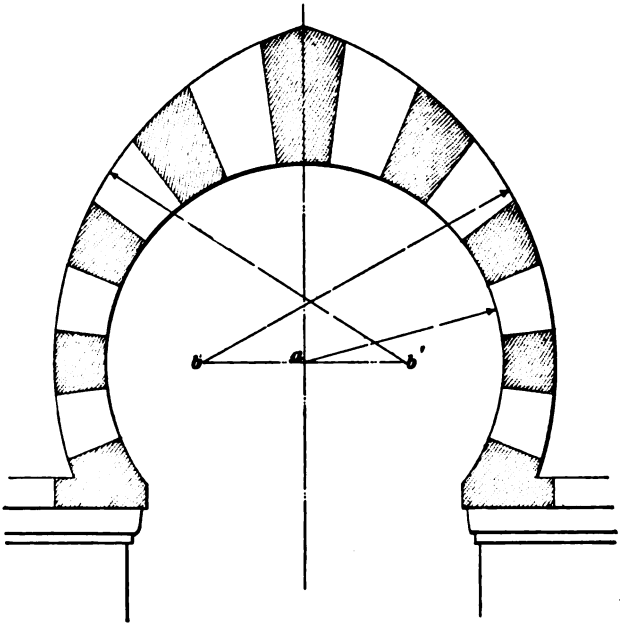


FIG. 57.

arch, many of them being enriched in a very elaborate manner. This arch is sometimes built with the intrados and extrados concentric, but in the arch here shown the center for the intrados is at *a*, while at *b* and *b'* are the centers for the pointed extrados. In all horseshoe arches the center is stilted far above the springing line in order to produce the desired effect.

Digitized by Google

**87.** Arches used in structures whose walls are composed of coursed stonework, or, as it is termed, ashlar work, often have their extrados so formed as to present an appearance of bonding in the voussoirs. This construction, which occasions much extra expense when the work is executed in stone, on account of the labor involved, is usually seen only in large structures.

**88.** The **flat arch,** Fig. 58, is very common in modern architecture. In order that it may be self-supporting, this

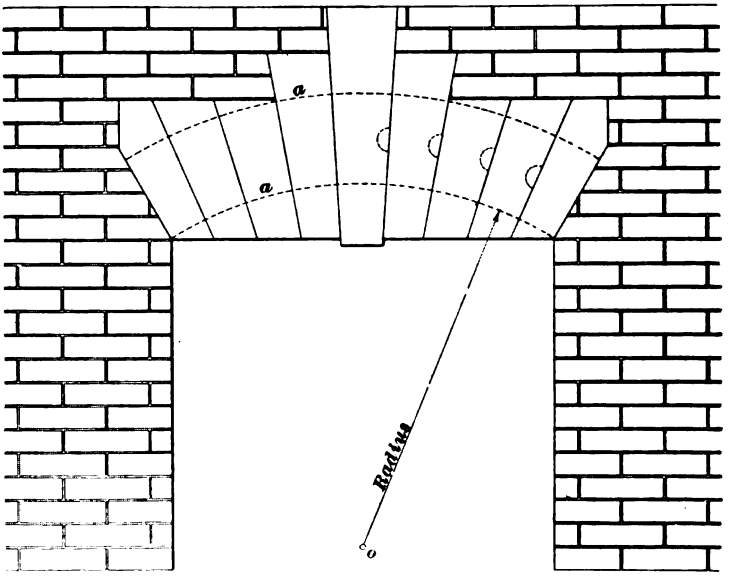


FIG. 58.

arch must be of such size that a segmental arch of proper radius and sufficient depth can be drawn on its face, as indicated by the dotted arcs *a*, *a* in Fig. 58. This arch should have a radius equal to the width of the opening, and is seldom used for openings wider than 5 feet. The keystones of flat arches usually project about one inch below the soffit of the arch, and the joint lines of the voussoirs are always drawn radially from the center *o*.

Digitized by Google

**89.** Arches are often decorated with more or less elaborate moldings, known as label and soffit moldings. These are illustrated in Fig. 59, in which *a* is the label mold and *b* the soffit mold. The profiles of these moldings may be

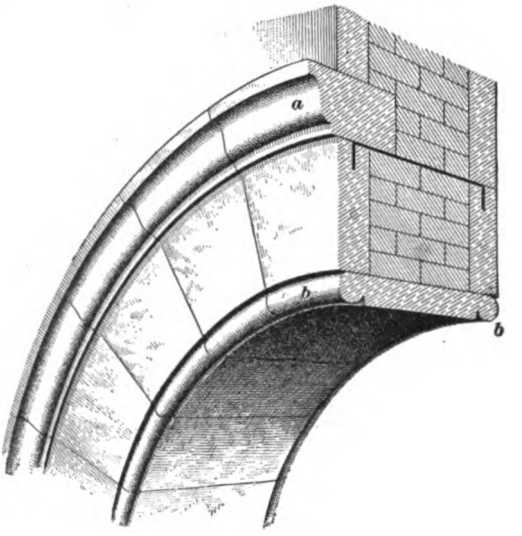


FIG. 59.

varied to suit the fancy of the designer, although the cyma recta with fillets, as shown in Fig. 59, is frequently used for the label mold, while the bead molding shown at *b* is commonly employed for the soffit mold.

---

## WINDOW TRACERY.

**90.** Brief mention has been made of the value of window tracery in the earlier examples of architecture, as affording a means for determining the date at which the structure was erected. Without entering into this part of the subject, which more properly belongs to the province of the architectural student, we will now consider a few constructive features of the tracery, together with the elements

Digitized by Google

of its composition. Since the materials commonly used for constructions of this nature at the present time are those worked by the stonecutter, the carpenter, and the architectural sheet-metal worker, these artisans are frequently required to produce full-sized detail drawings for such work. Designs for window tracery consist of more or less elaborate geometrical constructions in which the circle, square, and triangle, together with their subdivisions, are used as a basis. The pentagon, hexagon, octagon, and other polygonal forms are also used extensively in the more complicated designs.

**91.** The designs for window tracery depend, to a certain extent, on the formation of the arch and also on the number of divisions into which the opening of the window or doorway is divided. The principal openings for the admission of light in a window are called **days.** When a window has but one of these openings and is covered with an arch whose intrados is described with a radius equal to the width of the opening—that is, an equilateral arch—it may be said to be in its simplest form, and is seldom relieved with tracery. In the more elaborate constructions, however, windows are divided into two or three days and these often are subdivided in a similar manner, forming multiples. The upright bars that separate the days of a window are called **mullions.** The projecting edges of these mullions are frequently decorated with moldings, the profiles of which

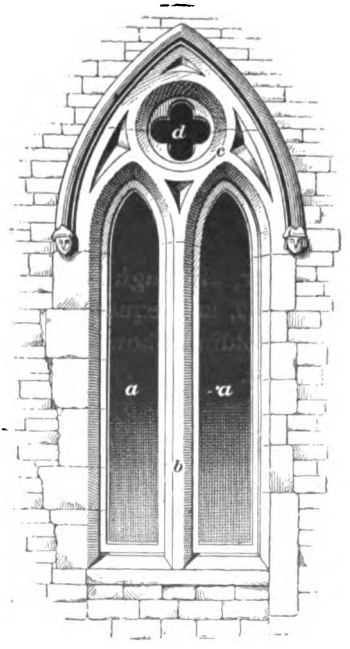


FIG. 60.

Digitized by Google

are used also for the solid portions of the tracery. The ornamental portion of the window in which the tracery is displayed is called the *head* of the window.

**92.** Fig. 60 illustrates a comparatively simple form of window tracery—a window of two single days. In this illustration *a*, *a* are the days, *b* is the mullion, and *c* is the window head, ornamented in this instance with a four-lobed figure *d* known as the *quarterfoil*.

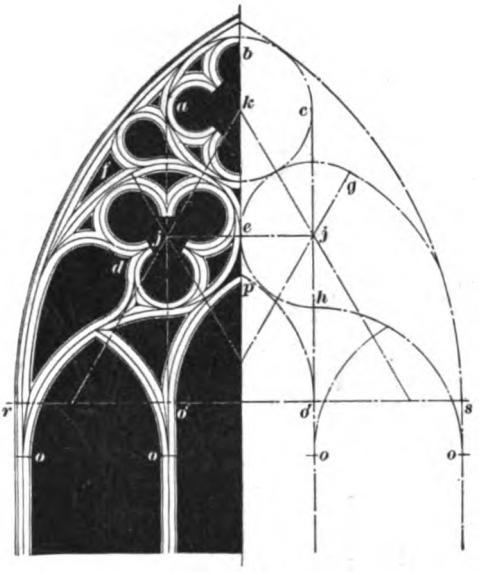


FIG. 61.

An example of a window with three days is shown in Fig. 61. Here the tracery is somewhat more elaborate and is formed principally by three circles *abc*, *def*, and *egh*, each of which contains a trefoil *j* or a quarterfoil *k*. The geometrical construction will be understood from the dotted lines in the right-hand portion of the figure. The centers from which the side arches are described are indicated by the points *o*, *o*, while *o'* is the center for the arcs composing the central arch whose apex is at *p*. The intrados for the main arch is described with arcs whose centers are at *r* and *s*. The positions of the remaining centers may be determined by means of the dotted construction lines.

A window composed of two principal days, each subdivided into three minor days, is shown in Fig. 62. The design in this instance is far more complicated and exhibits



Digitized by Google

greater skill in the geometrical construction. The principal figure of the tracery is seen to be the large circle whose center is at *o* and whose diameter is equal to one-half the width of the window. The circumference of this circle is

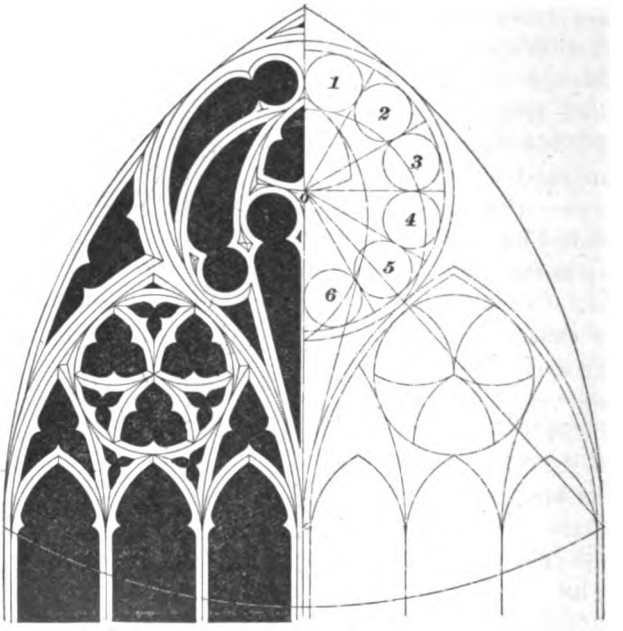


FIG. 62.

divided into twelve parts, and smaller circles, *1*, *2*, *3*, *4*, *5*, etc., tangent to one another and to the circumference of the great circle on its interior, are described as shown in Fig. 62.

**93.** Another window of six days whose formation differs from that shown in Fig. 62 in the respect that its principal days are three in number, is shown in Fig. 63. Each of the three principal days is here divided into two minor days, and the circle that forms the basis for the tracery is divided even more intricately than in the window

Digitized by Google

just described. The geometrical problems given in the earlier portion of this Course will be the means of suggesting many constructions that may be applied to the formation of tracery, and will serve as a test of the student's ingenuity. Besides being used for the purposes for which they were originally designed, traceries are not infrequently employed in decorative panels. They are favorite constructions with the church architect, and are seen in interior as well as exterior work.

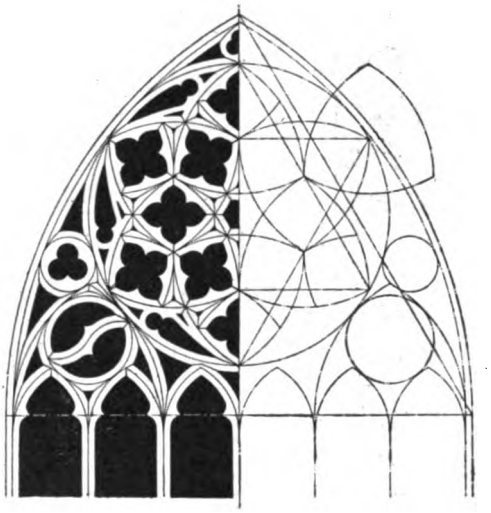

FIG. 68.

## NAME AND DATE PANELS.

**94.** Although used very frequently in modern construction, these are not, strictly speaking, separate architectural forms. The features of principal importance in such panels are to be found in the formation of the letters and figures used, and it is to assist the student in their construction that the subject of panels is here introduced. The custom of placing, in some prominent position on a structure, the date of its erection or some inscription relative to the character of the building is of very remote origin. Such inscription, or lettering, was commonly placed in the frieze of the entablature or in the background of a pediment, and this practice is still followed for buildings whose elements of design are modeled on classic lines. The requirements

Digitized by Google

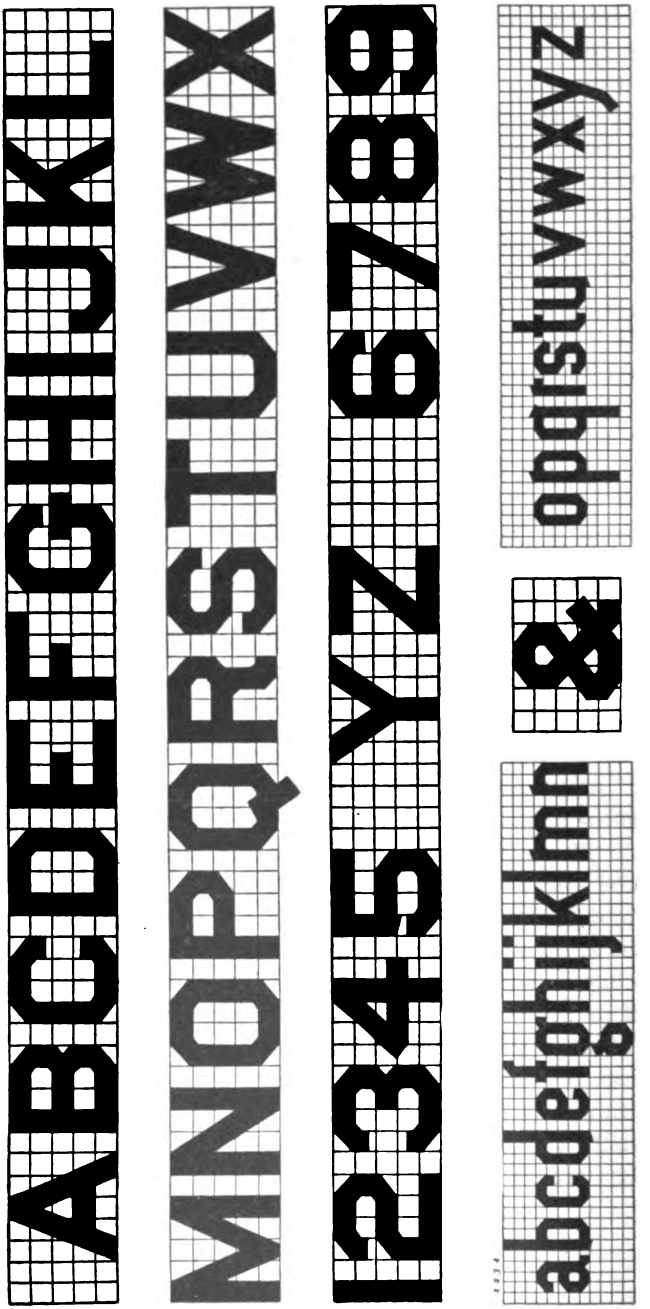


FIG. 64.

Digitized by Google

of the modern commercial world, however, demand that inscriptions placed on buildings intended for business use shall be as conspicuous as possible, and in order to render the lettering more prominent, the ingenuity of the architect is called on to devise ways and means for accomplishing this result without detracting from the appearance of the building. This is a difficult task at best, since the use of a building for advertising purposes was surely not contemplated by the originators of the classic orders. The ugliness of the modern sign, however, may often be relieved by suitable moldings properly disposed as panels, but first consideration should invariably be given to the formation of the letters and figures used. Perhaps nothing detracts so much from the appearance of a well-proportioned building whose graceful moldings have been carefully planned as the introduction of ill-shaped lettering. In order that the student may form some idea of the correct construction of letters and figures, two representative alphabets are illustrated on the accompanying pages.

**95.** The first of these, shown in Fig. 64, is known as the block-letter style of alphabet, and has long been a favorite with architectural workers owing to the sharp effect of the letters when exposed in a panel and the ease with which its lines may be reproduced. These letters may be copied in any desired size, if attention is paid to the background or network of crossed lines on which the letters are shown.

FIG 65.

Suppose, for example, that a panel containing the words "Colliery Engineer Co." is desired, and that the letters must be 15 inches in height. It is necessary only to lay off on the drawing board a vertical line 15 inches in length, and to divide this line into five equal spaces corresponding to the number of smaller squares contained in the

Digitized by Google

height of the letters in Fig. 64. Through each of the points located on the vertical line, horizontals of indefinite length are drawn, and later other verticals, in order that the network of lines may be as represented in Fig. 64. Beginning with the C and filling the squares in the manner indicated in the illustration, the student will find that the reproduction of the letters in Fig. 65 thus becomes merely a mechanical matter, while the appearance of the letters is as satisfactory as if the services of a skilled sign writer had been employed.

**96.** Oblique letters may be made by a simple modification of the foregoing process. Having decided on the amount of inclination, the network may be constructed as shown in Fig. 66, and the letters copied, as in the former

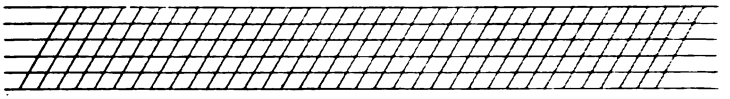

FIG. 66.

case. In this instance, however, only the outer outlines of the letters should be drawn coincident with the lines of the network, for the width of the strokes of the letters—that is, the heavy lines that form the letters—should be uniform

FIG. 67.

throughout. This will be better understood from the drawing in Fig. 67, which shows the grouping of letters of Fig. 65 slanted for the purpose of exemplification.

**97.** Another popular style of letter, known as the French Roman, is shown in Fig. 68, and from the instruction already given the student will be enabled to reproduce or enlarge any desired combination of either style.

Digitized by Google

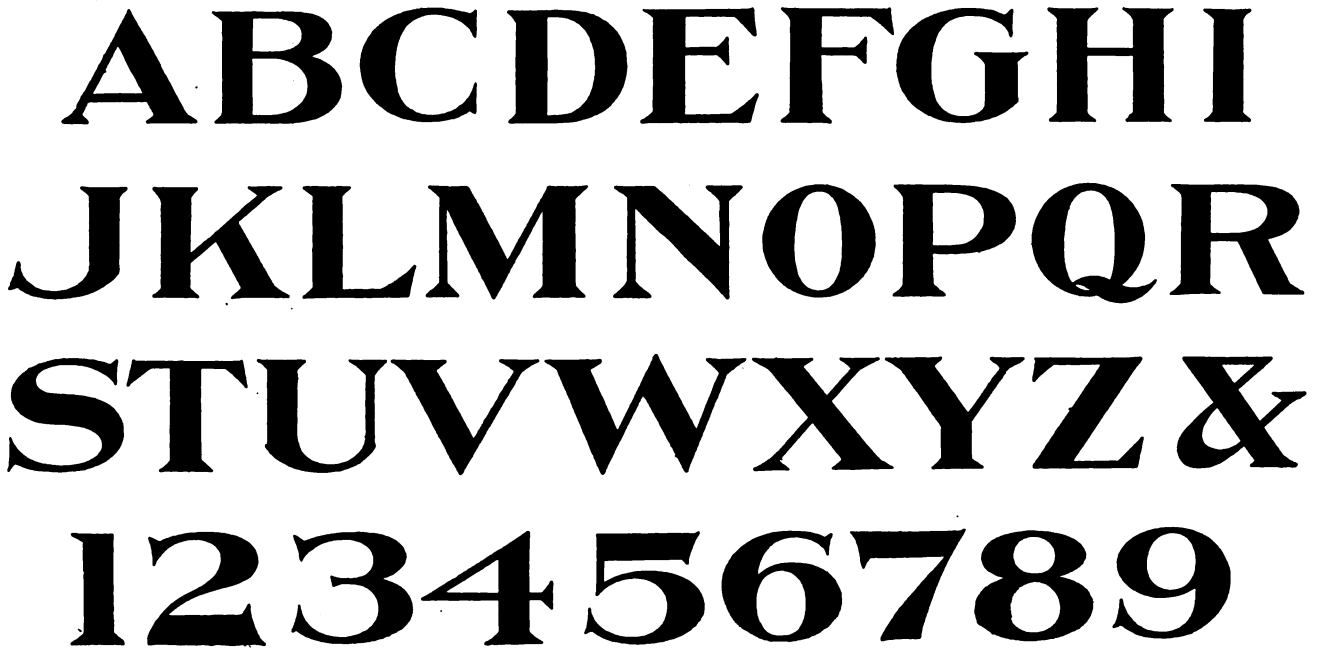


FIG. 68.

Digitized by Google

## APPLICATION OF PRINCIPLES.

**98.** The proportions given in the illustrations of the five orders of architecture are usually maintained by modern architects, and in order that the student may apply the proportions of detail in his daily work, it may be well to give a few examples of their application. To reproduce a cornice of any particular style of architecture, it is necessary to know only the extreme height of the proposed building. The length of a module is then ascertained by dividing the height into as many parts as there are modules in the best examples of the order it is desired to copy. A scale of modules and parts may then be constructed as already described, and the dimension figures given in the illustrations of the several orders may be used directly for the detail drawing. Of course, some deviation from the established proportions may be made at the discretion of the designer, but, in general, one who is unskilled in the art of architecture should follow very closely the dimensions given.

**99.** It will be remembered that in Fig. 1 was shown a building with an ill-proportioned cornice. It will be of interest to the student to show how, by the application of the foregoing principles of architectural proportion, the appearance of this building could have been greatly improved. Suppose it had been desired to complete this building with a cornice of the Roman Ionic order, and that the height of the building, from the top of the water-table to the top of the fourth-story windows, is 56 feet. Referring to Fig. 29, the illustration of the Roman Ionic order, we find the dimensions of the stylobate and column to be 24 modules. Therefore, 56 feet, the height of the building, is the height of 24 modules, and 1 module equals $56 \div 24 = 2\frac{1}{3}$, or 2 feet 4 inches. A scale of modules and parts, in which the module is represented 2 feet 4 inches long, may now be laid off as shown in Fig. 10. One of the modules in the scale thus made may conveniently be divided into 30 equal parts for the

Digitized by Google

smaller units. In the illustration of the Roman Ionic order, Fig. 29, the entire height of the entablature is given as 4 modules and 15 parts, or 10 feet 6 inches, which is the required height of cornice for the building. The detail for the construction may be made by aid of the illustration in Fig. 29, and it will be seen that the building, when erected as shown in Fig. 69, presents a graceful and well-proportioned appearance. In this cornice, however, modillions are used in place of the dentil course shown in Fig. 29.

FIG. 69

When cornices for brick structures are made of sheet metal, they not uncommonly begin with the moldings in the upper part of the architrave, and the several wide fascias, or members below the molding, are carried out in the building in brickwork.

**100.** If the style of architecture in any building requires capitals or pilasters, their proportions may be ascertained

Digitized by Google

by a process similar to that just described. Again, if the first story of a building—a business block for example—contains a store, and it is desired to finish the exterior of the first story by columns and a lintel cornice, the process differs in no way from the preceding. Of course, the entire height of the first story only is considered when the proportions are laid out. The same is true also of proportions of a porch supported by columns finished with an entablature.

Interior decorations, such as ceiling cornices, window casings, door trim, etc., may advantageously be proportioned in the manner referred to in the preceding illustrations.

---

## DRAWING PLATE, TITLE: DESIGN FOR SHEET-METAL BAY WINDOW.

**101.** A further practical example of the application of architectural proportion to a trade problem is furnished in the accompanying drawing plate entitled "Design for Sheet-Metal Bay Window." The student is required to make, in accordance with the following suggestions, a drawing of the plate on paper the same size as that used for the plates of preceding sections, and send it for correction in the usual manner.

The drawing to be made consists of the details, drawn to ¾-inch scale, of one of the bay windows shown perspectively in Fig. 70. An enlarged perspective view, where details of the design are more clearly shown, is given in Fig. 71. The view (Fig. 70) represents the brick wall in the second story corbeled out into a series of piers; the space between the piers measures 10 feet in the clear, and is capped by a segmental arch whose radius will be found during the construction of the drawing. Between each pier is placed a bay window whose projection, on the sheathing line, from the face of the wall is 2 feet. The dimensions of the wooden construction may be taken by scale measurements from the reduced plate. By aid of these dimensions,

Digitized by Google

Digitized by Google

# DESIGN FOR SHEET-METAL BAY WINDOW.

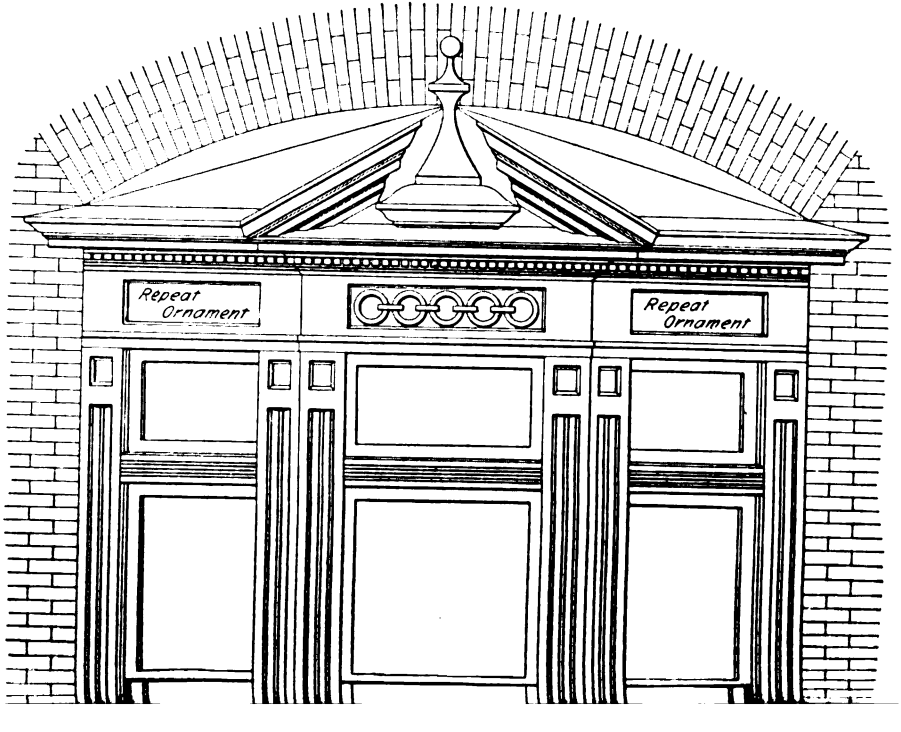


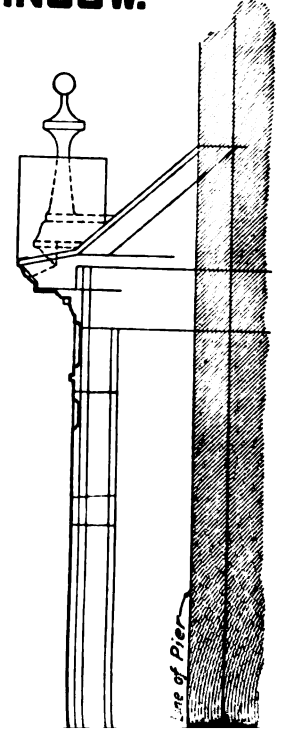


Digitized by Google

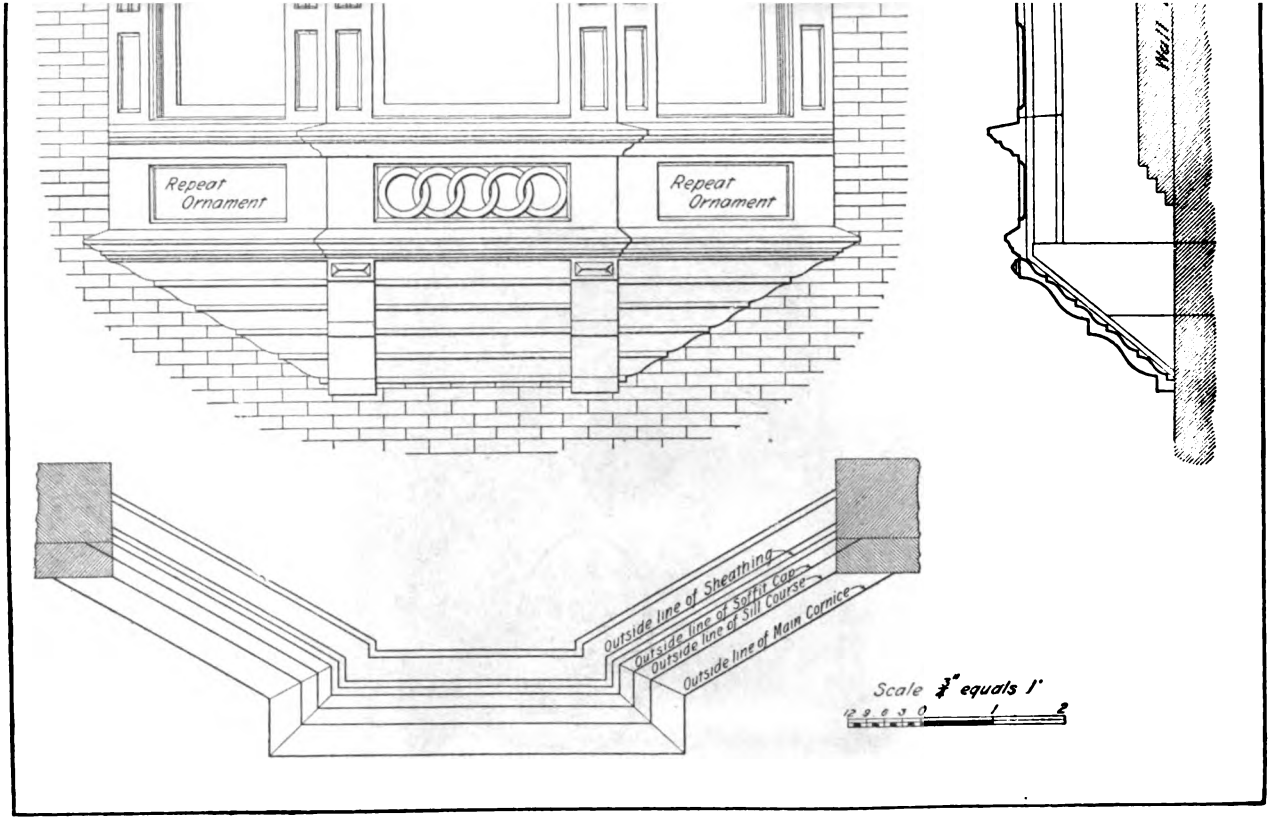


Digitized by Google

Digitized by Google

the sectional plan, front elevation, and sectional side view may be constructed. The cornice moldings may be constructed like the Roman Doric, and the broken pediment over the middle window of the bay is to be drawn at an angle of 30° to the horizontal. The curve for the arch is described through the point at the vertex of the triangle of the pediment produced, and points on the piers 1 foot 8 inches

FIG. 70.

below the vertex point. The profiles for the return molds in the upper portion of the broken pediment are to be obtained in the manner described in Art. **75**, and the finial in the pediment may be drawn by freehand methods in accordance with the drawings on the reduced plate. A dentil mold with dentils is to be represented as shown, and the ornament in the frieze of the cornice may be reproduced

Digitized by Google

from the plate in about the same proportions as there shown. The pilasters between the window openings are to be paneled as represented. Show the base mold of the window with ornament in the frieze and cap mold for soffit, as on the plate. The finish of these moldings against the brickwork and of the main cornice may be ascertained from

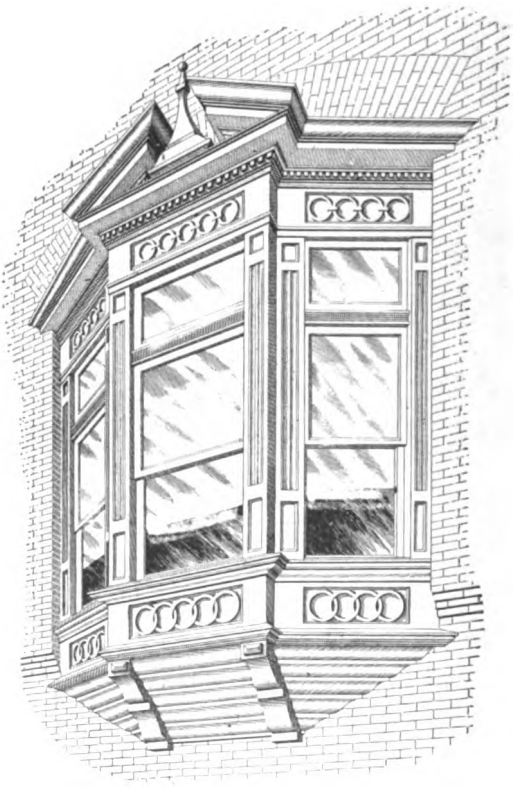

FIG. 71.

the plan and projected in accordance therewith to the elevation.

A peculiar formation of soffit shown in the projection drawings consists of a series of flat cyma rectas mitered against blocks directly under the window pilasters. The

Digitized by Google

face of each block is made up of cyma rectas somewhat larger than those in the soffit itself. The drawings on the reduced plate are exactly $\frac{3}{8}$ inch to the foot, and the plate made by the student, therefore, will be twice this size. The bricks in the arch and in the piers on either side of the bays may be indicated as shown by lines drawn $2\frac{1}{2}$ inches apart in accordance with the $\frac{3}{4}$-inch scale.

Digitized by Google

Digitized by Google

# DEVELOPMENT OF MOLDINGS.

## INTRODUCTION.

**1. General Principles.**—The development of patterns for sheet-metal moldings is accomplished by processes substantially the same as those with which the student is already familiar. It is a fact, however, that, although no principles of construction are used that have not already been explained in *Practical Projection* and *Development of Surfaces*, the pattern draftsman is continually encountering new situations that demand the exercise of his best inventive faculties. It is not until he has learned to apply his power of imagination to the particular case in hand and can succeed in picturing to himself—in his "mind's eye," so to speak—a model of what the completed object will be like, that he can be said to have mastered satisfactorily the subject of patterncutting. Only in this way will he become expert in the representation of objects—the fundamental principle involved in the development of patterns.

We have already seen that the operations on the drawing board are purely mechanical and that their principles are readily mastered. The drawing-board operations are, for the work contemplated in this section, precisely similar to those heretofore explained, and the student that has completed the plates thus far required in the Course has acquired sufficient practice for the particular field we are now entering.



For notice of the copyright, see page immediately following the title page.

Digitized by Google

With comparatively few exceptions, the patterns of the cornice maker are developed by the most simple of the three processes described in *Development of Surfaces*, viz., the parallel method. The difficulties, then—if any may be said to be encountered in the delineation of cornice, or sheet-metal molding, patterns—lie wholly in that part of the work devoted to the representation of the object itself. This fact becomes apparent when we remember that parallel developments are readily produced after the view showing the parallel lines of any solid in their true lengths has been drawn, provided that the cutting plane—or the miter line, as we have later termed that plane when shown on edge—has been correctly represented and projected to the view in which the parallel lines of the solid are shown. Such patterns as require the use of the radial method of development are of the most elementary kind, and, as will be shown later, offer no difficulties to the student that has mastered the solutions of the preceding sections.

**2. Why Straight Moldings Are Classed as Parallel Forms.**—One of the first solids to which the student's attention was directed when the subject of parallel forms was discussed was the regular cylinder, Fig. 1 (*a*). The parallel lines of this solid were necessarily assumed lines, for the reason that the evenly curved surface of the solid itself presented no edges from which projectors might be drawn. An edge view of the solid was therefore necessary in order that such points as were required might be correctly located.

When, in one of the problems in a preceding section, only a portion of the surface of the cylinder was needed for the half-round gutter shown in Fig. 1 (*b*), the student had little difficulty in comprehending that the conditions just mentioned required but slight modification, since only one-half of the surface of the cylinder was needed for the pattern. If a portion of the curved surface of the piece of straight gutter shown in Fig. 1 (*b*) is bent in an opposite direction, a form like that shown in Fig. 1 (*c*) will result. The parallel

Digitized by Google

lines of the curved surface would, however, be represented in two views precisely like those needed for an orthographic representation of the cylinder—that is, in a right plan and an elevation. The methods used to develop such a surface, therefore, are the same as those used to develop the surface of a cylinder. Suppose, now, that we omit the beaded edge from the piece shown in Fig. 1 (*c*) and compare the remaining

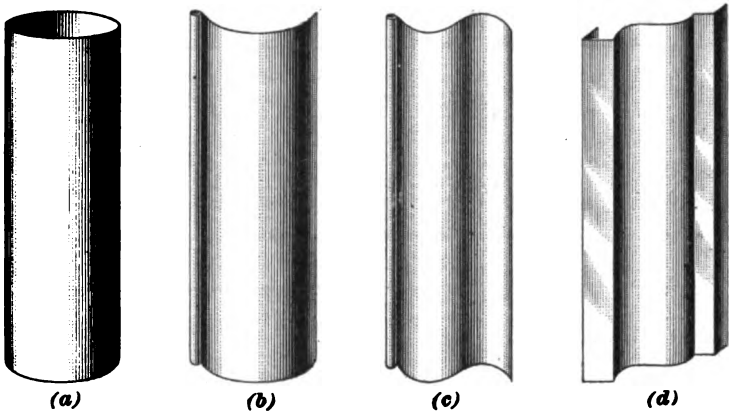


FIG. 1.

surface with the ogee portion, or cyma, of the molding in Fig. 1 (*d*). We shall then have little difficulty in understanding that the same processes by which the surface of the cylinder was developed will suffice for the development of the surface of the molding. It will be seen, also, if we add other surfaces to the ogee for the purpose of including other members in the pattern, that the same processes of development may be applied to all.

**3. Relation of Views.**—When the representation of moldings is undertaken, however, an important matter to be taken into consideration is that the true profile of the molding must be represented correctly and the relative amount of projection between its members carefully maintained in the several views. The word "projection" is here used in a



Digitized by Google

sense entirely different from that heretofore given in this Course.

The "projection" of a molding may be defined as the overhang, or protuberance, beyond a certain line or point from which measurements are made. This will be better understood from the drawing in Fig. 2, in which the two views—that is, the edge view and the view in which the

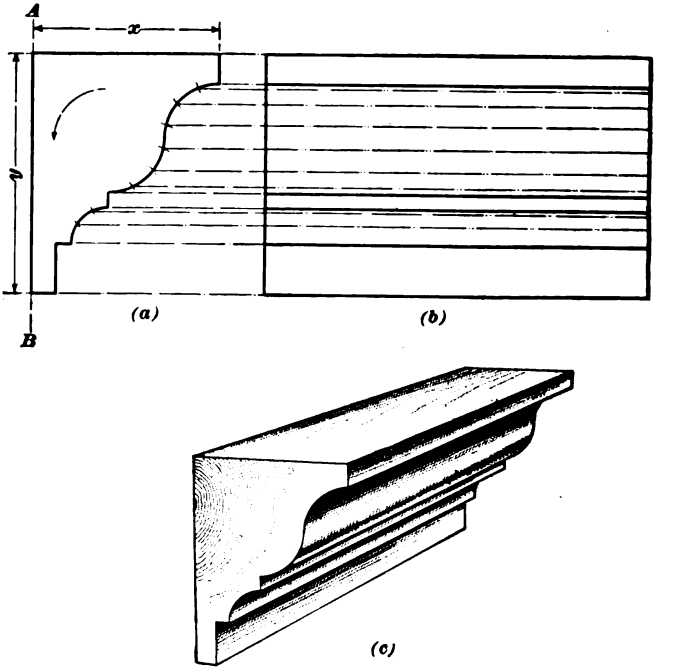


FIG. 2.

parallel lines are shown in their true lengths—are represented, respectively, at (*a*) and (*b*). The view at (*a*) may be considered as a plan and the view at (*b*) as either a front or a side elevation at right angles to the plan.

The molding in Fig. 2 is in an erect position with reference to the line *A B*, which we will call the wall line, since it may represent the face of the wall to which the molding

Digitized by Google

is to be attached. The dimension $x$ is called the projection of the molding. If $x$ were 8 inches, we might say, "The molding projects 8 inches," or, "The molding has a projection of 8 inches." The dimension $y$ is, of course, the vertical height of the molding, for in the right view at (*b*) it measures the perpendicular distance between the outer parallel lines of the molding. In any view in which this molding is to be represented, the dimensions $x$ and $y$ must be taken into consideration as thoughtfully as if an actual solid were to be handled by a workman. In fact, the student will arrive at a better understanding of the properties of moldings if, in this elementary explanation of the subject, we consider the object represented in Fig. 2 as a solid block of wood or other material molded on its face in accordance with the profile view at (*a*). As shown in the view at (*b*), therefore, the edges of the solid are represented on the drawing by full lines, and if assumed edge lines are desired, they must first be located in the usual manner as points on the view at (*a*), where the surfaces of the molding are shown on edge. A perspective view of the molded wooden block is shown at (*c*) to give the student a better understanding of the subject.

The student will understand that a development for the surface of the solid represented in Fig. 2 would be obtained by a process precisely similar to that used in the case of the cylinder. The form of the cylinder, however, is such that it may be turned on its axis without materially affecting its development, while a change of position of the comparatively irregular solid represented in the view at (*a*), Fig. 2, produces material alterations in the corresponding view at (*b*). Thus, if the solid in Fig. 2 were to be turned one-quarter way around, as indicated by the dotted arrow in the illustration, it would then be necessary to represent its position as in Fig. 3 (*a*); and, as may be seen on the right, the view at (*b*) would be entirely different from that shown in Fig. 2, although the same solid is represented in both illustrations. While such changes of position are not of great importance when a development is desired for pieces of

Digitized by Google

molding with squarely cut ends, they become important factors when, as is usually the case, miter patterns are to be laid out.

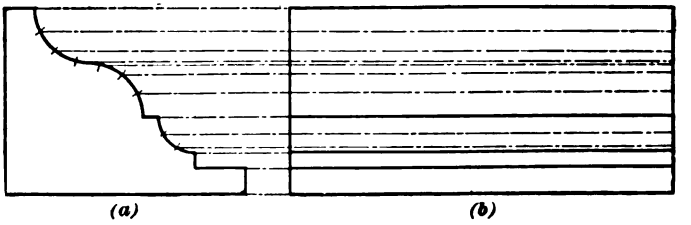


FIG. 3.

**4. Distinction Between Return Miters and Face Miters.**—For the purpose of making plain the distinction between what is known as a *return miter* and a *face miter*, it

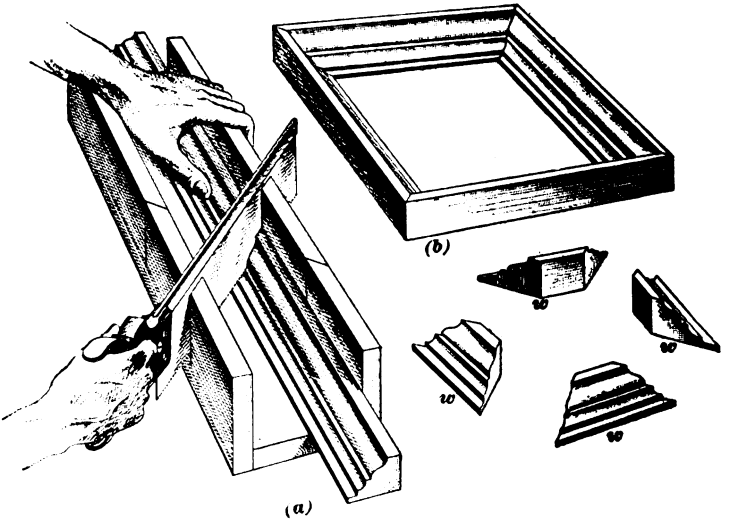


FIG. 4.

may be assumed that a number of pieces of wooden molding strips whose profile is like that of the drawings in Fig. 2 (*a*) and Fig. 3 (*a*) are cut in a carpenter's miter box to equal

Digitized by Google

lengths and on a miter line at an angle of 45°. Four pieces are cut from a strip lying in the position shown in Fig. 4 (*a*), and four others from a strip in the position shown in Fig. 5 (*a*). It should be noted that in order to secure the right "cut" at both ends of the four pieces of molding, an extra sawing must be made down through the other slot in the miter box. This extra saw cut results in some waste pieces, marked *w* in the illustration, which must not be lost sight of, for they will presently be used to demonstrate an important fact in miter cutting.

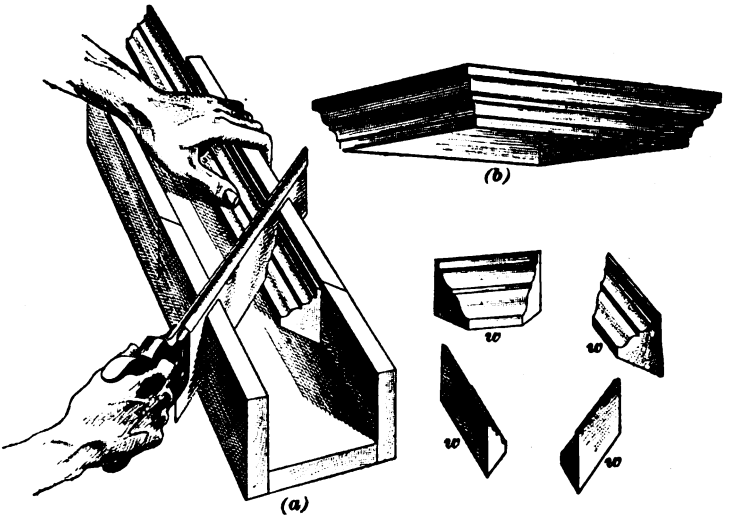


FIG. 5.

Two frames are now made from the longer pieces in Figs. 4 and 5. These frames are shown in the respective illustrations at (*b*). The first of these, Fig. 4 (*b*), illustrates what is termed a face miter, such as is to be seen in the miters of picture frames. The cornice maker frequently employs such miters in panel construction, and from this circumstance is derived the term *panel* miter, which is often applied by trade workers to face miters of every description. Miters of this sort are also required at the extremities of

Digitized by Google

inclined moldings, and in numerous other situations to which the student's attention will be directed later.

The second frame is shown completed in Fig. 5 (*b*); here the profile of the molding is in the position occupied by the profile of a belt molding or of a cornice. This form of miter, as already explained, is known as a return miter, and is, perhaps, the one most frequently used in constructions likely to be encountered by the student. The student should carefully note the fact that the difference in appearance of the two frames shown in Figs. 4 and 5 is due solely to the different positions in which the molding is held in the miter box while receiving the saw cuts.

**5. Distinction Between Inside and Outside Miters.**— It will be seen that the waste pieces *w* in Figs. 4 and 5 may also be mitered so as to form frames, as shown at (*a*) and (*b*), Fig. 6. This important difference is to be noted, however: the positions of the profiles of these two frames are reversed as compared with the frames in the drawings at (*b*), Figs. 4 and 5. In other words, if the miters in the frames first made are considered as outside miters, these may be referred

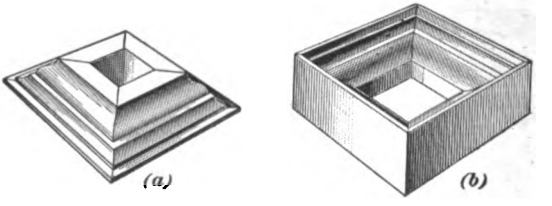


FIG. 6.

to as inside, or reentrant, miters. It is evident, of course, that the profile of the molding has undergone no change during the process of sawing in the miter box. It is true, moreover, that the waste pieces *w* were obtained by the same saw cuts used to obtain the longer pieces of the frame first constructed. It will be seen from Fig. 6 that the pieces *w* fit together accurately and form miters at precisely the same angles as those previously examined.

Digitized by Google

The distinction between outside miters and inside miters may be illustrated somewhat more forcibly if an arrangement of the several pieces is made in accordance with the several views at (*a*) and (*b*), Fig. 7. The pieces in the drawing at (*a*) are taken from the frames shown in Fig. 4 (*b*) and Fig. 6 (*a*), while those in the view at (*b*), Fig. 7, are taken from the frames shown in Fig. 5 (*b*) and Fig. 6 (*b*). Fig. 8 (*a*) and (*b*) shows the pieces used for the several frames again replaced in their original positions—that is, in the positions they occupied before the molding was cut in the miter box. In Fig. 8, the pieces marked *1* are those used for the frame in Fig. 4 (*b*);

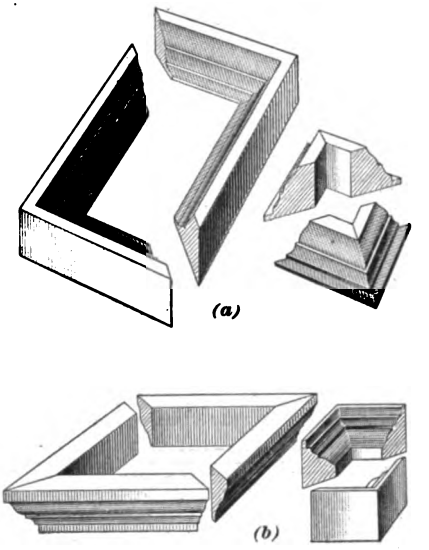


FIG. 7.

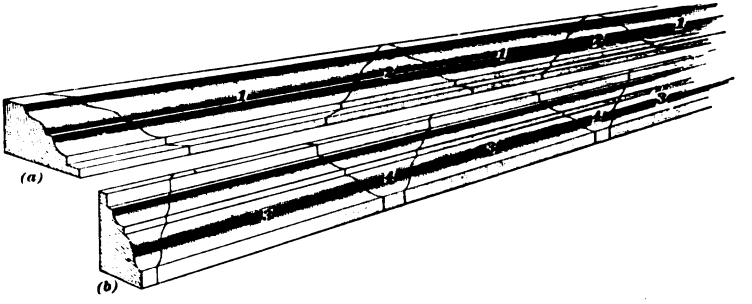


FIG. 8.

those marked *2* are from the frame in Fig. 6 (*a*); those marked *3* are from the frame at Fig. 5 (*b*); and those marked *4* are from Fig. 6 (*b*).

Digitized by Google

It will be seen from Fig. 8 that two pieces are produced by a single miter cut—one suitable for an outside and the other for an inside miter. This has been proved in the case of a square miter, but it is important to know that it is also true of a regular miter at any angle.

**6. Development of Patterns.**—In accordance with instructions previously given for obtaining parallel developments, let a plan and an elevation of certain portions of the frame shown in Fig. 4 (*b*) be drawn as represented in Fig. 9. In this illustration, the plan represents the profile view of the molding, while the true lengths of the edge lines, together with the edge view of the cutting plane, that is, the miter line, are represented in the elevation. The stretchout of the molding, or as much of its surface as is included between *A* and *B*, Fig. 9, is laid out in accordance with the positions of the points on the profile view. The method of completing the patterns

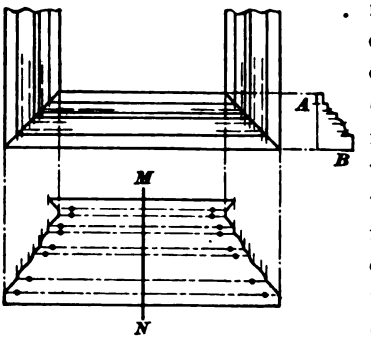

FIG. 9.

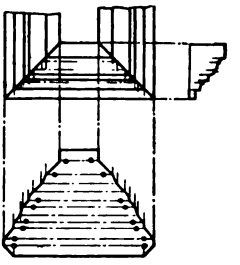
FIG. 10.

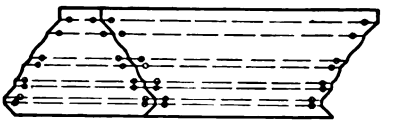
FIG. 11.

by drawing developers has already been given in problems in *Development of Surfaces*, and, therefore, the explanation need not be repeated here. The pattern developed will be referred to later for the purpose of explaining more

Digitized by Google

definitely the intimate connection between inside and outside miters.

Now, let a drawing for the development of the frame in Fig. 6 (*a*) be constructed in the same manner as the development of the frame in Fig. 9. The resulting pattern, which is shown in Fig. 10, differs materially from that shown in Fig. 9. On placing them side by side, however, as in Fig. 11, and comparing the two patterns, it will be seen that adjacent center lines exactly coincide; had the draftsman so desired, the patterns for both frames might have been obtained from the same operation. In other words, if the drawing had been constructed as shown in Fig. 12, one of the outlines could have been used for the outside miter, and the other—the one indicated by light cross-hatching in the illustration—could have been used for the inside miter. A knowledge of this important fact is of material advantage to the draftsman, who is thereby permitted to avoid an additional operation when patterns for both inside and outside miters are required in any particular construction.

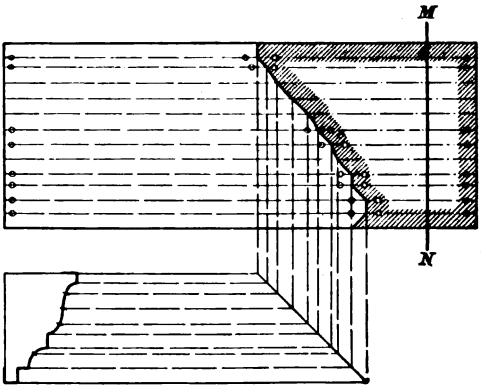


FIG. 12.

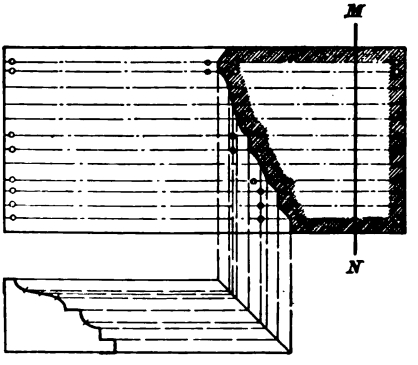


FIG. 13.

It is apparent, from an inspection of Fig. 13, that the

Digitized by Google

same is true of the profile when turned in a different direction. A development is here given for two frames whose profiles are in a position opposite to that shown in Fig. 12. The resulting patterns are, of course, placed side by side in the development, and the student should have no difficulty in understanding that the principle illustrated in Fig. 11—that is, that the same miter line may be used for the development of both inside and outside miters—is applicable to moldings in any required position.

**7. Finding the Position of the Miter Line.**—This feature of the drawing has been sufficiently explained in former problems, and is referred to here only for the purpose of reminding the student that the regular miter lines for moldings intersecting at any angle are found by bisecting the given angle and using the bisector itself as the miter line. It is sometimes convenient to represent the angle on the drawing and bisect it in accordance with well-known methods already explained. If the angles are expressed in degrees, it may be more convenient to use the protractor and set off half the given angle on the drawing board in the required position. Thus, for an angle of 90°, or a right angle, we may set off the miter line at an angle of one-half of 90°, or 45°, with the parallel lines of the molding. Again, for the sides of an octagonal finial, which we know are at an angle of 135°, we may at once set off an angle of one-half of 135°, or $67\frac{1}{2}$°, with the outlines of the molding, always remembering that the miter line must appear in the view in which the parallel lines of the molding are shown in their true lengths.

**8. Developments Requiring a Change of Profile.**—We may use the wooden molding strips to illustrate another important condition that pertains to certain molding developments. This condition involves changes in the profile of any given molding when it is required to produce a miter from an arbitrarily drawn miter line. Let us consider, briefly, the piece of molding used for the frame shown in Fig. 4 (*b*). This piece of molding, as we have already seen, was cut across its ends at an angle of 45° for the purpose of

Digitized by Google

using it in the formation of a right-angled miter—that is, a miter of 90°. Its miter line is already fixed by the saw cut, and it is true that a molding of no other profile can be used to form with this piece an angle of 90°. The piece required for the other side of the angle must be not only of the same profile as this molding, but must have its end cut at a similar angle, although reversed, as we have already seen.

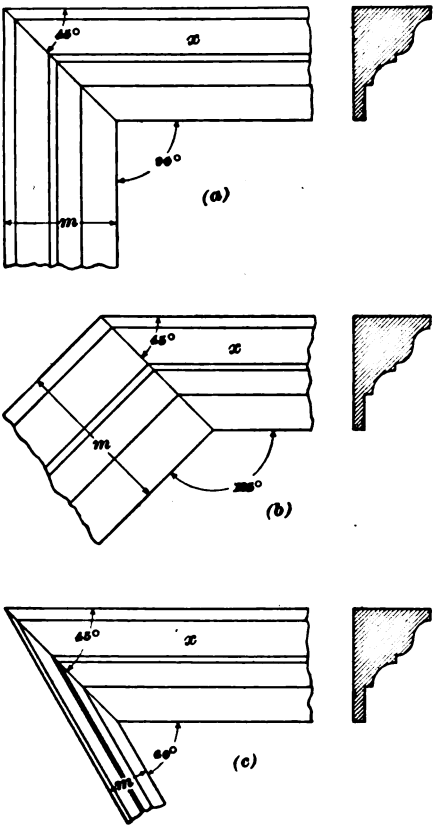


FIG. 14.

It is a fact, however, that an indefinite number of other moldings may be mitered with this piece to form angles other than 90°, provided only that their profiles are molded in accordance with certain established rules of projection. Just what is meant by this statement will appear if the student examines the views at (*a*), (*b*), and (*c*), Fig. 14. Here a piece of molding, on one end of which a 45° miter has been cut, is shown in a projection drawing as the piece *x* in each of the three views. At (*a*) this molding is mitered with another piece to form an angle of 90° in accordance with the original intention when the molding *x* was cut. The dimension *m*, therefore, must correspond with the width of the molding *x*, and may be verified with

Digitized by Google

the dividers if desired. In the views at (*b*) and (*c*), however, the pieces mitered to the molding *x* are at angles other than 90°, and as a result of this change, the dimension *m*

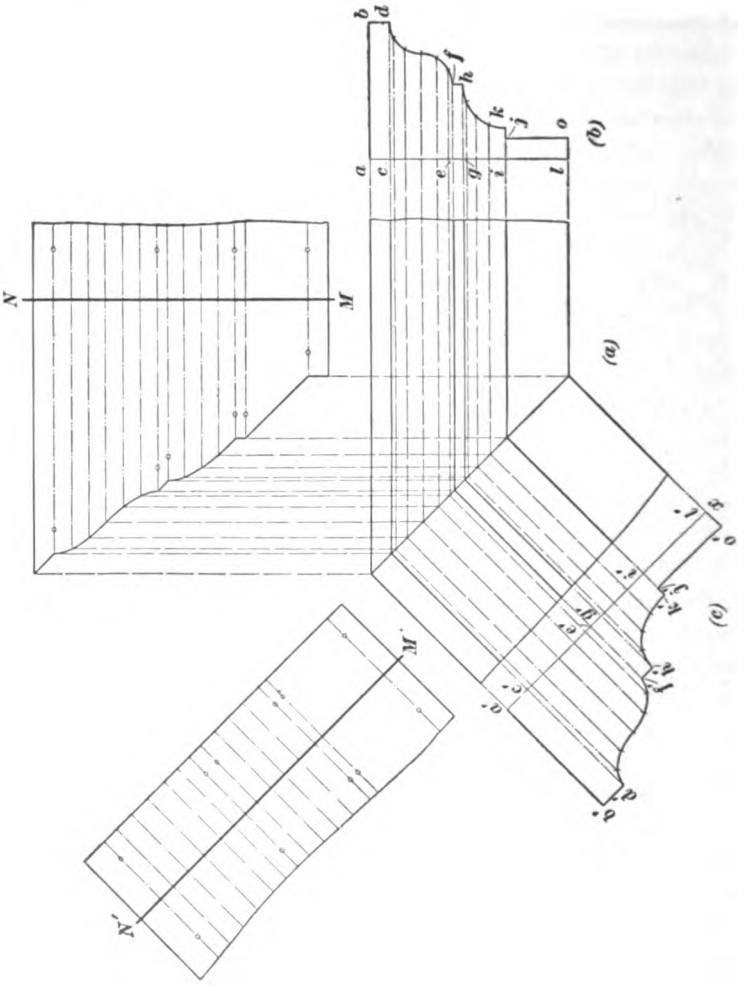


FIG. 15.

has been increased in (*b*), while in (*c*) the dimension *m* is less than the corresponding dimension in the view at (*a*). Since at (*b*) the outer lines of the molding mitered to the

Digitized by Google

piece $x$ are farther apart and those at ($c$) are closer together than the outer lines of the mitered pieces at ($a$), it will be seen that a corresponding change has taken place between the other lines of the molding. These other lines may be represented on the surfaces of the moldings mitered to the piece $x$ if lines are drawn parallel to the respective outlines from the intersections on the miter lines of the edge lines in the molding $x$. Now, since in the three views shown in Fig. 14, no change has taken place in the thickness of the moldings, the student will readily understand that, by the application of methods already explained for producing sectional views, a cross-section of the mitered molding at right angles to its outlines may be produced readily. Such a drawing will represent an edge view of the surfaces composing the mitered molding, and, therefore, a stretchout for the pattern may at once be developed. The application of this process to the arrangement of moldings in Fig. 14 ($b$) is fully shown in Fig. 15, and if the student carefully considers the accompanying explanation, he will have no difficulty in understanding each necessary step.

The elevation and profile of Fig. 14 ($b$) are reproduced to a somewhat larger scale in Fig. 15 ($a$) and ($b$), while the lengths of the moldings are made proportionately shorter. By this process the work appears more nearly like that required of the pattern draftsman. After the views at ($a$) and ($b$) have been drawn, the stretchout for the upper molding may be at once laid off at $MN$, and the pattern developed in the usual way—precisely as if an ordinary face miter were needed. Before the stretchout $M'N'$ can be developed, however, it is necessary to produce the sectional view shown at ($c$). Accordingly, the edge lines from the view at ($b$) that were projected to the miter line when obtaining the pattern, must be drawn across the surface of the mitered molding parallel to its outlines, as shown in Fig. 15. These edge lines may, for convenience, be produced some distance toward the lower left-hand portion of the drawing, and at right angles thereto the perpendicular $a'x$ erected, as shown.

Digitized by Google

Now, as already stated, since no change has taken place in the thickness of the molding, the horizontal distances shown in the view at (*b*) may be taken in the dividers and set off from the perpendicular $a'x$ on corresponding edge lines. The outline of the changed profile may now be traced through the points thus located, as shown in the view at (*c*), and from this view the stretchout $M'N'$ may at once be developed.

The remaining portion of the development needs no further explanation. Care should be exercised when developing the stretchout $M'N'$, for it will be seen in (*c*) that the relative positions of all points—excepting only those that represent distances parallel to $a\,b$ at (*b*)—are different from those in the original profile. Proof of this last statement may be had by comparing the distances on the curved outline of the ogee, or cyma; in the view at (*b*), the points are fixed by spacing the outline with the dividers, while at (*c*) it will be clearly seen that the different spaces between adjacent points on the corresponding outline are unequal.

The principles just explained are those involved in producing patterns for situations requiring a change of profile, or, as the operation is usually termed in shop practice, "a change of stay." Several practical examples are given in the following problems, but the fundamental principles are the same in all.

## PROBLEMS.

**9.** In order to illustrate the application of the rules and processes of development as applied to moldings, a number of practical problems are now introduced. These should be reproduced by the student in accordance with the accompanying text and on the same general plan as was adopted in *Practical Pattern Problems*. Drawings thus made need not be sent for correction unless insurmountable difficulties are encountered. After the problems have been worked out,

Digitized by Google

the Examination Plate is to be drawn and sent in for correction in the usual way. The student should understand that the principles here given apply to moldings of any contour or profile. Indeed, desirable practice will be afforded if profiles other than those shown in the different problems are substituted by the student in his work on this section.

Beyond illustrating the usual short method for obtaining square face and return miters, no attention will be paid in these problems to the comparatively elementary processes illustrated in Figs. 9 to 15, for such simple situations should present no difficulties to the student that has mastered the preceding explanations.

---

PROBLEM 1.

**10. To develop the patterns for a square miter.** (Short method.)

EXPLANATION.—In this problem two miters will be developed: one, a square return miter; the other, a square face miter. The student should carefully observe the different positions of the given profiles in each of these drawings, for it is apparent that this difference of position is alone responsible for the different results in the patterns. Note also that the miter line is dispensed with, as in the case of the square-elbow pattern in a former problem. This construction can be used only when the desired miter is one of 90°—that is, a square miter. The profile of the molding used for this development may be drawn by the student to the sizes indicated by the dimension figures in Fig. 16; any other profile may be used, however, if desired. The drawings should be made full size and the developments finished in accordance with the instructions that follow.

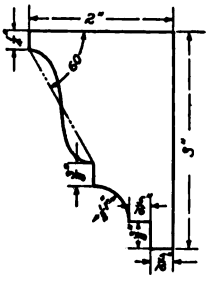


FIG. 16.

Digitized by Google

CONSTRUCTION.—The square return miter will first be considered. The profile is drawn in the position shown at (*a*), Fig. 17, in which *A B* represents the wall line, which should be produced indefinitely either above or below the drawing of the profile. In Fig. 17 it has been conveniently produced below the profile. The stretchout for the molding may conveniently be laid off, or developed, on this line, immediately below the view at (*a*), in the manner regularly applied to parallel developments. Points on the outline of the profile are indicated in Fig. 17 by lower-case letters, and corresponding points on the stretchout are denoted by similar letters and prime marks. Note that each of the curved outlines may be spaced with the dividers into any convenient number of equal parts —four divisions being represented on the cyma and two on the cove in this case. The practice of the workshop requires that a sufficient number of points should be located on the curved outlines of the profiles to enable the draftsman to trace the curve of the pattern with reasonable accuracy. It is not essential that points thus located for assumed edges should be at equal distances from one another; it will be seen, however, that if the spaces are equal they may be stepped off more rapidly with the dividers without stopping to compare each particular distance with that on the profile. After the stretchout has been developed, edge and interedge lines are drawn at right angles thereto, as shown at (*b*), Fig. 17, and the pattern is then completed by drawing developers directly from the profile view at (*a*) to the corresponding edge lines in (*b*). The outline of the pattern is next traced through the points thus located, and the edge lines along which bends are to be made are designated by circular

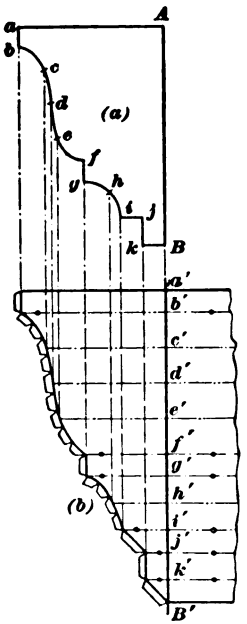

FIG. 17

Digitized by Google

indicators in the customary way. Laps should be provided along all the straight outlines of the miter pattern, as represented in Fig. 17. These laps may be wide enough to admit of the miter being riveted if desired. It is customary, also, to provide an allowance for laps along the irregular outlines. Such laps are notched in the manner represented in Fig. 17 in order that the labor of bending such edges may be reduced. If the lengths of the required moldings are known, a sufficient amount of stock may be added to the right of the miter outline, after the pattern has been transferred to the metal by one of the methods described in *Practical Pattern Problems.*

The development of the pattern for the face miter is shown in (*a*) and (*b*), Fig. 18, and, as may be seen from the drawing, is similar to that described for the return miter. The principal point of difference is in the position of the profile view at (*a*). The length of the stretchout, of course, is the same, since no change has been made in the molding, but it is seen that the outline of the pattern is materially different.

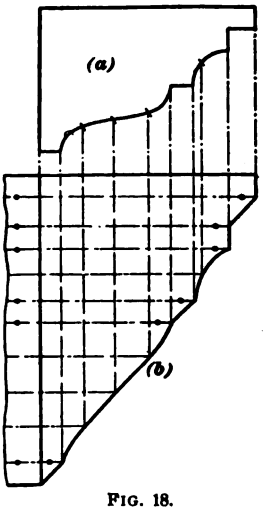

FIG. 18.

The student should compare the patterns in the two illustrations of this problem very carefully, and in so doing note that in each case where an outline is parallel to the stretchout in one pattern, the corresponding line in the other pattern is at an angle of 45° with the stretchout. This fact affords a ready means of recognizing and distinguishing patterns for face miters from those of return miters in any given profile. It is to be noted that those members of a profile that lie in a plane parallel to that of a wall or other surface against which the molding is erected are defined in the pattern by lines parallel to the stretchout. By comparison, then, with a stay, or profile, it is possible to



Digitized by Google

determine whether any given pattern already developed may be used for a face miter or for a return miter. The student that has access to the pattern room of a cornice establishment will gain desirable practice by making comparisons at every opportunity until he is thoroughly familiar with the different pattern outlines and can tell at a glance whether any given pattern is for a face or for a return miter. In a similar manner, it is possible for the student to recognize the difference between inside and outside miters, and he should not be content until he has acquired a ready facility in making such distinctions.

---

PROBLEM 2.

**11. To develop the patterns for a regular octagon miter.**

EXPLANATION.—This form of miter frequently occurs in cornices passing around octagon towers, roofs, or other portions of buildings in which the octagon angle forms part of the plan. It may be here remarked that frequently the angles of a bay window are not exactly octagonal angles. The angles of an octagon are always angles of 135°, and since the miter plane bisects the entire angle, the miter line may be formed by laying off with the protractor an angle of 67½°. The surest way, however, in order to avoid error in case the angle should not be one of 135°, is to bisect the given angle.

The octagon miter is frequently encountered in the construction of vases, finials, and other forms having eight equal sides, the plans of which are regular octagons. The method given in this problem for obtaining miter patterns is applicable for miters at any angle.

As in the preceding problem, an octagonal miter may be either a return miter or a face miter. Whether the miter be an inside or an outside return miter, the miter line will be found on the plan, while in the case of a face miter the line will appear in an elevation.

Digitized by Google

CONSTRUCTION.—As already stated, the octagonal return miter must be developed from a plan of the molding. The octagonal angle of 135° can be drawn by the aid of a 45° triangle, as shown at *C A B* in Fig. 19. From *A B* and *A C*, which represent the walls, or faces, of any structure, the

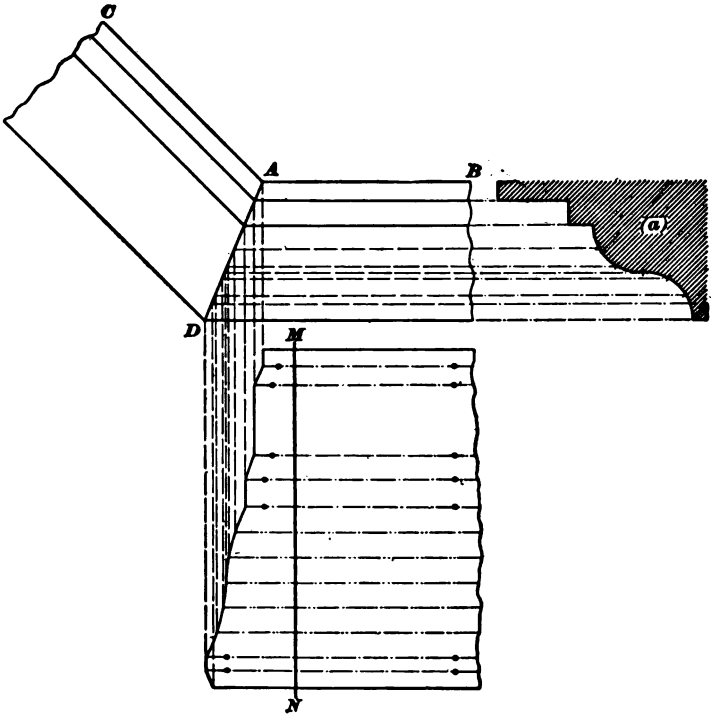


FIG. 19.

projection of the mold is set off at right angles to each and the outer edge lines drawn parallel to *A B* and *A C*; the miter line *A D* is drawn from the intersection of these lines at *D*.

Since the wall is here shown in horizontal section, the profile of the mold should be in the position shown at (*a*)—that is, with its vertical side against the wall line *A B* extended. The curved members of the profile may now be

Digitized by Google

divided into any convenient number of equal spaces and the entire stretchout set off on any line, as *M N*, drawn at right angles to the lines of the plan. Edge lines must now be projected from all points of the profile to the miter line *A D* and developers carried from the intersections on the miter line to edge lines in the development. The outline of the pattern may now be traced through the points of intersection in the development, thus completing the pattern in Fig. 19.

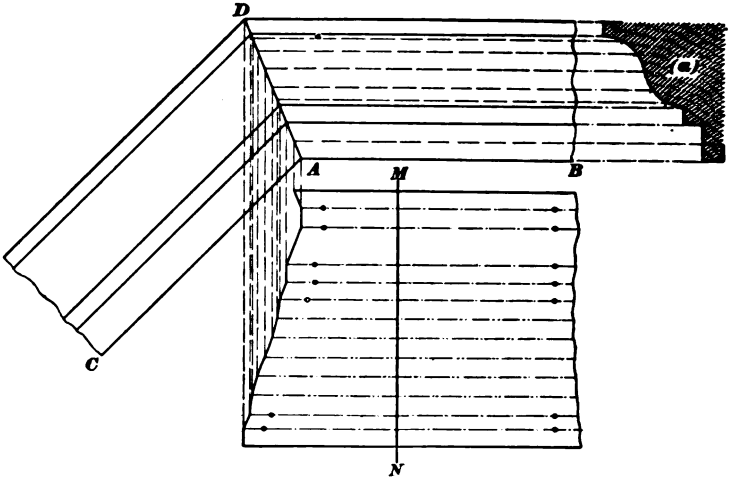


FIG. 20.

The development of an octagonal face miter is shown in Fig. 20. Here it will be seen that the profile (*a*) of the horizontal mold is placed in a vertical position and that the patterns are developed from the elevation. The process is the same as that already explained.

---

PROBLEM 3.

**12. To develop the pattern for a butt miter.**

EXPLANATION.—It frequently becomes necessary to terminate a molding against an oblique surface, such as a roof or wall whose position is at other than right angles to the lines of the molding. When this condition is encountered, what

Digitized by Google

is known as a **butt miter** is formed. The views from which the patterns can be developed must be: first, one that shows the correct edge lines of the molding, together with an edge view of the cutting plane; second, one that shows the profile of the molding in the correct relative position.

The conditions of each construction encountered by the student must be carefully studied. In some cases the edge lines of the molding, together with the cutting plane, are taken from the elevation, as in the case of a horizontal molding that finishes against a roof or of a gable molding that butts against a vertical wall. In certain other cases the edge lines of the molding and the cutting plane are to be found in the plan, as when the cornices of a bay window finish at an oblique angle against a vertical wall. In each of these cases it is important that the profile of the molding should be in its correct position as related to the view in which the edge lines are shown in their true length.

It sometimes happens that the cutting plane is oblique both to the plan and to the elevation. When this is the case, it is necessary to project a view in which the cutting plane will be shown on edge. This is a particular case, however, and involves a special construction, the projection methods of which are definitely explained in Problem 16.

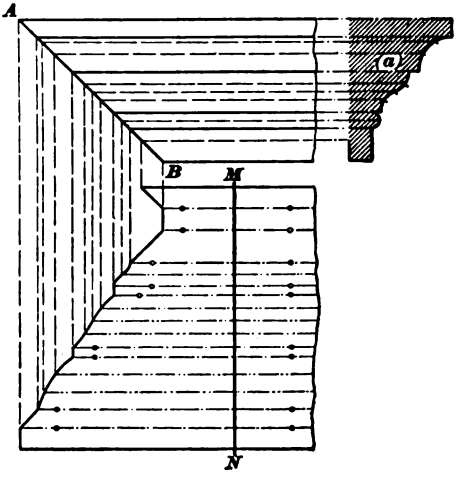

FIG. 21.

CONSTRUCTION.— Fig. 21 shows the elevation and profile of a molding that finishes with a butt miter against the oblique surface *A B*. In this view, the edge lines of the molding and the cutting plane are shown

Digitized by Google

in the elevation. The profile at (*a*) is placed in correct position, and from its several edges and interedges projectors are drawn to the cutting plane *A B*, as shown in Fig. 21. A stretchout of the profile is now laid off at *M N* at right angles to the edge lines of the elevation. Edge and interedge lines are next drawn in the usual way through the points laid off on the stretchout *M N*, and developers are then carried from the intersections on the line *A B*. The outline of the pattern may now be defined as shown in Fig. 21.

Fig. 22 shows a butt miter against a surface oblique in plan. In this view, *B C* represents the face of the wall against which the molding is placed, and *A B* represents the oblique surface against which the butt miter is made. Note particularly the position of the profile at (*a*), and compare the view here shown with that given in Fig. 21. It will be seen from Fig. 22 that the process of development, after the relative position of the views has been represented, differs but little from that already explained. No further description of the process, therefore, is necessary.

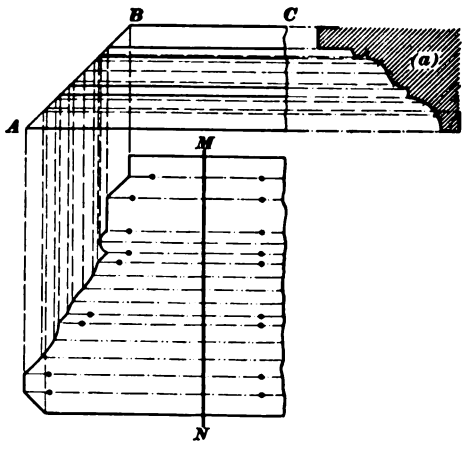

FIG. 22.

---

PROBLEM 4.

**13. To develop the pattern for a miter against the roof of a curved pediment.**

EXPLANATION.—This problem, which is really a special case of Problem 3, is frequently encountered when a cornice

Digitized by Google

containing a pediment has a balustrade, or pediment course, that terminates against the oblique roof of the pediment in the manner shown in Fig. 23. In this case the pediment

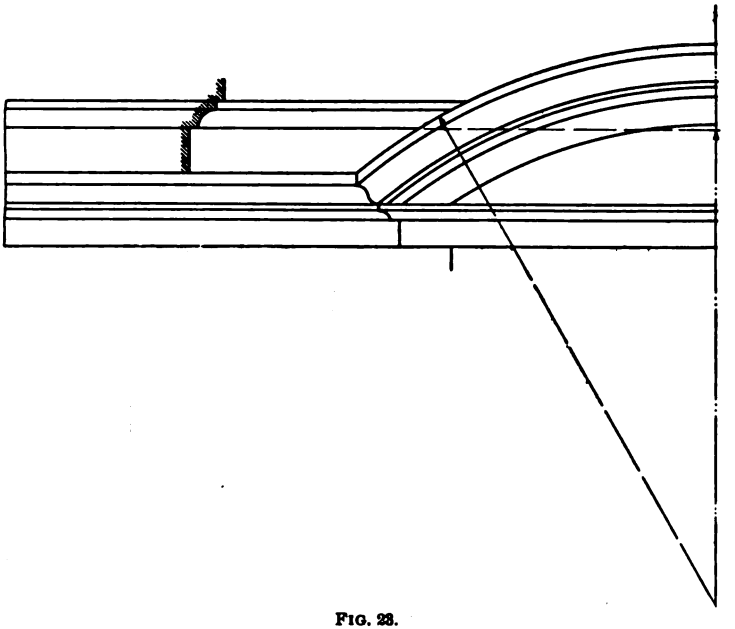

FIG. 23.

consists of curved moldings, but it will be seen from the construction that the process of development is the same as when the pediment molds are straight.

CONSTRUCTION.—Detail drawings that represent the conditions shown in Fig. 23 must be constructed with extreme care. A slight change in position of the center from which the circular molding is described will alter materially the appearance of the miter. It is therefore necessary to study the conditions very carefully, and to exercise unusual care in laying out the main lines of the drawing.

The correct position and the entire development is shown in Fig. 24. Projectors are first drawn from all points of the profile at (*a*) to the miter line—that is, to the outline of the pediment molding. The stretchout *MN* is next laid

Digitized by Google

off in its correct position, edge and interedge lines are drawn perpendicular thereto, and the drawing is completed by developers drawn from the points of intersection on the miter line to the respective edge lines on the stretchout. The outline of the pattern, so far as the curved portions of the profile are concerned, may now be defined by lines traced through the corresponding points of intersection in the development. The horizontal members of the profile

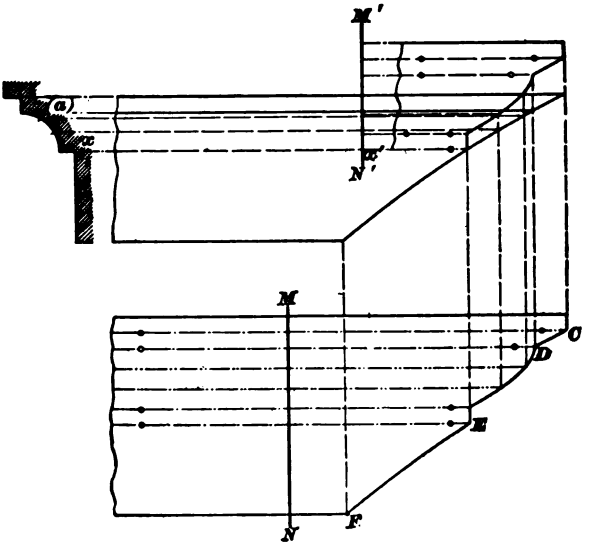


FIG. 24.

are defined in the pattern by straight lines, while the vertical members of the profile, as from *C* to *D* and from *E* to *F*, must be defined by a curve of the same radius as that of the miter line. This radius, however, is usually too long to be used conveniently, in which case the pattern draftsman overcomes the obstacle by tracing from the elevation a sufficient portion of the required curve. He then transfers the curve to the pattern by a similar process, or perhaps cuts a small templet to the curve, and with this device draws the line between the required points in the same manner as with a rule.

Digitized by Google

In case the curve of the pediment against which the molding miters should happen to be other than the arc of a circle, it is apparent that the miter cuts for those portions of the pattern that correspond to the vertical members of the profile must be exact duplicates of the respective portions of the elevation from which they are derived. To avoid tracing or otherwise duplicating any particularly difficult curve that a given design might contain, the stretchout, beginning at the point $x$ of the profile, may conveniently be laid off in the manner shown at $M'N'$ in Fig. 24, in which case the stretchout, of course, would extend upwards from a corresponding point $x'$ of the elevation. Some care is necessary, however, when a development is thus laid over a portion of the projection drawing, in order that no confusion may result between the different lines.

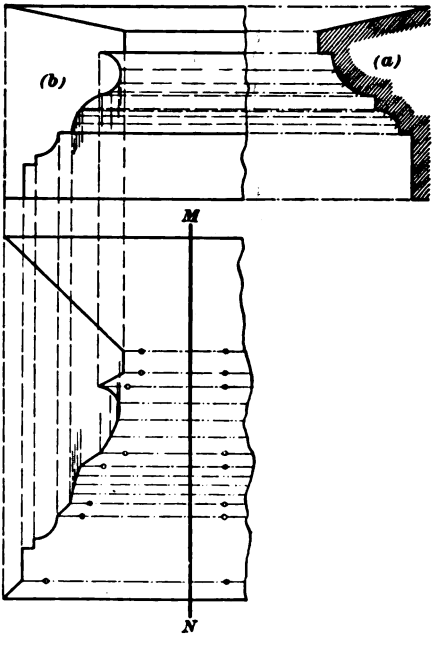

FIG. 25.

---

PROBLEM 5.

**14. To develop the patterns for a miter between moldings of different profiles.**

EXPLANATION.—It is sometimes necessary, especially in repair work, to bring moldings of entirely different profiles together in a miter. When this situation is encountered, the draftsman should endeavor to design at least one of the profiles so that the different moldings will have some members in common. Figs. 25 and 26 illustrate two profiles between which a square miter is to be made, and

Digitized by Google

it will be seen from the illustrations that certain members of each profile are in the same horizontal plane. In this problem, the miter to be made, as shown in the illustrations, is one between horizontal moldings, and corresponds, to a certain degree, with what has heretofore been termed a return miter. Two elevations of different profiles must be drawn. In Fig. 25, the arm (*b*) is in profile and the arm (*a*) is shown with its edge lines in their true lengths; that is, the edge lines in (*a*) butt against the profile (*b*). It is necessary, in this figure, to show the profile of the mold (*a*) to the right, where it is correctly placed with respect to the arm (*b*). In Fig. 26 is shown a side view of this miter; the molding (*a*) is in profile and the molding (*b*) appears with its edge lines in their true lengths and butting against (*a*).

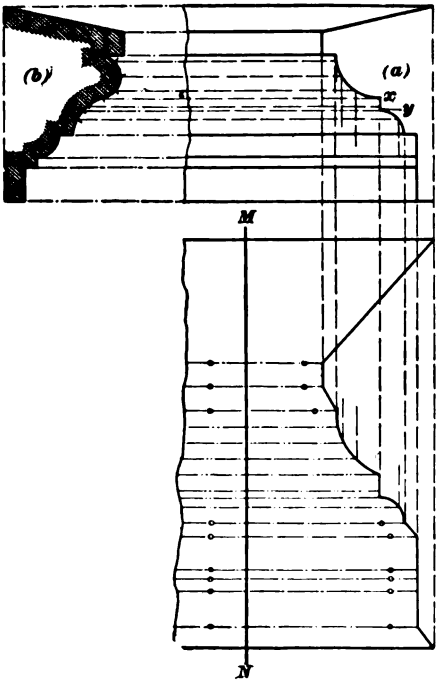


FIG. 26.

CONSTRUCTION.—The views having been drawn in the positions shown in Figs. 25 and 26, each molding whose edge lines are shown in their true lengths is to be treated in turn in the same manner as the edge lines of the butt miters in the two preceding problems.

In Fig. 25, the curved portions of the profile (*a*) are first divided into any convenient number of equal spaces. Projectors representing the edge and interedge lines are next to be drawn to the view at (*b*). The stretchout *M N* is then

Digitized by Google

developed in the usual manner, and the development is completed by developers drawn from the elevation to the pattern. The wide fascia member of (*a*), however, as will be seen from Fig. 25, intersects a curved portion of the molding (*b*), and must be cut to a corresponding outline.

In Fig. 26, where the profile (*b*) miters against the molding (*a*), the same course is pursued. If, however, after having divided the cyma of (*b*) into equal spaces, it should be found that none of the edge lines should exactly meet points *x* and *y* of profile (*a*), projectors from *x* and *y* must be carried back to profile (*b*). Such projectors, of course, define points on profile (*b*) that must be located on the stretchout *MN* in a corresponding position. Edge lines on the patterns must then be drawn through these points and intersected in the pattern by developers drawn from *x* and *y* of profile (*a*).

When a profile of this description is encountered, it is sometimes advisable to finish one of the moldings with a square end and to cut a miter on the other molding only. When the molding is erected, the arm on which the miter is cut is fitted over the other molding in the same manner that a carpenter would make a coped joint.

---

PROBLEM 6.

**15. To develop the patterns for a boss, or drop, on the face of a bracket.**

EXPLANATION.—The faces of brackets, or modillions, are frequently ornamented with mitered drops, or bosses, some examples of which are shown in Figs. 27, 28, and 29. The bracket, or modillion, face is usually molded to a particular profile, and the sides of the drop, as seen in the illustrations, are mitered against the bracket face. The outline of the drop is sometimes made to correspond with the profile of the bracket face to which it miters, as in Fig. 27. Occasionally, however, the outline of the drop is drawn to a different shape, as in Figs. 28 and 29.

Digitized by Google

CONSTRUCTION.—When the outline of the drop is the same as that of the bracket profile, the pattern is that of a simple square inside miter, and is developed in accordance with the construction given in Problem 1. It is customary to construct the bracket face in accordance with the profile given in the side view. That part of the face from *B* to *C* which receives the ornamentation is then cut to the outline given in the front view, after which the sides of the drop are cut

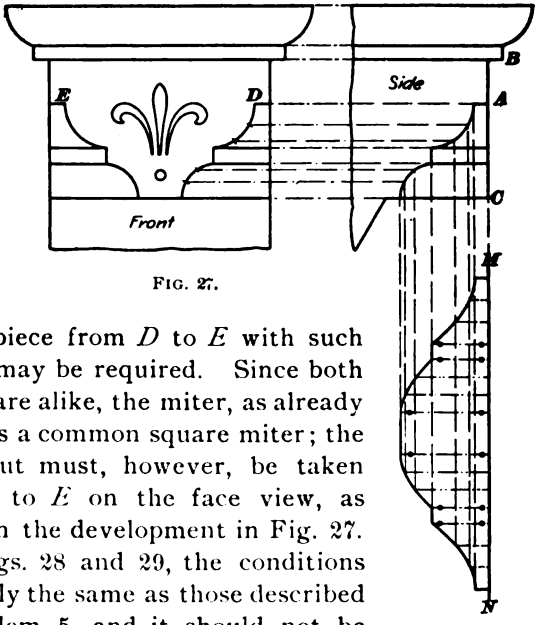


FIG. 27.

in one piece from *D* to *E* with such laps as may be required. Since both profiles are alike, the miter, as already stated, is a common square miter; the stretchout must, however, be taken from *D* to *E* on the face view, as shown in the development in Fig. 27.

In Figs. 28 and 29, the conditions are nearly the same as those described in Problem 5, and it should not be difficult for the student, without further description, to lay out the developments here shown.

The principles of the problem are applied in a similar manner when it is required to fit a round boss over the intersection of two moldings, as in Fig. 30. Situations of this sort are to be found at the corners of panels in ceilings where a boss of this nature forms a base on which stamped ornaments are fastened. An inspection of the drawing shows that the profile of the boss corresponds to the outline of the

Digitized by Google

cylinder, the curved surface of which is to be mitered against

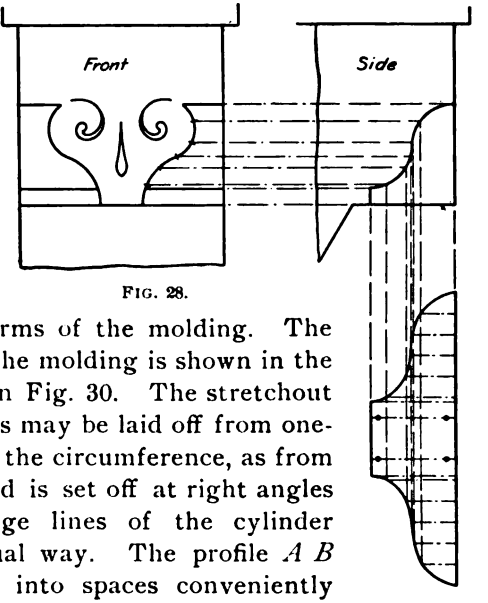


FIG. 28.

the four arms of the molding. The profile of the molding is shown in the side view in Fig. 30. The stretchout for the boss may be laid off from one-quarter of the circumference, as from *A* to *B*, and is set off at right angles to the edge lines of the cylinder in the usual way. The profile *A B* is, divided into spaces conveniently chosen with reference to the members of the molding.

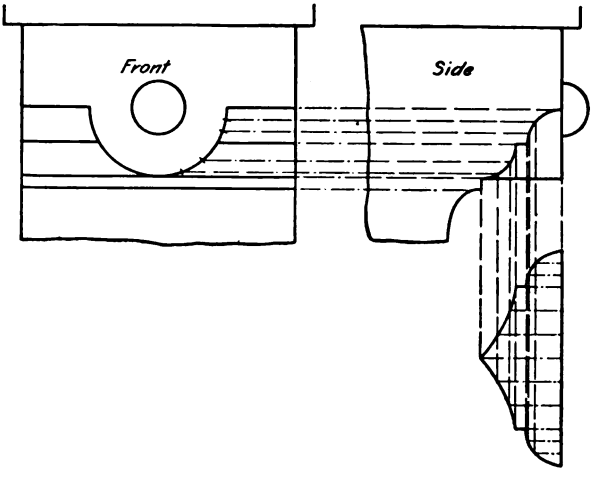


FIG. 29.

This is indicated in Fig. 30 by the numbered points on the

Digitized by Google

profile, which, as will be seen, are placed on the edges of the molding, while in the spaces between them interedge lines should be located in the usual manner. The final

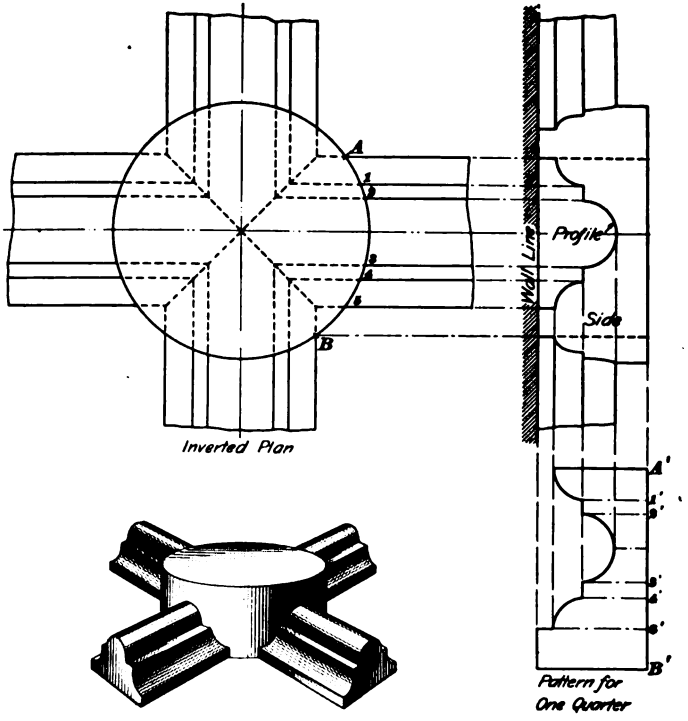


FIG. 30.

operations by which the pattern is developed are practically the same as in preceding problems, and need not be further described.

---

PROBLEM 7.

**16. To develop the patterns for a miter between a straight and a curved molding.**

EXPLANATION.—In many cornice designs, a miter is required between straight and circular moldings having similar profiles. Examples of this are to be seen in circular

Digitized by Google

segmental pediments and in panel moldings that finish with certain curves. Reference to Figs. 31 and 32 will show that the miter line between such moldings is not a straight line, but must be developed, member by member, until the entire mold is represented on the drawing. The amount of curvature in the miter line varies with the obliquity of the angle of the miter. In cases where the angle is very obtuse, the miter line is so nearly a straight line that for all practical

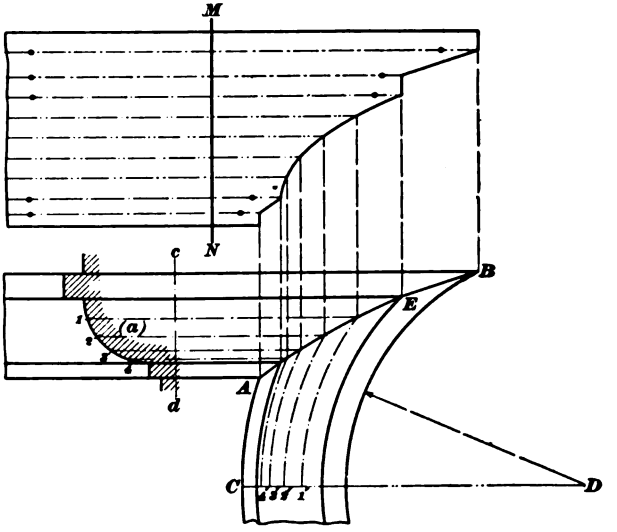


FIG. 31.

purposes a straight line will be sufficiently accurate. As the angle becomes more acute, however, and also as the width of the mold increases, the curve of the miter line becomes greater. The position of the miter line is determined by the same points used to develop the pattern, and both operations, therefore, may be carried along together by the draftsman.

CONSTRUCTION.—Fig. 31 shows a miter in a panel mold whose curved end is drawn to a specified radius. The profile of the panel mold is shown in its correct position at (*a*). The curved portion of the profile at (*a*) is first divided into any convenient number of equal spaces, and the

Digitized by Google

stretchout $MN$ is next developed in the usual manner, as shown in Fig. 31. Projectors are then drawn to represent the several edges and interedges of the profile at ($a$) and are extended indefinitely toward $B$. Now, on any line, as $c\,d$, drawn at right angles across the projectors, the spaces between the projectors may be measured and transferred to any radial line, as $C\,D$, crossing the curved mold. The points thus obtained on $C\,D$ may be numbered to correspond with those on the profile of Fig. 31 ($a$). Next, circular projectors should be described from $D$ as a center through the numbered

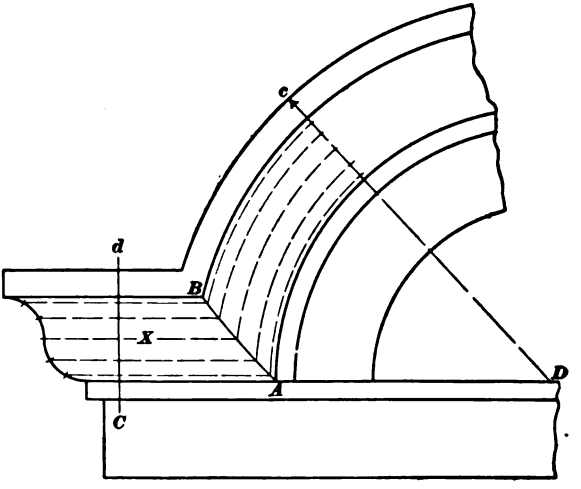


FIG. 32.

points on $C\,D$ and extended until they intersect the projectors from correspondingly numbered points of the view at ($a$). A line traced through the points of intersection from $A$ to $B$ will then give the required miter line. It is not absolutely necessary, so far as the pattern is concerned, that the miter line should appear on the drawing, since the developers required for the pattern must be drawn only from the points of intersection on the elevation.

The difference between the correct line thus determined and what would be the miter line if both arms of the miter were straight may be seen by drawing a straight line from

Digitized by Google

*A* to *B*. When the pattern is cut out, the flat surfaces, as from *E* to *B*, may, of course, be cut straight.

Fig. 32 shows a design for a semicircular pediment to which the principles just described may also be applied. The student should be able to develop the miter line *A B* and the pattern for the horizontal mold *X*, with its face miter at the right and its square return miter at the left, without difficulty.

---

PROBLEM 8.

**17. To develop the patterns for a curved molding.**

EXPLANATION.—The patterns for curved moldings are developed by the radial process described in *Development of Surfaces*. Certain problems of this nature have already been given in *Practical Pattern Problems*, and the methods used to obtain the patterns for curved moldings differ but little from those already given. The blanks, or patterns, for curved moldings are invariably obtained from frustums of cones, although the heights of the frustums are usually less than those encountered in *Practical Pattern Problems*. The patterns, therefore, for curved moldings are considered merely as strips having the general flare of the mold. These strips are laid out with reference to the general contour of the profile, and are brought up to the required shape by the "raising" process.

This problem consists not only in finding the proper radius by which the flaring strip shall be described, but also in determining such a bevel, or angle of flare, as will most nearly approach all points of the required profile. The method usually adopted by cornice cutters for determining the flare is to draw on the profile a line through the extreme points of that portion to be raised in one piece. In such a profile as that shown in Fig. 33, where the portion from *B* to *C* is required in the

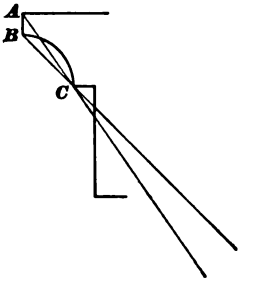

FIG. 33.



Digitized by Google

pattern, the oblique line may be drawn as shown by *B C*. Should it be desirable to include the upper fillet in the pattern, the oblique line, of course, should be drawn through *A* and *C*, as shown in the illustration.

CONSTRUCTION.—Fig. 34 shows a half-elevation of a design that requires a curved molding, the profile being shown at (*a*), while the center from which the elevation of the arch is described is shown at *o*. The angle of the flaring strip is first determined in the manner already explained, and the oblique line drawn through the profile is produced until it meets at *C* a line drawn from the center of the arch. It will now be seen from the illustration that *B C* represents the axis of a cone, of which *A C* is one side and *A B* one-half of the base. The cone may now be extended beyond the

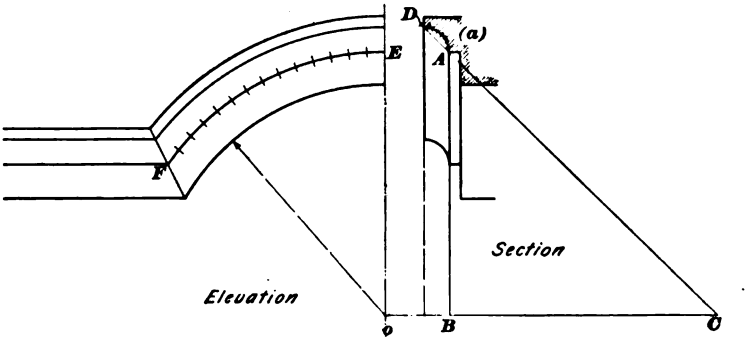


FIG. 34.

base *A B* and a parallel to *A B* drawn as shown. It may now be seen that *A B* represents the upper base of the frustum of which the blank for the pattern is a segment. The side, or slant height, of this frustum is determined by the width of metal necessary to form the molding. Therefore, the stretchout of the different members to be raised is set off on *C A* extended, as shown by *A D*. Such edges or laps as may be necessary for the construction are next added on both sides of *A D*. The pattern may now be described by the customary radial method, using *C A* and *C D* for the respective radii, as shown in Fig. 35. Since the axis of the

Digitized by Google

cone thus represented occupies a horizontal instead of an erect position, the plan of the cone is found in the curves of the elevation. Since, therefore, the point $A$ of the profile corresponds with $E$ of the elevation, the length of the blank is found by measuring the length of the arc $E\,F$ and setting off a similar distance on the corresponding arc in the development. This is shown by $A\,E$ and $E\,A'$, Fig. 35. Lines drawn from $C$ through $A$ and $A'$ will complete the pattern.

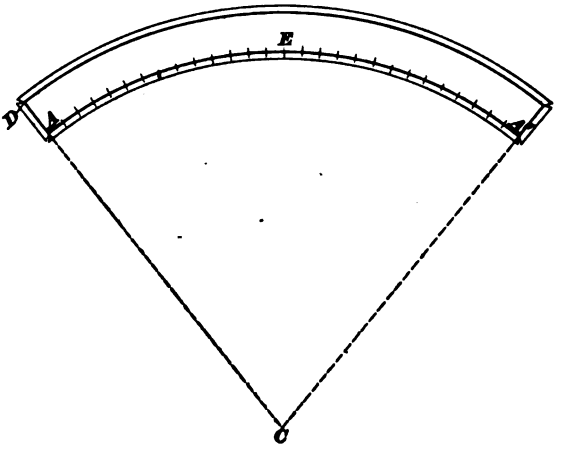


FIG. 35.

The proportions, position, and shape of curved moldings vary to such an extent that another example is here introduced. Fig. 36 shows an elevation and a half plan of a circular finial, which, exclusive of the base and top, is composed entirely of circular moldings. The profiles of the several moldings are shown in the elevation, while the bases of the cones of which the blanks are frustums are found in the plan. In separating the design into parts convenient for raising, the upper part from $A$ to $E$ may be divided by a horizontal line drawn from $C$, thus making $A\,C$ and $C\,E$ alike. While the lower part from $E$ to $B$ could, perhaps, be made in one piece, it can more easily be made by separating it at $D$.

Digitized by Google

In accordance with the instruction already given, the flare and the length of radius for a pattern of the upper mold may be obtained by drawing a line through $C$ and $A$ and extending it to the center line of the elevation, which,

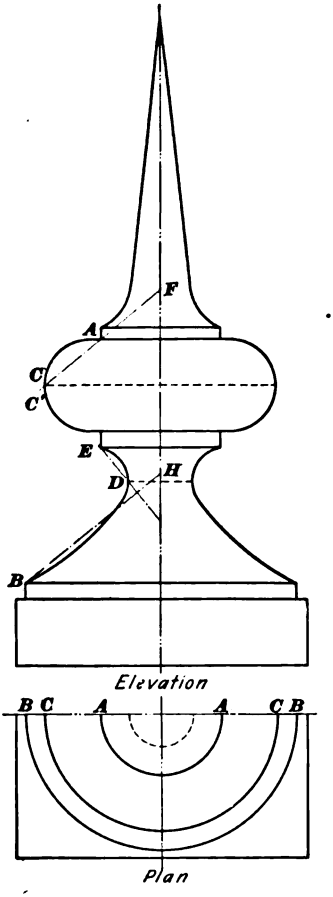


FIG. 36.

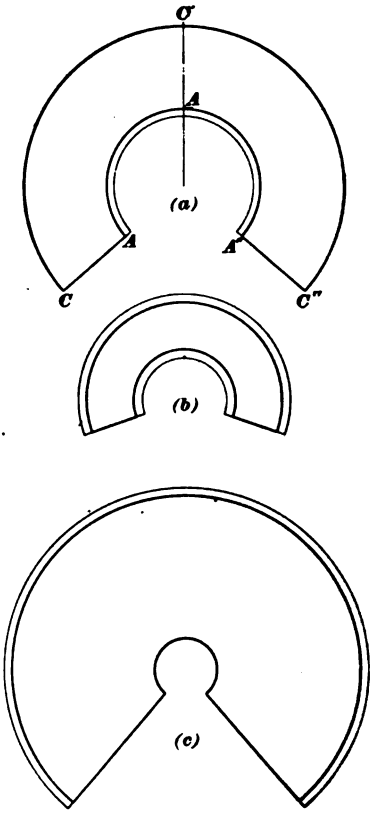


FIG. 37.

in this case, is the axis of the cone. After setting off the stretchout of the profile $A\,C$ on the line $A\,C$ extended to $C'$, the radii of the blank are seen to be, respectively, $F\,A$ and $F\,C'$. The pattern obtained from these radii is shown in

Digitized by Google

Fig. 37 (*a*). The length of the blank, of course, is taken from the outline of the cone shown in the plan of Fig. 36.

To determine the flare for the blank for the lower part of the finial—that is, from *B* to *D*—the oblique line may be allowed to follow very closely the portion of the profile that is nearly straight. By so doing, but little hammering will be required in this portion of the blank, while the upper part, being much less in diameter than the lower, will also require less labor in bringing it to place. The stretchout of the profile, in this case, is then set off from *B* toward *H* and the circumference is measured on *B*–*B* of the plan, as shown in Fig. 37 (*c*).

The method of obtaining the pattern of that portion of the finial from *D* to *E* is indicated by the line of flare *E*–*D*, and the pattern is shown in Fig. 37 (*b*).

No attempt should be made to cut a miter at the end of a curved molding, for it is impossible to allow accurately for the stretching of the metal. It is best to make the blanks of such lengths that material will be provided for trimming when the work is put together.

---

PROBLEM 9.

**18. To develop the patterns for a miter between a crown molding and a volute.**

EXPLANATION.—This problem is presented not for the reason that it involves any unusual principle, but rather because it is a case of common occurrence, and illustrates the manner in which principles already given may be applied.

The design shown in Fig. 38 is sometimes used in the upper finish of a broken pediment. Frequently, too, the upper members of a crown molding in a lintel cornice are finished in a similar manner.

CONSTRUCTION.—The volute, or scroll, may be drawn by the method given in *Geometrical Drawing*, and is the same as that frequently seen in the sides of brackets and modillions. If desired, the scroll may be drawn by freehand

Digitized by Google

methods, and the curvature modified to suit the fancy of the draftsman. The volute here shown is composed of arcs of circles described from centers located at the corners of the small dotted square in the central portion of the volute in Fig. 38. The greater portion of the cyma in the cornice ends squarely at the line $A\,B$, while its lower portion, together with the fillet, the small cove below, and the fascia, miter against the sides of the scroll from $A$ to $c$. Since only that portion of the cyma below $A$ is to be mitered against the scroll, a projector is first drawn from $A$, parallel to the edge

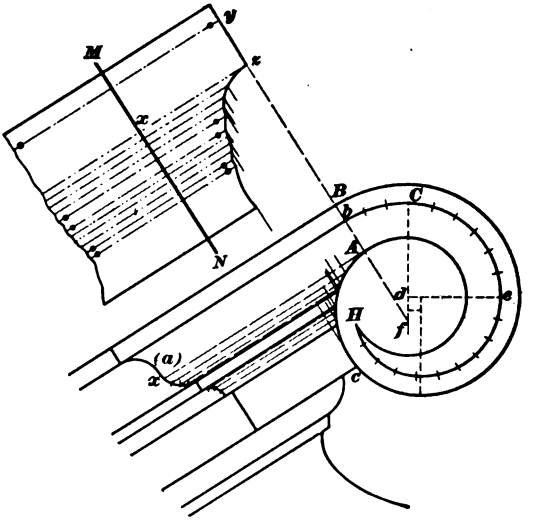


FIG. 38.

lines of the molding, until it intersects at $x$ the profile shown at $(a)$, Fig. 38. That portion of the cyma below $x$ is next divided into any convenient number of equal spaces, as is also the outline of the cove member. The stretchout $M\,N$ is now developed in the customary manner, as shown in Fig. 38. The operation of developing the pattern for the portion of the molding that butts against the scroll is the same as if the molding were to be mitered against a curved roof, as described in Problem 4. Since the process is fully shown in Fig. 38, further description is unnecessary.

Digitized by Google

The pattern for a blank to form the curved mold that, beginning at the line *A B*, forms the depressed portion of the volute, can be cut in accordance with the method described in the previous problem. Since the radii used, however, are so much shorter than those there employed, definite instructions will be given.

As will be seen from the elevation, the molding includes arcs of four different circles; the pattern, therefore, should be described from the same number of centers. In practice, however, if the pattern is correctly drawn through the first two or three arcs, the remaining segments may be described from the center last obtained. In order to obtain the correct radii, the diagram shown in Fig. 39 should be constructed. In this view, an erect profile of the crown molding is first to be drawn—the cyma only being necessary. Next, through the extreme points *D* and *E* of the cyma, a line to establish the flare of the blank is drawn and produced indefinitely, as shown in the illustration. Now, from *D*, Fig. 39, a perpendicular is erected upon which the several radii of the elevation are set off—that is, *b f*, *C d*, etc., Fig. 38. The required radii for the first two segments of the pattern may then be taken from Fig. 39 as *D f'* and *D d'*.

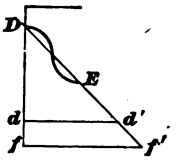

FIG. 39.

The pattern for this blank is shown in Fig. 40. The lengths of the arcs *b c* and *c e* of the pattern, together with the remainder of the pattern *e* to *H*, are made equal to the lengths of corresponding parts of the elevation. Thus far, only the outer line of the pattern has been drawn. The distance *y z* from the pattern outline obtained in Fig. 38 may now be set off from *b* toward *f*, as shown at *x*, Fig. 40. The line from *x* to *H* can be drawn only approximately, but the student should be careful to leave a sufficient width to permit of trimming after the blank has been raised.

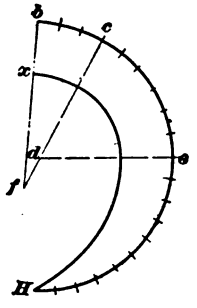

FIG. 40.

Digitized by Google

PROBLEM 10.

**19. To develop the patterns for a pediment molding with raked profile.**

EXPLANATION.—Reference has already been made, in *Architectural Proportion*, to the methods used in producing a profile for inclined moldings that miter directly to square returns. If the returns of such inclined moldings are short and finish against a wall, it is customary to rake the profile of the return and to use the original, or normal, profile for the inclined moldings. The reason for this is that a raked profile is always a more or less distorted one, especially if the angle of inclination is large. If the length of the return is considerable, however, or if it is mitered again at the back and forms part of a belt course, the normal profile may be used for the horizontal moldings and the profile for the inclined moldings obtained by raking.

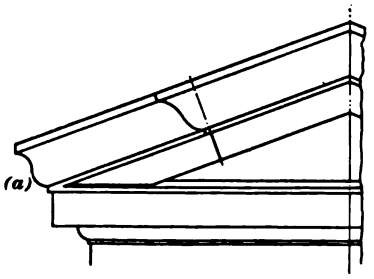


FIG. 41.

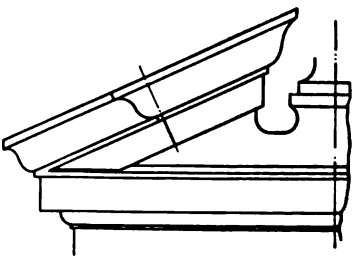

FIG. 42.

A half elevation of a pediment frequently used is shown in Fig. 41. Here the profile of the return is normal, as shown at (*a*), while that of the inclined molding is changed, or raked, to correspond. Fig. 42 shows a broken pediment in which the profile of the inclined molding is normal and the profiles of both upper and lower returns are raked.

CONSTRUCTION.—The normal profile shown at Fig. 43 (*a*) is first drawn. From this profile the lines of the level molding and also those of the inclined molding are projected as shown. To obtain the rake profile, *B C* is drawn at right angles to

Digitized by Google

the inclined molding, and a copy of the normal profile is placed thereon, as shown at (*b*), Fig. 43. Next, the curved portions of both normal profiles are divided into the same number of equal spaces. The points defining these spaces, together with the edges of the profiles, may then, for convenience of reference, be indicated by corresponding letters and numerals. From each of the points in the profile at (*a*), projectors are next carried indefinitely toward *B C* and are then intersected by lines parallel to *B C* drawn

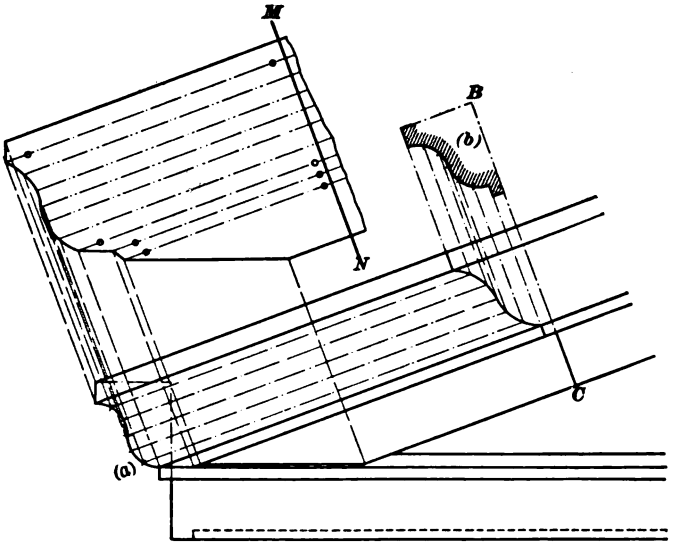


FIG. 43

from corresponding points in the upper profile. The profile of the rake molding may now be traced through the points of intersection thus found.

The stretchout of the raked profile is next developed on *M N* at right angles to the rake molding, and the usual edge lines are then drawn. Note that when the stretchout for the curved portion of the rake profile is laid off, each space must be taken separately, since they are of unequal length. Developers may now be drawn from points on the profile at (*a*) to the corresponding edge lines in the

Digitized by Google

development, thus completing the pattern. Observe that the lower fillet and fascia miter against the sloping wash of the level cornice, the patterns for which are described in a later problem. The pattern for the return at the lower end of the rake molding is a simple square return miter developed from the profile (*a*) in the usual manner.

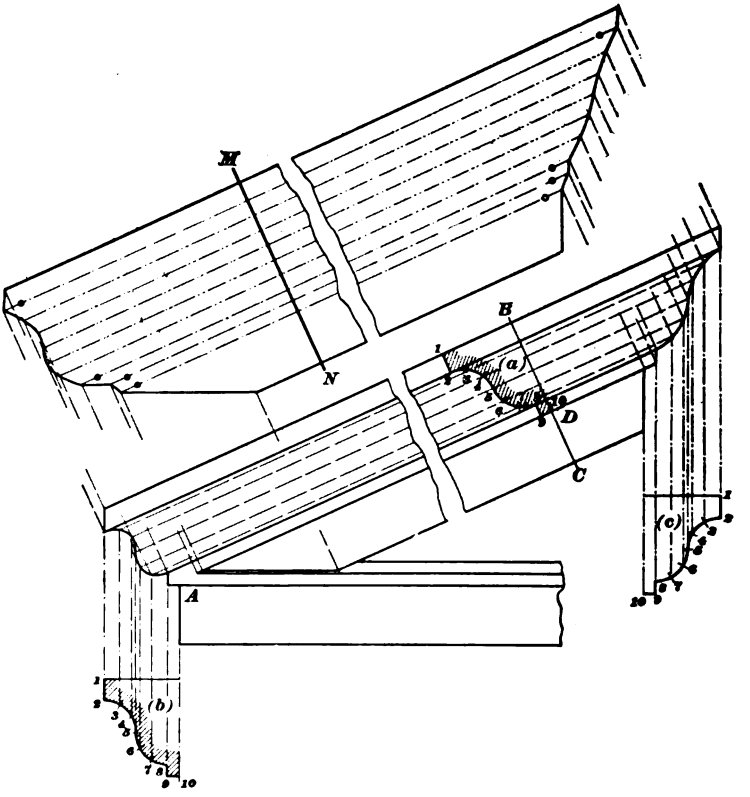


FIG. 44.

Fig. 44 shows the method used to rake the return moldings when the normal profile is used for the inclined molding. The profile of the fascia and the fillet should first be drawn as at (*a*); then, from *1*, the upper point of the fillet, a line is drawn at the required angle. The normal profile is

Digitized by Google

next copied in the position shown in Fig. 44 (*b*). In case a return is needed at the top, as in a broken pediment, another normal profile must be placed as shown at (*c*). Points are next located in corresponding positions on the different profiles and denoted by similar numerals for convenience of reference. Projectors from all points of profile (*a*) may now be drawn parallel with the rake indefinitely in both directions and intersected by other projectors drawn from corresponding points in the profiles at (*b*) and (*c*). The rake profiles may next be traced through the points of intersection, as shown in Fig. 44.

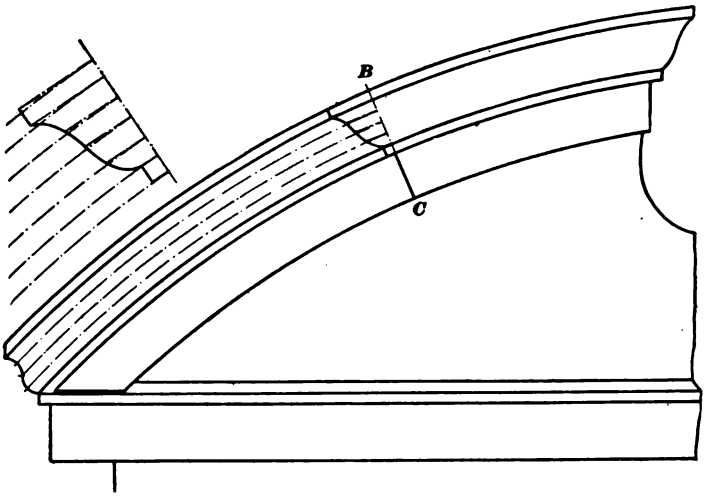


FIG. 45.

The pattern for the rake molding is obtained by a process similar to that in Fig. 43. Since the operation is fully shown in Fig. 44, further description is unnecessary.

The patterns for the returns are obtained by using the raked profiles in Fig. 44 as was the normal profile in Fig. 43—that is, ordinary square miters are developed.

In the case of a pediment whose outline is curved, the operations of raking a stay may be accomplished by lines carried from points in the lower normal profile around the curve to *B C*, Fig. 45. If the profile of the curved molding

Digitized by Google

is raked, the view must be constructed, not on the curved lines but on lines drawn perpendicular to the radius $BC$, as shown by the small drawing in the upper portion of Fig. 45. When the curved molding has the normal profile, the lines from points on the profile are first drawn perpendicular to $BC$; from the intersection points on $BC$, circular projectors are then carried around the curve and are used to obtain a raked profile at the top or at the foot of the pediment in the same manner as the straight projectors were used in Fig. 44.

---

PROBLEM 11.

**20. To develop the patterns for a pediment molding raked from an octagon miter.**

EXPLANATION.—The cornices used to finish the upper portion of an octagonal tower are sometimes designed with pediments on the four alternate sides, while the cornices on the intermediate sides remain horizontal. If the crown molding of the pediment in such cases is to be mitered directly with that of the horizontal cornice, a raked profile must be obtained. The process employed differs from that already explained in that the raked profile, instead of being projected from the normal profile of the horizontal molding, is derived from a certain view of the octagon miter.

CONSTRUCTION.—The conditions just described are shown in Fig. 46, which contains a plan and an elevation of a pediment whose crown molding is raked from the horizontal molding. It will be seen that the normal profile is first drawn as shown at ($a$). The lines of the horizontal molding on the oblique side are then drawn as shown. Next, a plan is represented as in Fig. 46, and the projection of the cornice molding is indicated by lines drawn parallel thereto. The miter line $AB$ may next be drawn as described in Problem 2. A duplicate of the normal profile is then drawn in the plan as shown at ($b$). As in the preceding problems, the outlines of both profiles are similarly spaced and the

Digitized by Google

points may be indicated by corresponding notation. From all points of the profile (*a*), lines are projected an indefinite distance into the elevation, and from points in the profile (*b*), projectors parallel to the wall line are extended

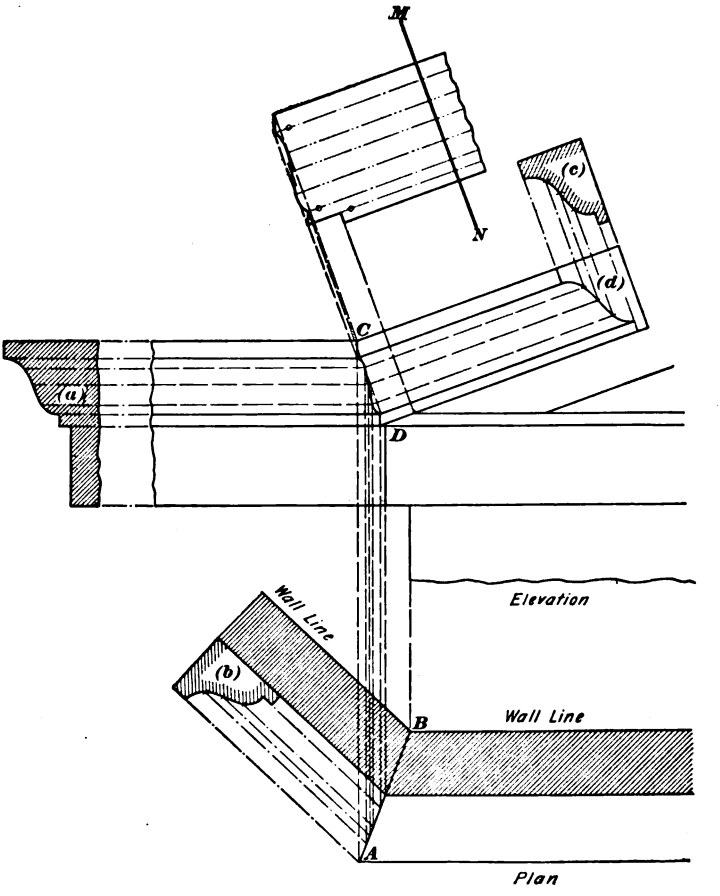


FIG. 46.

until they intersect the miter line *A B*. From points thus obtained on the miter line in the plan, vertical projectors are drawn to the elevation, where they must intersect projectors drawn from corresponding points of the profile at (*a*).

Digitized by Google

The oblique view of the miter is now to be represented in the elevation by a line traced through the points of intersection from *C* to *D*. The elevation of the pediment may now be completed by lines drawn at the desired angle from the several edges of the miter *C D*, as shown in Fig. 46.

The method employed to obtain the profile of the rake molding at (*d*) is similar to that described in the preceding problem. The foreshortened view of the miter *C D* is used as if it were the profile of a square return, and projectors are drawn parallel with the lines of the rake molding from all of its edges and interedges. These projectors are next intersected with projectors from corresponding points of a normal profile placed as shown at (*c*). The profile at (*c*), of course, must be divided in a manner similar to those shown at (*a*) and (*b*).

The stretchout *M N* is developed from the profile at (*d*), each space of which must be separately transferred. The pattern is completed in the usual manner by edge lines, interedge lines, and developers drawn as shown in Fig. 46.

---

PROBLEM 12.

**21. To develop the patterns for a miter between pediment moldings of different pitch.**

EXPLANATION.—It is sometimes desirable to provide a finish of cornice moldings for a square tower on each side of which a pediment is formed and to finish the lower ends of the pediment moldings upon one another. When the four sides of the tower are of equal width, the lengths of the pediment moldings are necessarily the same. Should the tower, however, be constructed with two opposite sides wider than the other two, the profile for the pediment moldings on two of the sides must be raked. This is obviously necessary, since the angles of the pediment are unequal.

Two elevations of a tower having unequal sides are shown in Fig. 47. So far as the plan is concerned, the miters appear the same as ordinary square miters. It will be assumed,

Digitized by Google

in this problem, that the adjacent gables are of the same height, although different in width. It will be seen from Fig. 47 that the true lengths of the edge lines are shown

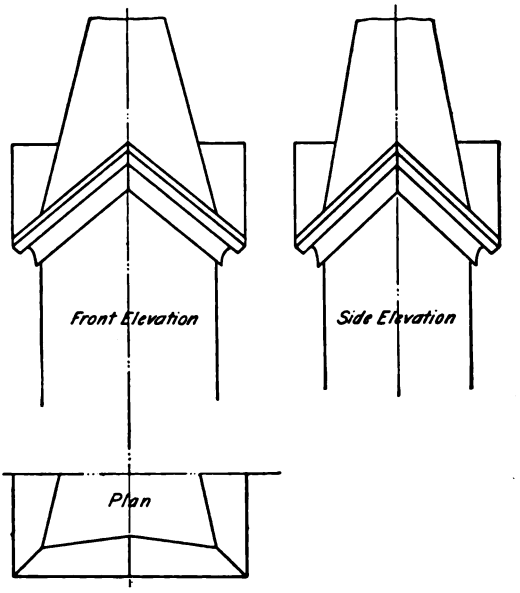


FIG. 47.

only in the elevation, while the miter line—that is, the edge view of the miter plane—is seen only in the plan. It is first necessary to construct a correct elevation of the miter.

CONSTRUCTION.—Let it be assumed that the normal profile shown at (*a*), Fig. 48, is to be used on the narrow sides of the tower and that the moldings of the wider sides are to be raked to correspond. The line *A B* is first drawn on the narrow side of the tower at the required angle, and from *A* a vertical line is drawn to represent one of the corners. The normal profile is then drawn in the position shown at (*a*), with the vertical lines at right angles to *A B*. From any convenient position on the vertical line from *A*, the normal profile is placed as shown at (*b*). Next, the curved portions of both profiles are divided into the same number of equal

Digitized by Google

spaces. From the several edges and interedges of the profile at (*a*), lines parallel to *A B* are drawn indefinitely toward the miter. These lines are then intersected by perpendiculars drawn from corresponding points in the profile at (*b*).

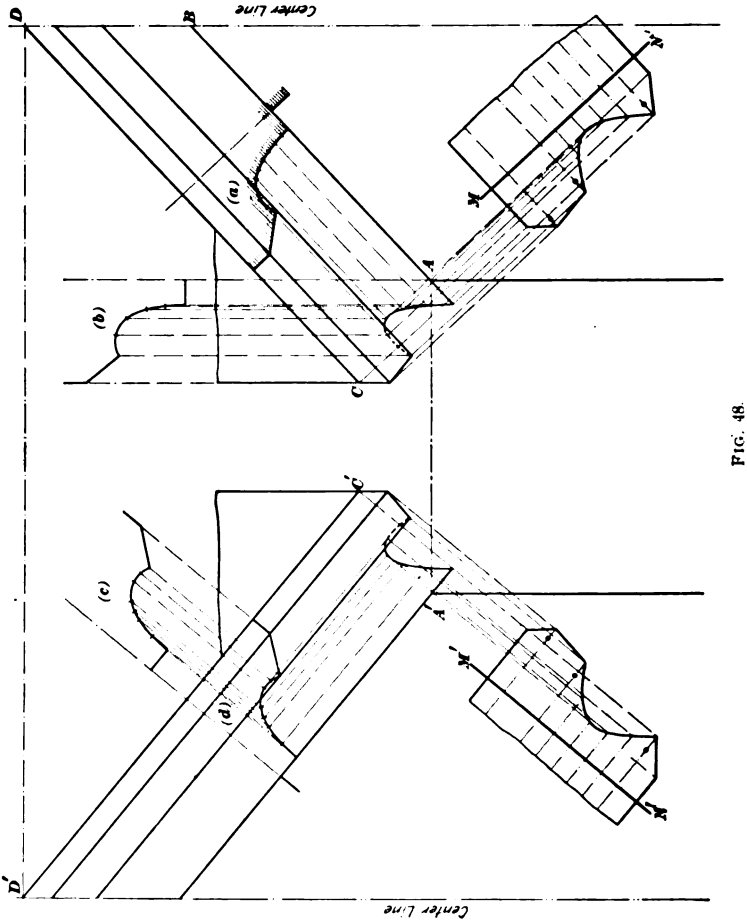


FIG. 48.

A line traced through the points of intersection, as shown from *A* to *C*, will give the correct elevation of the miter, and will also define the termination of the edge and interedge lines of the pediment molding.

Digitized by Google

The pattern for this pediment molding may now be developed on the stretchout $MN$. This stretchout is derived from the profile at ($a$), and the drawing is completed by the aid of developers from the several points of intersection obtained in $A\ C$. The miter at the apex of the gable is, of course, an ordinary face miter, and may be obtained by the usual method. In the case of a tower whose four sides are equal, the pattern thus obtained will answer for all of the pediment moldings.

To obtain the raked profile and pattern for the molding on the wider sides of the tower, an elevation must be drawn as shown on the left in Fig. 48. A vertical line is first drawn to represent the angle, or corner, of the tower, and a horizontal line is next projected from $A$ to intersect the vertical at $A'$. On this line, with $A'$ as its lowest point, a duplicate of the miter $C\ A$ is next placed, as shown by $A'\ C'$. At a horizontal distance from $A'$ equal to one-half of the width of the wide side of the tower, a vertical center line is drawn. From $D$, the apex of the narrow gable, a horizontal line that cuts this center line at $D'$ is then drawn. A line from $C'$ to $D'$ will establish the pitch of this gable, and lines from the several edges and interedges of the profile $C'\ A'$ are next drawn parallel to $C'\ D'$. The raked profile of this molding is next obtained in the manner described in Problem 10; that is, the normal profile is copied in the position shown at ($c$), on any line drawn at right angles to $C'\ D'$. Its outline is next divided in the same manner as the profile at ($a$). From points on the miter line $C'\ A'$, projectors are drawn parallel to $C'\ D'$. These projectors are intersected by corresponding lines drawn at right angles to $C'\ D'$ from the profile at ($c$). A line traced through the points of intersection, as shown at ($d$), then defines the required raked profile.

The pattern for the raked molding may now be laid off by means of the stretchout $M'\ N'$, which is developed from the profile at ($d$). The completion of the pattern is fully shown in Fig. 48.



Digitized by Google

PROBLEM 13.

**22. To develop the patterns for a raking bracket.**

EXPLANATION.—As the student has already seen in *Architectural Proportion*, modillions and brackets that are used on the raking moldings of pediments and gable cornices are made with their sides in a vertical plane. When the moldings of a horizontal cornice are used for the inclined moldings of a gable, the height of the several members—that is, the dimensions measured at right angles to the edge lines of the molding—is, of course, the same in both cases.

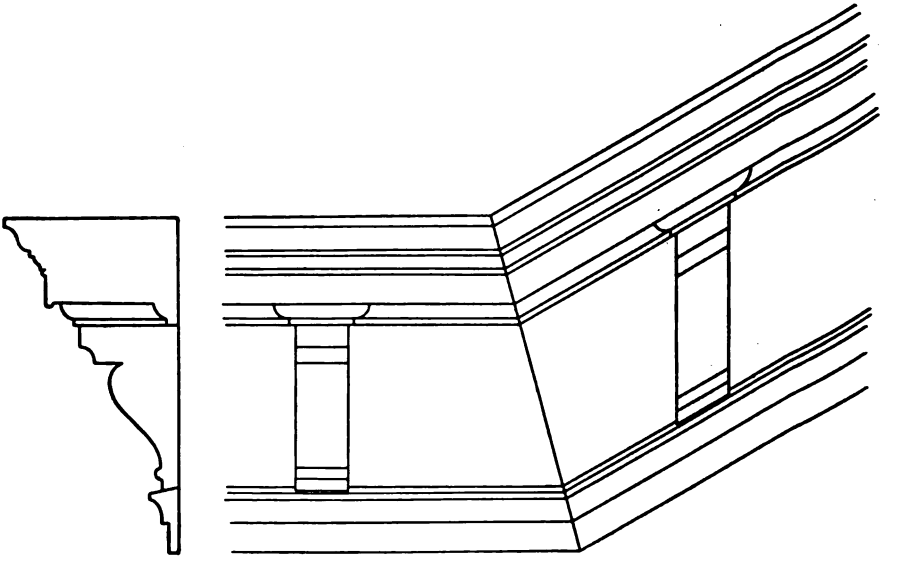

FIG. 49.

If the modillions in the oblique cornice are placed vertically, therefore, the height of their sides will be greater than that of the corresponding modillions, or brackets, in the horizontal moldings. Brackets so designed are called **raking brackets**, and while their sides are increased in height, the edge lines of their face moldings remain parallel to those of the oblique cornice.

Digitized by Google

The patterns of the moldings that form the faces of the raking brackets may thus be seen to be merely butt miters, of which the outline of the bracket in the horizontal cornice is the profile, while the sides of the raking brackets are the miter planes. Fig. 49 shows an elevation of a horizontal cornice containing a bracket whose profile is shown at the left. Joining this at the right, by means of a regular face miter, is the foot of a gable cornice on which is represented the front view of a raking bracket.

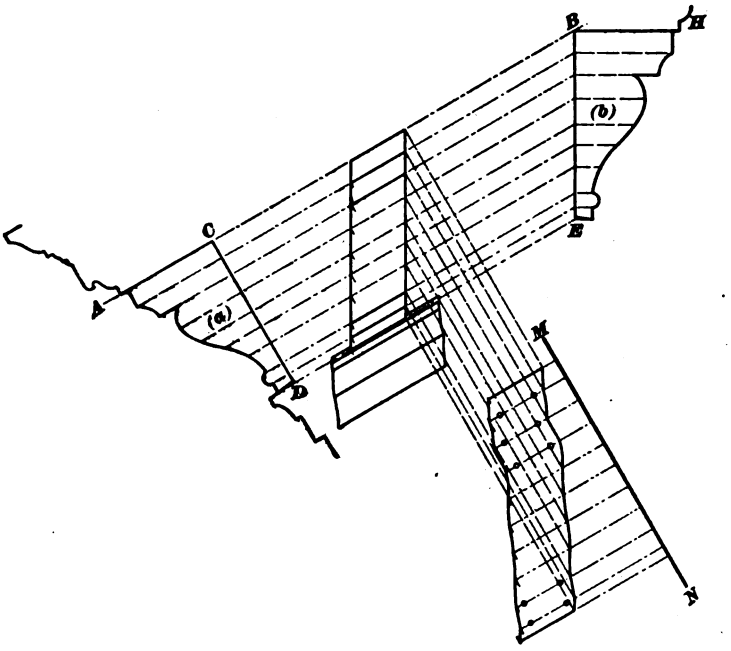


FIG. 50.

CONSTRUCTION.—In making the detail drawing from which to obtain the patterns of the raking bracket, the oblique line *A B* in Fig. 50 is first drawn at the required pitch. Next, from any convenient point, as *C*, a line *C D* should be drawn at right angles to *A B* to represent the vertical line at the back of the bracket in the horizontal cornice. The required height of the bracket is then set off on this

Digitized by Google

line and the drawing of the bracket side is completed in the manner shown in Fig. 50. Next, a line $DE$ is drawn parallel to $AB$ to represent the bottom line of the frieze. Now, conveniently close to $CD$, two vertical parallels are drawn, the perpendicular distance between which is the same as the face width of the normal bracket. Projectors parallel to $AB$ are next drawn from the several edges and interedges of the bracket profile at ($a$), in the manner shown in Fig. 50. This, it will be seen, completes the front elevation of the raking bracket, exclusive of the moldings that form the bracket head.

To obtain the pattern for the face of the raking bracket, the stretchout $MN$ is developed, in the position shown in Fig. 50, from the profile of the normal bracket at ($a$). After edge and interedge lines have been drawn, developers from the intersections in the elevation will complete the construction.

To obtain the pattern for the side of the raking bracket, the vertical line $BE$ is drawn, as shown, at a convenient distance from the bracket face. The projectors used to represent the edges and interedges of the bracket are then produced until they intersect the line $BE$, as shown. From points of intersection thus obtained on $BE$, horizontal lines are next drawn indefinitely toward the right. The lengths of the several lines drawn across the normal profile at ($a$) may now be taken in the dividers and set off on corresponding horizontals in the upper view at ($b$). The outline of the raked profile may then be traced through the points thus determined, as shown in ($b$), Fig. 50.

It will be understood by the student that in case it becomes necessary to obtain the outline for the brackets of a horizontal cornice from the profile of a raking bracket, the necessary operations would be performed in the reverse order from that just described. If, however, a situation should be encountered in which only raking brackets were needed, it is quite as necessary that a normal profile should be constructed, since it is from this view that the stretchout for the raking bracket is developed. The normal profile is

Digitized by Google

necessary, also, for use as a stay when the faces of the raking brackets are formed.

It should be noted that, of the three pieces of molding that form the head of the bracket—in cases where the bed molding of the cornice is used to finish the upper portion of the bracket—the front piece only has the same profile as the bed mold. The profiles for the returns on each side of the bracket are determined by the method used to obtain the profiles for the returns at the top of a broken pediment, as explained in Problem 10. The operation of raking these

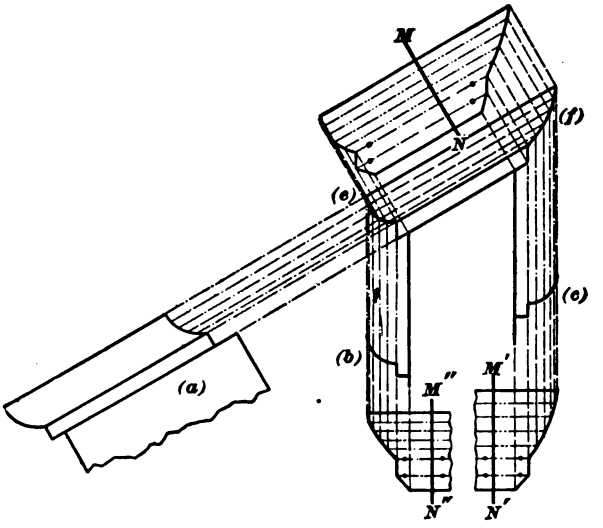


FIG. 51.

profiles and of developing the patterns for the returns is shown in Fig. 51. This drawing represents the upper portion of the bracket on a scale somewhat larger than that used for Fig. 50. Duplicates of the normal profile are placed in an erect position either above or below the bracket head, as shown at (*b*) and (*c*). The outlines of these profiles, together with the profile of the bed molding at (*a*), are then divided into the same number of equal spaces. From the points thus located in (*a*), edge and interedge lines of

Digitized by Google

indefinite length are drawn parallel to the inclined molding. These lines are next intersected by vertical lines drawn from corresponding points in (*b*) and (*c*). The raked profiles may then be indicated on the drawing by irregular curves traced through the points thus determined, as shown at (*e*) and (*f*). The stretchout *M N* is next developed from the profile at (*a*), and developers from (*e*) and (*f*) will complete the pattern for the front molding, as shown in Fig. 51.

To obtain the patterns for the returns, each of the raked profiles must be considered as a normal profile, and plain square miters developed therefrom. When the stretchout of (*f*) is developed, the spaces between the points previously obtained must be transferred separately to *M' N'*, or, if desired, the profile may be redivided into equal spaces. The same process must be followed with respect to the profile (*e*), the pattern for which is shown on the stretchout *M'' N''*, Fig. 51.

---

PROBLEM 14.

**23. To develop the patterns for an oblique molding that miters against an irregularly shaped pier.**

EXPLANATION.—The oblique moldings of gables sometimes terminate at the foot against columns or molded piers that rise above the gable, as in Fig. 52. The details of the molding and of the pier are usually given in drawings furnished by the architect, and from such details a view similar to that shown in Fig. 53 must be constructed by the pattern draftsman.

CONSTRUCTION.—Since the inclination of the gable molding can be shown only in an elevation and the profile of the pier can be represented only in a plan, it is evident that both views will be required. The plan of the pier or the column should first be drawn as shown in Fig. 53. Next, a profile of the gable molding should be drawn in the plan, as shown at (*a*), with its vertical side against the wall. The plan is then completed by the projection

Digitized by Google

of the necessary edge and interedge lines drawn parallel to the wall line and produced until they intersect the side of the pier.

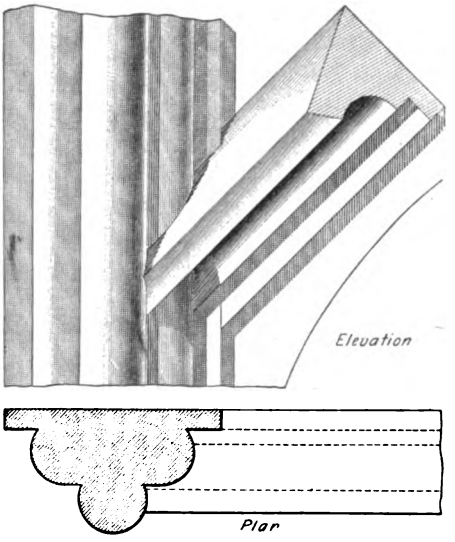


FIG 52.

The several edges and angles of the pier in the plan are now projected to the elevation, and in this view the line $A\,B$ to represent the lowest edge line of the inclined molding is then drawn at the required angle. Next, against any line, as $B\,C$, drawn at right angles to $A\,B$, the normal profile is copied from ($a$) to the position shown at ($b$). Lines drawn from the several edges and interedges at ($b$) and parallel to $A\,B$ will complete the elevation with the exception of the correct view of the miter line. This line is determined by projectors drawn to the elevation from the plan, and from points on the pier in the latter view, at the intersection of the horizontal projectors drawn from the view at ($a$). The correct view of the miter line is then traced in the elevation through the intersections of corresponding projectors. This foreshortened view of the miter line is represented by $A\,E\,D$, Fig. 53, and should be understood by the student from instruction given in preceding problems. The stretchout of the molding may now be set off in the usual manner on $M\,N$, and edge and interedge lines for the development drawn as usual. Developers from the several points of intersection in $A\,E\,D$ carried to corresponding edge lines in the development will complete the pattern.

Since the plan shows that the roof and the upper fillet of the molding must intersect the curved outline of the pier,

Digitized by Google

it will be noticed from Fig. 53 that these members must be divided by interedges in the same manner as the outline of

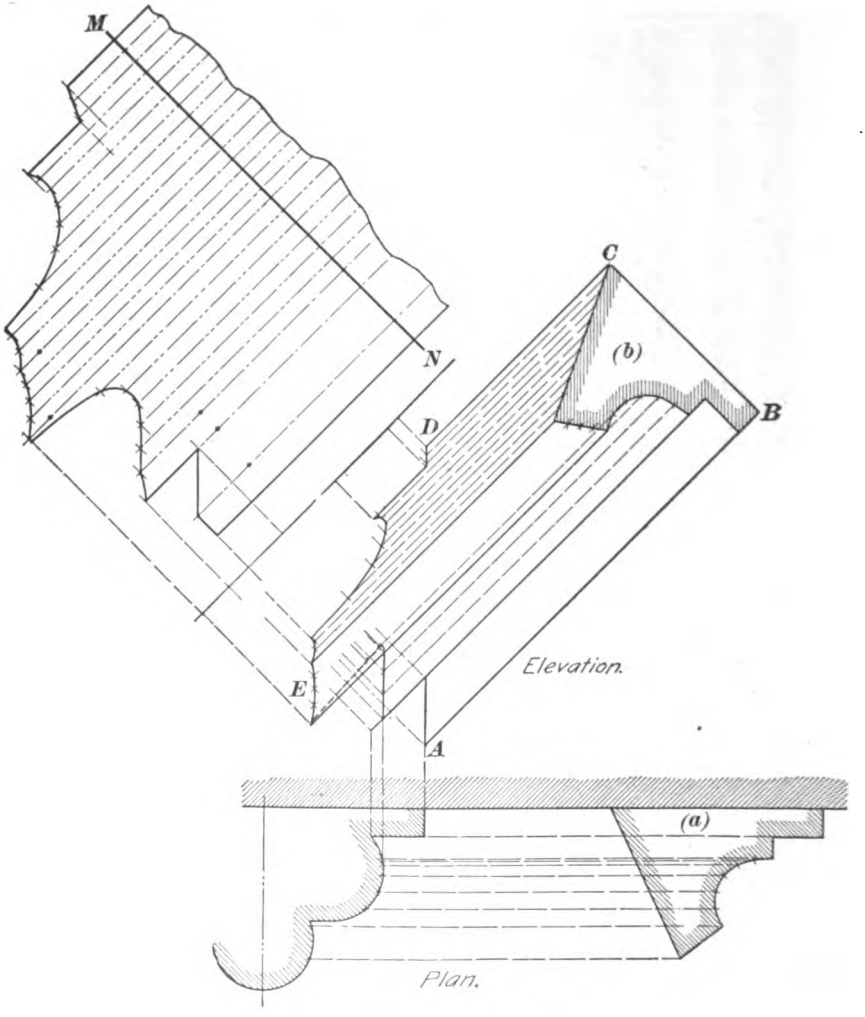


FIG. 53.

curved members. The entire process is shown in Fig. 53, and the student should have little difficulty in following the construction.

Digitized by Google

PROBLEM 15.

**24. To develop the patterns for a gable molding that miters against a wash.**

EXPLANATION.—When a pediment is designed to surmount a horizontal cornice, the moldings of the gable are usually made to miter on the wash, or sloping roof, of the main cornice. Since the elevation of the gable is the only view in which the true lengths of the edge lines are shown, the pattern must, of course, be developed from that view. However, since the termination of the edge lines is governed by the pitch of the wash, which can be shown only in a vertical sectional view, it is apparent that these two views must be drawn before a correct elevation of the miter can be shown or the pattern developed.

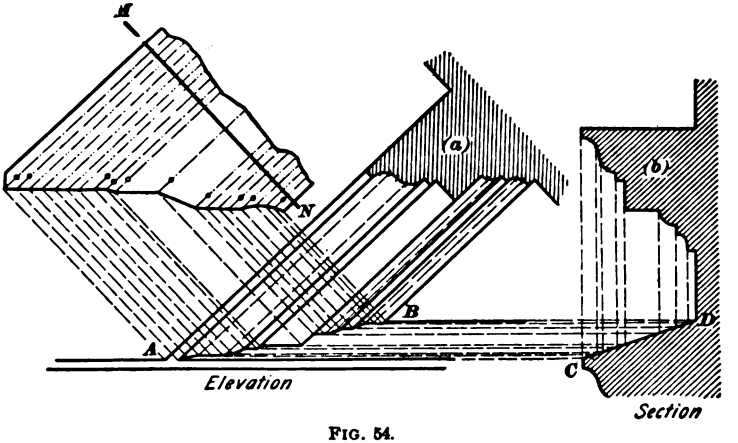


FIG. 54.

CONSTRUCTION.—The pitch of the gable should first be established and the profile of the moldings so placed that the edge lines shall be parallel to the pitch of the gable, as shown at (*a*), Fig. 54. From the several edges and interedges of the profile, projectors parallel to the molding are drawn toward the roof of the horizontal cornice. The vertical sectional view already referred to is next constructed by first drawing a duplicate of the profile at (*a*) in the position shown at (*b*). Next, immediately below (*b*), the slope

Digitized by Google

of the wash is represented by the line *C D*. From all the edges and interedges of the profile at (*b*), projectors are drawn to the wash *C D*. Now, from the points of intersection on *C D*, horizontal lines are drawn to the elevation to intersect edge lines from corresponding points on the profile at (*a*). A line traced through the points of intersection, as shown from *A* to *B*, will complete the elevation of the miter.

To develop the pattern, the stretchout *M N* is drawn at right angles to the pitch of the gable and spaced off in the usual manner from the profile at (*a*). Developers drawn from the several points of intersection previously obtained in *A B* to corresponding edge lines in the development will complete the pattern.

---

PROBLEM 16.

**25. To develop the patterns for the return cornices of a dormer that miter against an octagonal roof.**

EXPLANATION.—The elevations and plan of a dormer that miters against an octagon tower is shown in Fig. 55. It will be seen from this illustration that the returns of the cornice miter against the oblique sides of the octagonal roof. The surface against which the returns miter is therefore obliquely inclined with reference to the plan and elevation shown in Fig. 55.

When the working drawings for such a construction are to be made by the pattern draftsman, unusual care must be exercised in order that the position of the several lines that represent the roof are in correct relative positions with reference to the moldings of the dormer. This condition must be ascertained by careful measurements taken either from the building itself or from the architect's drawings. The length of the return molding depends, of course, on the slant of the roof and on the projection of the face of the dormer from the base of the roof. It is necessary, also, to ascertain the exact position of the hip line and to see that it is correctly represented in the plan, since it is from this view

Digitized by Google

that the pattern must be developed. In all cases where possible, it is best, of course, to construct full-size working drawings, but when the work is very large and it is inconvenient to construct full-size drawings, correct measure-

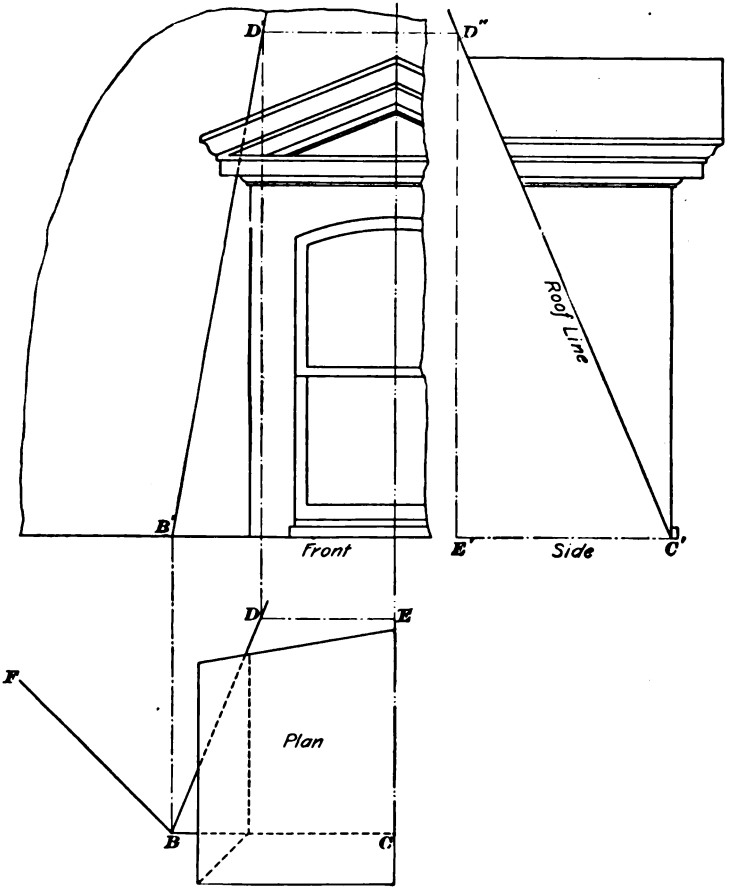


FIG. 55.

ments may be obtained from a drawing made to any convenient scale—say, one-half or one-quarter the full size of the design. The actual patterns for the miter, however, must, in every case, be developed from full-size details.

Digitized by Google

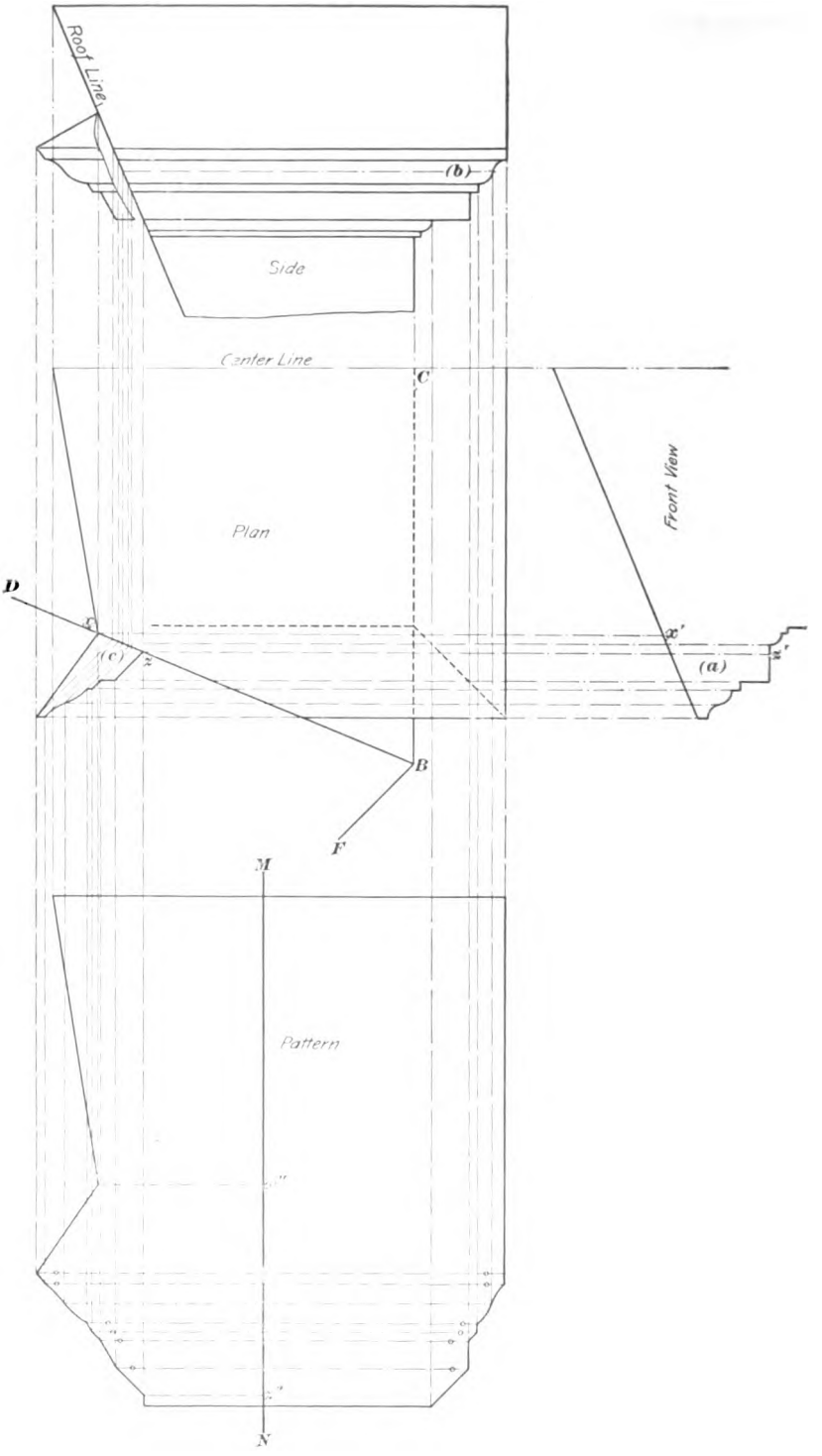


FIG. 56.

Digitized by Google

CONSTRUCTION.—The first thing to be ascertained is the position of the hip line of the roof and its relation to the returns; in other words, we must first find out what portion of the profile of the return is to be mitered against the front side of the roof and what portion against the oblique side. The front and the side elevation of the dormer are first to be drawn as in Fig. 55, being careful to show, in the side view, the correct relation of the roof line, as already stated. The plan is next drawn below the front elevation, as shown. In this view, the lines that represent the front and the side of the dormer and also the lines that represent the outer projection of the dormer cornice must be shown. When the side elevation is drawn, the moldings of the cornice may be represented, for the present, as finishing against the roof line, as in Fig. 55. In the plan, the ridge of the dormer roof and the eave lines may be represented the same length as corresponding lines in the side elevation. Next, the base line of the front side of the octagonal roof may be represented in the plan as shown by $BC$. In Fig. 55, the front of the dormer is shown flush with the base line of the roof, but it should be understood that dormers are often placed either above or below the base line, in which case the line of the roof must be represented accordingly. The line $BF$ is then drawn in the plan at the correct octagon angle to represent the oblique side of the roof. The angle $CBF$ is now bisected, and the line of the hip is represented in the plan by $BD$. Since, as already stated, the pattern is to be developed from the plan, the position of the hip line need not necessarily be shown in the front elevation. In this case, however, the student may complete both views as shown in Fig. 55, since he will then better understand the drawing.

Those portions of Fig. 55 that are necessary in obtaining the pattern are shown somewhat enlarged in Fig. 56. The side view in this illustration is an enlarged copy of the corresponding portion of Fig. 55. The plan of the dormer is shown immediately below—in this case, turned so that projectors from corresponding positions in the elevations may

Digitized by Google

be drawn between the two views. The front elevation is shown at the right, and on a center line common to the plan.

Thus far we have represented the dormer as if its moldings were mitered entirely against one face of the tower roof. It is known, however, that the upper portion of the cornice profile extends beyond the hip line, and, consequently, it must miter against the oblique side of the roof. It is apparent from the drawings that the hip line of the roof intersects the cornice profile at a point on its planceer.

It is first necessary to set off into the same number of equal spaces the curved portions of the crown moldings shown in profile at (*a*) and (*b*), Fig. 56. Projectors parallel to the lines of the molding are next drawn from the points of (*b*) to their intersections with the roof line, as shown. Next, from the several points of intersection on the roof line, the projectors are produced until they intersect the hip line *B D* in the plan. From points thus obtained on *B D*, lines of indefinite length are next drawn parallel to *B F*. These lines are intersected, as shown in Fig. 56, by projectors drawn from corresponding points in the profile at (*a*). A line traced through the points of intersection, as shown at (*c*), will represent a correct view of the miter.

To obtain the pattern, the stretchout *M N* is next set off in the usual manner. If desired, the roof surface of the dormer may be added to the stretchout, as shown in Fig. 56. From the points *x* and *z*, where the hip line cuts the roof and the planceer, lines must be carried back to the profile in the manner shown, and their positions must be indicated on the stretchout *M N*. Developers drawn from the points of intersection at (*c*) and from the profile at (*b*) will complete the pattern as shown in Fig. 56.

The pattern for the bed molding that miters against the front side of the roof must be obtained by the process given in Problem 3.

The side elevation in Fig. 56 shows a correct view of the molding as it will appear when finished. The student will

Digitized by Google

understand, however, that, so far as the pattern draftsman is concerned, the completion of this view is unnecessary. The process is shown in Fig. 56 as an aid to students that desire to complete their projection drawings.

---

PROBLEM 17.

**26. To develop the patterns for a miter between a molding and a sphere, or ball.**

EXPLANATION.—It is sometimes necessary to terminate a molding against a ball. For example, a half ball may be placed between the arms of a miter in a ceiling panel; or, again, a complete ball may be used to form the finish at the lower extremities of a gable cornice. When the details for such constructions are required, the draftsman must be careful to locate the center of the ball in a correct position with reference to the lines of the molding.

CONSTRUCTION.—It is first necessary to draw a profile of the required molding, correctly placed with reference to the wall line, as shown at (*a*), Fig. 57. From its several edges and interedges, projectors of indefinite length are drawn to the elevation, as shown at the right. The center of the ball may next be conveniently located at a point $x$ on the wall line. From the point $x$, a line of indefinite length should be drawn through the elevation, and the outline of the ball described in that view from a center conveniently chosen at $x'$.

A profile of the molding should now be represented in the plan, as shown at (*b*). The point $x'$ of the elevation is shown in Fig. 57 projected to the plan at $x''$, from which point as a center the outline of the ball is next to be described. As in the elevation, edge and interedge lines from the profile at (*b*) are drawn parallel to the wall line and produced until they intersect the outline of the ball in the plan. The foreshortened view of the miter line is produced in the elevation by projectors carried from points in the plan at the

Digitized by Google

intersection of the edge lines there shown. These projectors are extended until they intersect in the elevation the

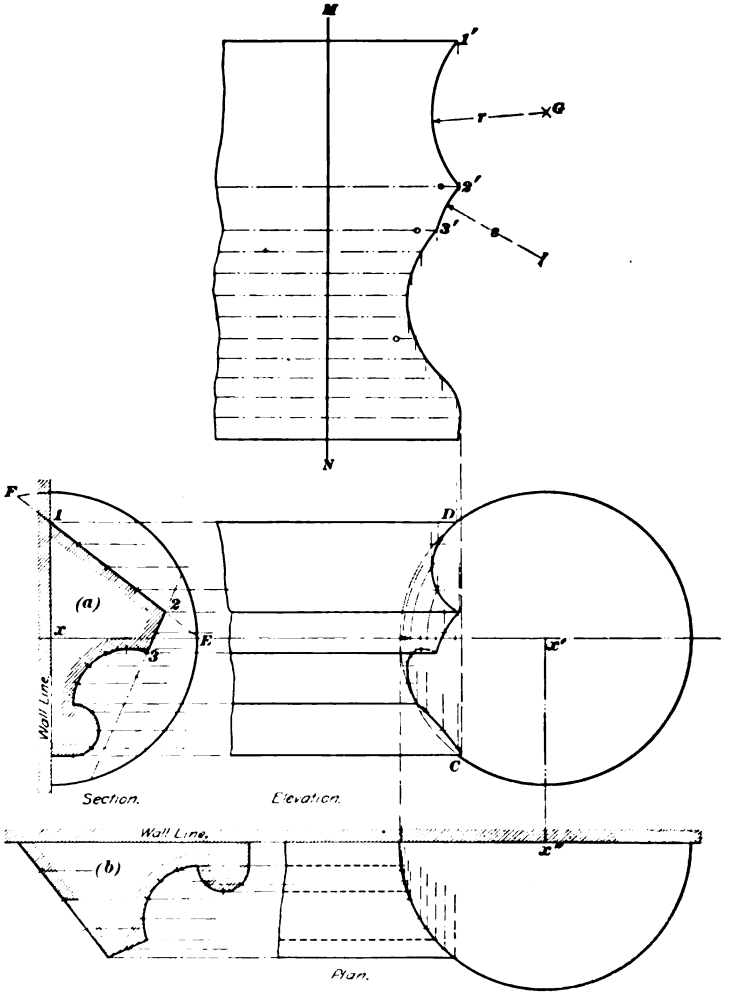


FIG. 57.

horizontal line drawn through $x'$. By the aid of the compasses, and from $x'$ as a center, the projectors from the plan are carried from points at their intersection with $x$–$x'$ to

Digitized by Google

corresponding edge lines of the elevation. A line traced through the points of intersection thus determined, as shown from *C* to *D*, Fig. 57, will give a correct elevation of the miter.

The stretchout *M N* is developed in the usual way from the profile at (*a*), and the pattern is completed by developers drawn from the several points of intersection in *C D*.

Since any section of a sphere is a circle, the portions of the pattern between *1* and *2* and between *2* and *3*, which represent the straight lines of the profile, may be described by the compasses. To find the radius *r* with which to describe that portion of the pattern between *1* and *2*, the line *1–2* of the profile is extended in both directions until it cuts the outline of the ball at *E* and *F*. One-half of *E F* will then be the required radius. To describe this arc in the pattern, short intersecting arcs are described from *1'* and *2'* as centers, with a radius *r*. From *G*, the point of intersection of these arcs, and with the same radius, the pattern outline may be described as shown. The radius *s* is found in a similar manner by extending *2–3* of the profile until it cuts the outline of the ball as shown in Fig. 57.

---

PROBLEM 18.

**27. To develop the patterns for a miter between a mansard hip molding and a deck cornice.**

EXPLANATION.—A mansard roof is usually finished at the upper edge, where it joins the deck, with a series of moldings commonly termed **deck cornices.** An apron, or wide fascia, inclined at the angle of the roof, is usually added to the moldings of the deck cornice, and serves as a finishing strip for the shingles or slate of the roof. This apron, instead of being mitered at the angles of the roof, is generally carried along the hip, thus forming a border to the roof. A roll is usually formed in this strip at the angle of the hip and is mitered at its upper end with certain members of the deck cornice. In order to facilitate this miter, the profile of the deck cornice usually contains a quarter-round member



Digitized by Google

that receives the hip mold. It will be seen from the construction of the drawing that the principles involved may be applied to any profile whose moldings are similarly inclined.

In the drawings shown in Fig. 58, the profile for the bed molding contains a quarter-round member whose outline is described with the same radius used to describe the roll of the hip molding.

CONSTRUCTION.—In Fig. 59, the line $A\ B$, which represents the pitch of the roof, is taken from the section in Fig. 58, and may be assumed to represent the surface of the sheathing boards of the roof, while a horizontal line $A\ C$ is drawn to represent the lower edge of the roof. A plan of the hip is to be drawn in the position shown by the right

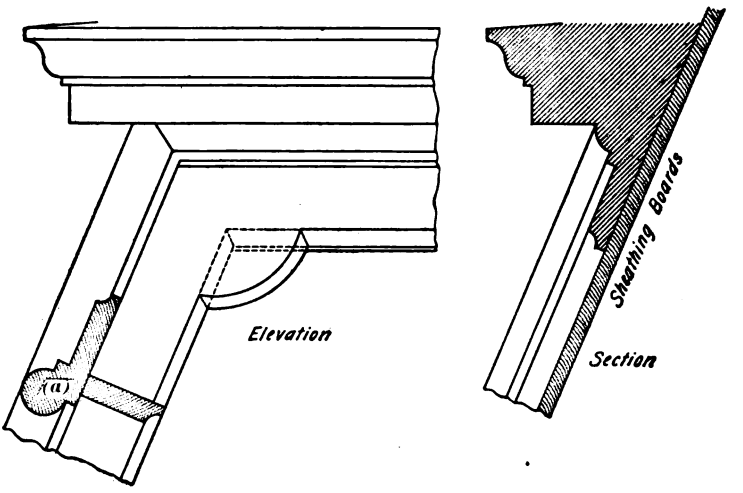


FIG. 58.

angle $D\ A'\ C'$ and its bisector $A'\ B'$. A sectional view on the line $A'\ B'$—that is, through the hip of the roof—may now be projected at right angles to $A'\ B'$, as shown on the left in Fig. 59. In this view, $A''\ B''$ represents the line $A\ C$ of the elevation, while $B''\ B'''$ is made equal to $B\ C$. The line $A''\ B'''$ will then represent the true edge of the hip, and

Digitized by Google

parallel to this line may be drawn a view that will show the true lengths of the edge lines in the hip molding.

Before the profile of the hip molding can be drawn, however, it is first necessary to obtain a correct view of a section through the roof at right angles to the hip line. To obtain this view, the line $EF$ is drawn perpendicular to $A''B'''$, as shown in Fig. 59. Through $F$, the point of

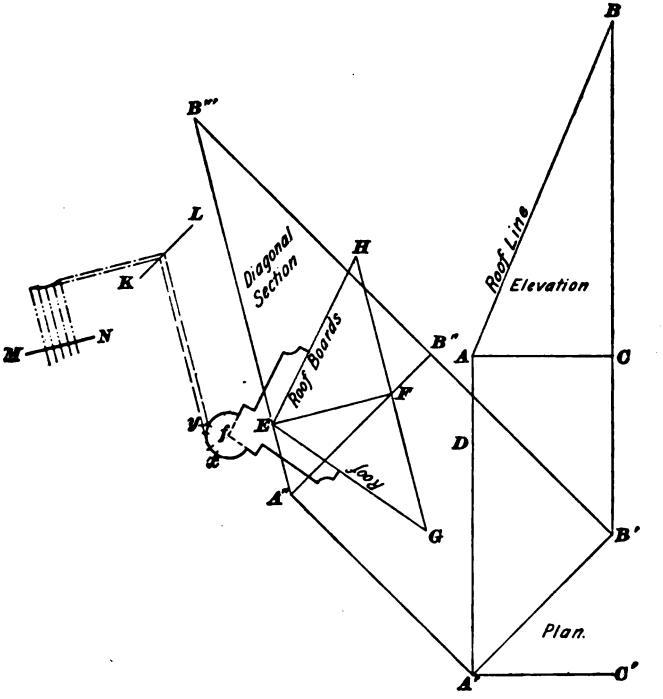


FIG. 59.

intersection with $A''B''$, $HG$ is drawn parallel to $A''B'''$, while the distances $FG$ and $FH$ are each made equal to the distance $FA''$. The lines $EH$ and $EG$ will then define the angle $GEH$, which is the correct angle of the hip.

The profile of the hip molding may now be drawn in Fig. 59 by aid of the profile at ($a$), Fig. 58. In this view, the radius of the hip roll is the same as that of the

Digitized by Google

quarter-round molding in the profile of the deck cornice, while the width of the fascias correspond with that member in the deck molding. Next, from $f$, the center of the profile of the hip roll, lines are to be drawn at right angles to $E\,G$ and $E\,H$, cutting the circumference of the hip roll at $x$ and $y$ and thus defining the quarter circles, which are to be mitered with the corresponding members of the deck molding. That portion of the hip roll between $x$ and $y$, as will be seen from Fig. 59, projects above the quarter round of the deck molding and miters against the planceer.

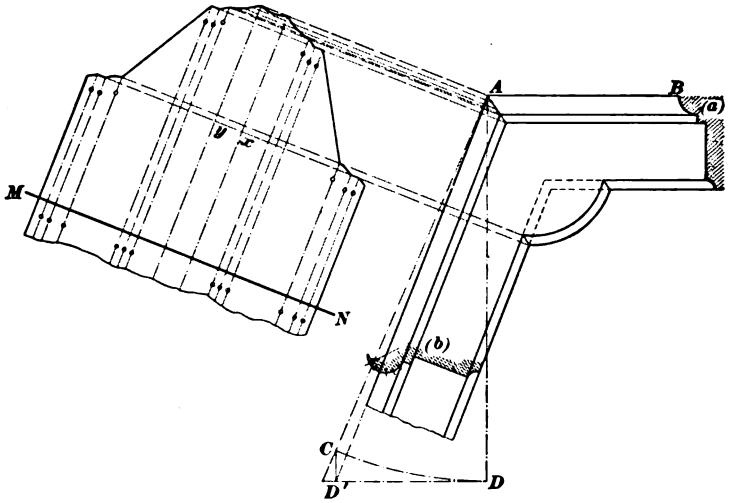


FIG. 60.

To obtain the miter for the portion $x\,y$, the line $K\,L$ is drawn parallel to $A''\,B''$ to represent the horizontal plane of the planceer. A series of edge lines may then be drawn from the profile parallel to $A''\,B'''$ and the miter obtained by the method of Problem 3.

Before the miter between the other portion of the hip molding and the bed molding can be developed, a drawing must be constructed to show the true lengths of the edge lines in both arms of the miter. The elevation shown in

Digitized by Google

Fig. 58 gives the true lengths of the edge lines of the bed molding, but not those of the hip molding, for the reason that the surface of the roof is inclined in that view. It is obvious, also, that the angle of the miter there shown is not the true angle.

A drawing must now be constructed in which the true lengths of the edge lines of both arms of the miter will be shown. This is accomplished by drawing the horizontal line $A\,B$ in Fig. 60 and making $A\,C$ represent the pitch of the roof, as in Fig. 58. The line $A\,D$ is next drawn at right angles to $A\,B$. The distance from any point on the line $A\,C$, as $C$, to the point $A$ is measured and an equal space set off on $A\,D$. A horizontal line of indefinite length is drawn through $D$, and this is intersected at the point $D'$ with a vertical from $C$. The line $A\,D'$ is next drawn, and the angle $B\,A\,D'$ is the required angle of the miter. The true view of the miter may now be represented by placing the profiles in the positions shown at ($a$) and ($b$) and drawing edge and interedge lines parallel to the sides of the angle, as in Fig. 60. The development of the patterns is now completed by processes already known to the student. Since the work is fully shown in Fig. 60, further description is unnecessary.

It is sometimes desirable to finish a miter of this sort by a corner piece of suitable outline. This may be added as shown in the illustration.

---

PROBLEM 19.

**28. To develop the patterns of a gore piece used to effect a transition between a square base and an octagonal shaft.**

EXPLANATION.—When a shaft that is octagonal in plan is placed on a square base, a corner piece is required to complete the transition between the two solids. This wedge-shaped transition piece is in the form of a gore whose inner

Digitized by Google

edge is equal in length to the oblique side of the octagon and tapers to a point at one of the angles of the square base. The gore piece is sometimes part of a wash, but is occasionally formed in the molded portions of the design.

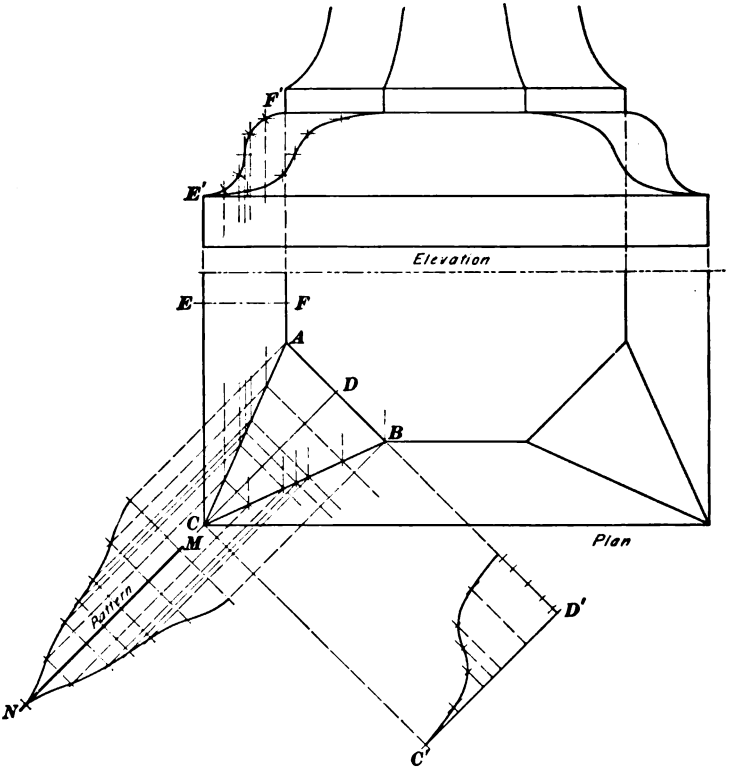


FIG. 61.

An elevation and a plan of the lower part of an octagonal shaft that stands on a square base is shown in Fig. 61. In this case the transition from the octagon to the square takes place in one of the molded members of the profile.

CONSTRUCTION.—The half plan of the base is first drawn. In this view, the half square and the half octagon must be

Digitized by Google

drawn in the correct relation, and the elevation must be projected therefrom in accordance with the desired profile. From the angles of the octagon in the plan at $A$ and $B$, lines drawn to the adjacent angle $C$ of the square base will define the outline of the gore piece in that view. The profile of the sides may be taken from the elevation, but it will be seen that the profile of the gore piece must be laid off by some process of projection. This is true for the reason that $C\,D$, its center line, is much longer than $E\,F$, the line that represents the width of the corresponding member in the profile. To project this profile, the curve $E'\,F'$ of the elevation is divided into any convenient number of equal spaces and projectors are drawn from these points to the plan. These projectors are extended until they intersect the miter line $A\,C$; from this line they are continued parallel to $A\,B$ past their intersections with $B\,C$ and produced an indefinite distance beyond, as shown in Fig. 61. Across these projectors, and at right angles thereto, $C'\,D'$ is then drawn. On each of the lines crossing $C'\,D'$, the height of corresponding positions is taken from the elevation and set off in the manner shown. The irregular curve traced through the points thus obtained is the required profile of the gore piece.

To develop its pattern, a stretchout of the profile just found is set off on $M\,N$, which is the line $C\,D$ produced, as shown. Developers drawn from the points of intersection on $A\,C$ and $B\,C$ to corresponding edge lines of the development will complete the required pattern.

The pattern for that portion of the molding parallel to the sides of the square base is obtained in the usual manner on a stretchout derived from the profile in the elevation and laid off at right angles to the outline of the square.

Should it be desired to project a foreshortened view of the miter line in the elevation, projectors may be carried to that view from the points of intersection on $B\,C$. These projectors are then intersected with horizontals from corresponding positions on the profile and a foreshortened view of the miter traced between the points thus found.

Digitized by Google

PROBLEM 20.

**29. To develop the patterns for a bay-window soffit.**

EXPLANATION.—The under surfaces of bay, or oriel, windows are sometimes finished by a series of tapering moldings mitered together and against the wall of the building, as shown in Fig. 62. In this illustration, a plan and an elevation are given; here, the lines resemble a half view of an octagon. The octagonal figure, however, is somewhat

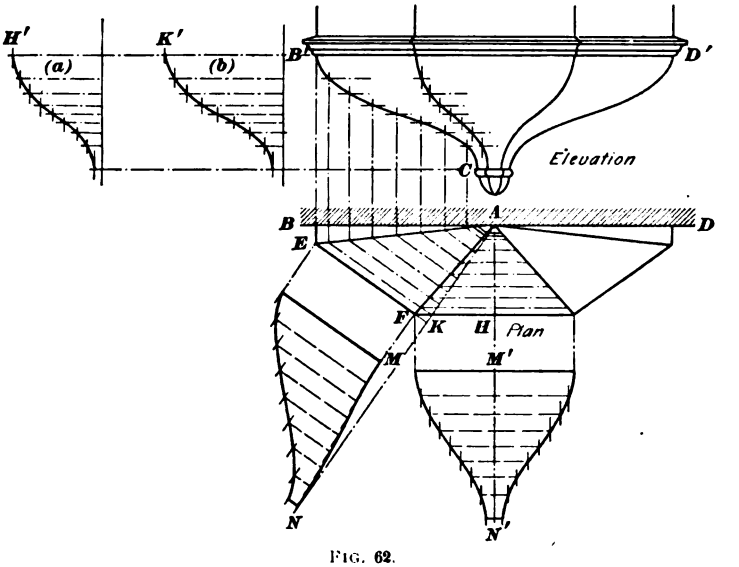


FIG. 62.

irregular, and as a result the returns, the oblique sides, and the front have different projections when measured in the plan on lines perpendicular to their respective edge lines. The profile that appears in the elevation and constitutes the principal outline of the design is that of the returns. The outline of the oblique sides and of the front must be derived from this profile by regular projection methods.

CONSTRUCTION.—Below an elevation in which the correct normal profile is shown, a plan must be drawn on the line *B D*. This view must represent the projection from the wall and show the widths of the front, the oblique sides,

Digitized by Google

and the returns. Lines drawn from the vertices of the angles thus obtained at $E$ and $F$ to the point $A$ will represent, in this view, the miter lines between the different pieces of the soffit. Since $B'C$ is the correct profile for the returns only, it is necessary to construct true sectional views of the oblique side and the front before a stretchout for those pieces can be obtained. The profile $B'C$ is therefore divided into any convenient number of equal spaces, and from the edges and interedges thus indicated, projectors are drawn to the plan until they intersect the miter line $EA$. From the intersections of these projectors with the miter line $EA$, other projectors parallel to $EF$ are drawn to the miter line $AF$; thence, similar projectors are drawn parallel to $FH$ until they intersect the center line of the plan. The projectors on the oblique side are next extended until they intersect a line $AK$ drawn at right angles to $EF$.

Sectional views on the lines $AH$ and $AK$ must now be constructed as shown at ($a$) and ($b$), Fig. 62. To produce the profiles there shown, horizontal projectors of indefinite length are first drawn from the several interedges on $B'C$. In two convenient positions, perpendiculars to these projectors are erected as shown in the illustration. The perpendicular distances between the point $A$ and the several edge and interedge lines of the plan are then taken in the dividers and set off on corresponding horizontals at the left of the elevation; the spaces in each case, of course, are set off from the perpendiculars previously drawn. The profile at ($a$) then represents the distances on $AH$, and the profile at ($b$), the distances on $AK$. If desired, the profiles of the sections may be traced through the points thus determined.

The pattern for the oblique side may now be developed on the stretchout $MN$, from the profile obtained at($b$), as shown in Fig. 62. The pattern for the front of the soffit is obtained in a similar manner from the corresponding profile at ($a$), on a stretchout $M'N'$ developed along the center line of the drawing. The pattern for the return portion of the soffit is developed, of course, from the normal profile, on a stretchout laid off at right angles to the edge lines on the

Digitized by Google

plan. The pattern is that of an ordinary miter, and, therefore, is not shown in Fig. 62.

In many cases of bay-window construction, the details are such that the normal profile is given for the front of the bay window. This is especially the case when the architect's drawings include a vertical section through the center line of the elevation. The student should understand, however, that in such cases the operations are performed in a reverse order from that given in this problem.

---

## INVOLVED MITERS.

**30.** When a cornice of wide projection is to be placed on a building whose walls contain both exterior and interior angles, it is frequently found that the several miter lines intersect one another in such a manner as to puzzle the novice when he attempts to lay out the patterns for the moldings. When the miter line for any intersection of moldings is interfered with or crossed by the miter line of another intersection, it is usual to develop the patterns for those members nearest the wall in accordance with the regular miter line and to define a new miter line for those members of the molding that project beyond the point of intersection. Miters of this kind are termed, by cornice makers, *involved miters*.

The method used to complete the preliminary projection drawings for miters of this nature may be understood by an inspection of Fig. 63. This illustration represents a partial view of a plan in which two exterior and two interior angles are shown close together. The wall line of the building is represented by the heavily shaded line in the upper portion of the figure. The exterior angles are shown at $E$ and $H$, and the interior angles at $F$ and $G$. The profile of the molding is shown in its proper position at ($a$). The miter lines are, of course, defined in the usual manner by bisecting the angles of the wall. It is found, when the angle at $H$ is bisected, that the miter line can be represented in

Digitized by Google

the usual manner; that is, it may be produced without meeting any other miter line until it intersects the outer line of the molding. When the angles at $F$ and $G$ are bisected, however, the miter lines are found to intersect at a point $J$. Since this is obviously some distance from the outer projection of the molding, some means must be found by which those members beyond the point $J$ shall be mitered. In this case, the desired result will be attained if the wall lines $EF$ and $GH$ are produced to their intersection at the point $X$ and the angle formed at $X$ bisected in

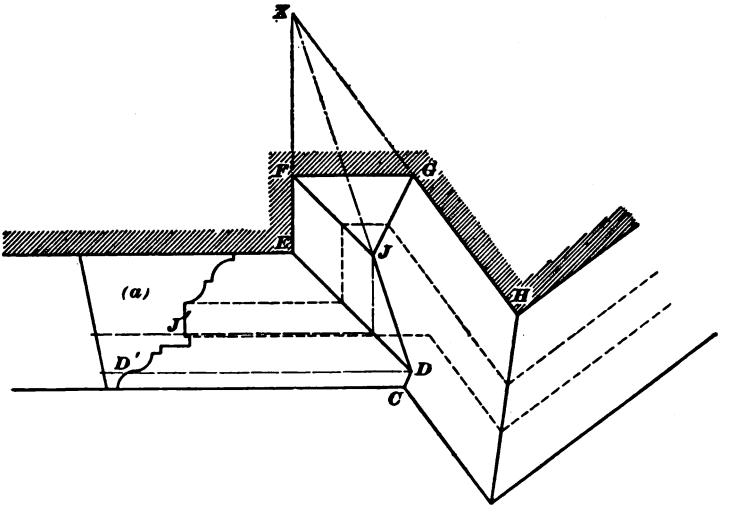


FIG. 63.

the usual manner, as shown by $XJ$ produced. Further difficulty, however, is here encountered, since the bisector of the angle at $E$ intersects at $D$ the bisector of the angle $X$. The remaining miter line, in this case, is found by bisecting the outer angle $C$ and drawing $CD$. The points $J$ and $D$ must next be projected in the manner shown in Fig. 63 to the profile at $(a)$, where the positions of the points $J'$ and $D'$ may be located when the stretchout is developed. The pattern construction for the remainder of the development is similar to that already described.

Digitized by Google

**31.** Another method of solving involved miters is sometimes employed when a cornice of wide projection is mitered around an octagonal bay window. A situation of this sort is shown in Fig. 64, where, as before, the wall is represented by a heavily shaded line. The construction just given will result in the miter line for the angle at $F$ being carried to $D$, as shown by the dotted lines in the illustration, where it intersects the miter line from the angle $E$. Thence, the miter line is carried to $B$ in a manner similar to that just

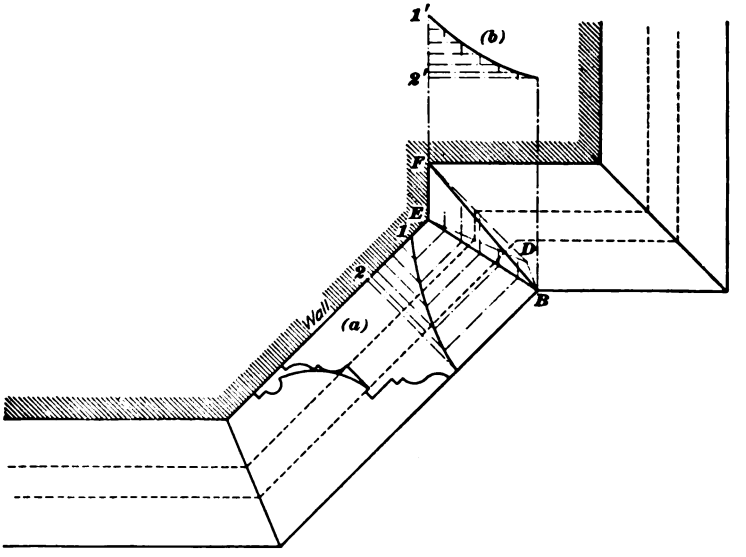


FIG. 64.

described. To avoid a crooked appearance in the miters, arbitrarily drawn miter lines may be indicated between $FB$ and $EB$. When this course is adopted, the draftsman will be compelled to obtain a profile for the piece $EBF$ by the raking process described in Problem 19. Since the methods employed to obtain the raked profile may not be clear to the student, the upper portion of the profile at $(a)$ is shown at $(b)$ changed, or raked, to accommodate the new condition. It will be noticed, by an examination of the drawing, that points are located at convenient distances on the outline of

Digitized by Google

the profile; projectors perpendicular to the wall line are drawn from these points and terminate between *1* and *2* of the plan. Projectors from the profile are also drawn parallel to the wall until they intersect the miter line *E B*. The line *E F* is next extended, as shown, and the view at (*b*) is projected after setting off the points between *1'* and *2'* in positions similar to those shown in the plan. At the discretion of the draftsman, the entire profile may be raked or the portion that includes the moldings may be allowed to miter on the lines *F D*, *E D*, and *B D*, as in the case referred to in Art. **30.**

---

## DRAWING PLATE, TITLE: EXAMINATION PLATE IV.

**32.** This plate is to be drawn by the student on paper the same size as that used for the preceding plates of this Course. The drawings on this plate consist of the details, drawn to a 3-inch scale, of the cornice and the pediment molding, together with certain developments, of the bay window represented on the drawing plate in *Architectural Proportion*. The plate, when completed, is to be sent for correction in the usual manner.

Five miter patterns are to be developed from the detail of the cornice and pediment:

(*a*) A pattern for the rake molding of the pediment.

(*b*) A pattern for the return at the top of the rake molding.

(*c*) A pattern for the square miter in the main cornice.

(*d*) A pattern for the inside miter in the main cornice.

(*e*) A pattern for the miter of the cornice against the brick wall.

The drawing first made should be that of the profile of the main cornice, since that is the view on which the other drawings of the plate depend. This profile may be constructed from measurements taken from the drawing plate

Digitized by Google

## EXAMINATION PLATE IV.

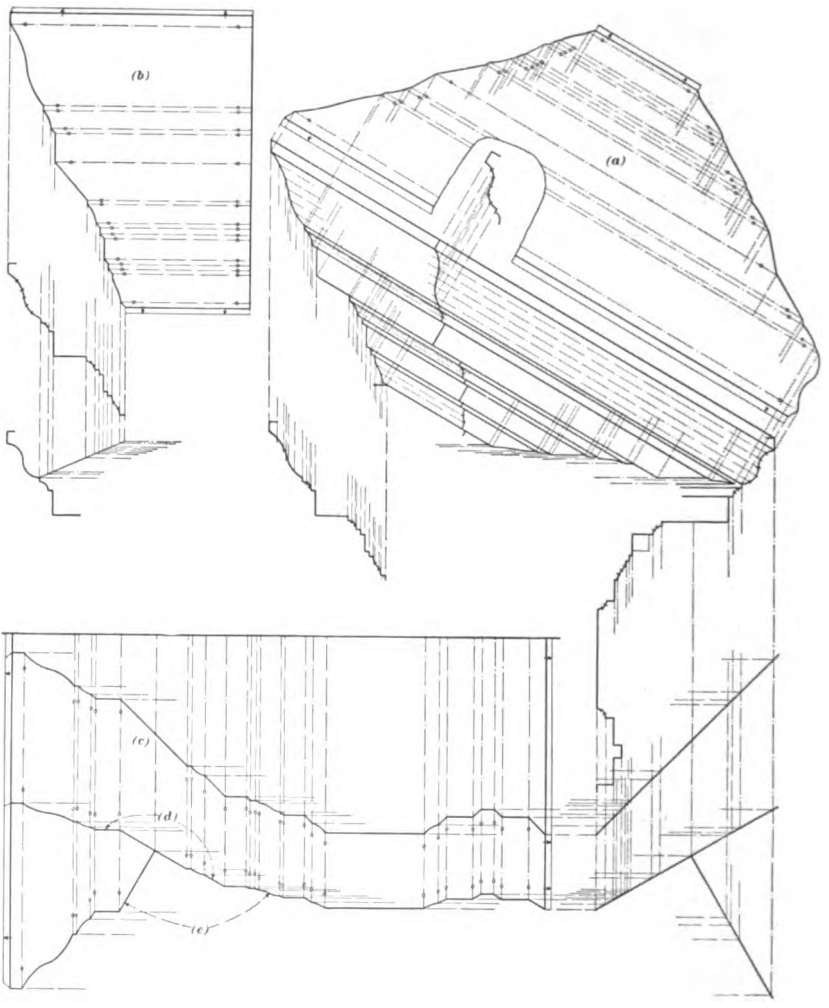


Digitized by Google

of *Architectural Proportion*, and when constructed to the size required for this drawing plate, should show the details of the molding very accurately.

The descriptive lettering heretofore placed in a separate portion of the drawing, may, in this case, be put directly on the patterns, as shown on the reduced copy of this plate. This method is commonly employed by cornice draftsmen to designate on the details the different patterns developed.

From the arrangement of views given on the reduced copy of the drawing plate shown here, the student should be enabled to construct the required drawings without further directions. This plate affords an example of the practical application of the problems contained in this section. Since the drawings represented are those commonly required of the draftsman in a cornice shop, the practice thus obtained should be invaluable to the student.

Digitized by Google

Digitized by Google

# SKYLIGHTS.

## INTRODUCTION.

**1. Situations in Which They Are Used.**—The conditions that govern the construction of buildings in large cities are largely responsible for the great demand for skylights. Entire blocks are built up with no space between the buildings, and, in such cases, some means must be found to provide air and light. These are supplied by shafts capped with skylights. The greater number of the smaller skylights are used for this purpose; the larger ones are built for conservatories, photographic and other studios, and for large public buildings, exhibition rooms, railroad stations, etc.

**2. Forms of Skylights.**—Skylights are variously known as *single-pitch*, *double-pitch*, *gable*, *hipped*, *turret*, *ceiling*, *ventilating*, *extension*, *photographic*, and *conservatory*, according to the form and the use to which each is put. Conservatory skylights and those for large roofs are often built with curved ribs. The constructions shown in these problems may be adapted to all forms of metal skylights. In many instances, the cornice maker will encounter conditions that require the several parts to have profiles different from those given. These must be designed to suit the special requirements of the particular case in hand, but the methods of development will not differ materially from those given here.



For notice of the copyright, see page immediately following the title page.

A 11.—41

Digitized by Google

**3. Character of Problems.**—The problems involved in skylight work are those of mechanical construction rather than of miter cutting. So far as the miters between the several bars, curbs, etc. are concerned, the principles that govern their development are the same as those explained for ordinary moldings in previous sections. The miters required for skylight developments are principally plain square miters, square miters between moldings of different profiles, and miters between raking and horizontal moldings. The modifications necessary to adapt any chosen profile to its position in the different parts of a skylight structure, however, are sometimes other than those produced by the raking process, thus rendering the work of patterncutting somewhat irregular.

It is important that the sheet-metal worker should pay special attention to the modification of moldings to suit particular cases, and it is with the object of affording the student an opportunity to become familiar with this phase of the work that the following problems have been prepared.

**4. Invention of the Metal Skylight Bar.**—Skylights with bars made of sheet metal were first used in the year 1867. About this time patents were granted almost simultaneously to two prominent manufacturers of sheet-metal work, and their respective claims were the cause of much litigation. As is too often the case, however, the controversy extended over the entire time covered by the patent grant; in fact, in this case, the matters in dispute were never definitely decided, proceedings having been discontinued at the expiration of the patents. The rival claimants issued licenses to manufacturers to make these bars, and the use of metal skylights soon became general in all parts of the country. The manufacture of metal skylights was at first confined to those firms holding licenses from the patentees, but after the expiration of the patents, most firms engaged in the manufacture of architectural sheet-metal work devised bars of one kind or another for use in skylight construction.

Digitized by Google

## CONSTRUCTION OF SKYLIGHTS.

**5.** The principal idea in skylight construction is to form a rib, or bar, by bending a piece of sheet metal in such a manner as to furnish a supporting surface for the glass and to make a gutter to carry off the water of condensation. Another object is to bring the greatest strain, or thrust, edgewise against the metal, thus combining the greatest possible strength with the least weight.

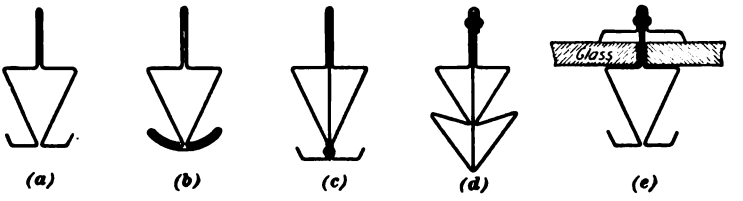


FIG. 1.

The usual forms of ribs, or rafters, are shown at (*a*), (*b*), and (*d*), Fig. 1. If, on account of increased length of rib, greater strength is required, an additional thickness of metal is added to the central portion of the bar, as shown at (*c*) and (*d*), Fig. 1. The strip added to the bar may be of any thickness necessary. After the glass is placed in position, a cap is placed over the projecting rib, or web, of the bar and fastened by riveting, as shown at (*e*), Fig. 1.

**6.** When a skylight is to be placed on a level or nearly level roof, its usual shape is pyramidal, but it is sometimes formed like a hipped roof, as shown in the plan in Fig. 2. The ribs, or rafters, are thus supported at the top against a ridge bar and at the bottom on a curb, or, properly, a finish surmounting the curb, so designed as to receive the bar and to form a gutter of sufficient capacity to carry off all the water that may be emptied into it by the several smaller gutters of the bars. If desired, the ridge may be extended to reach the entire length of the skylight, thus doing away with the end slopes and forming what is called a gable, or double-pitch, skylight. The gable ends are sometimes filled

Digitized by Google

with vertical plates of glass, but occasionally they are provided with side ventilators of any suitable form.

If no ventilators are required at the peak of the skylight, the ridge bar is constructed in the same general manner as

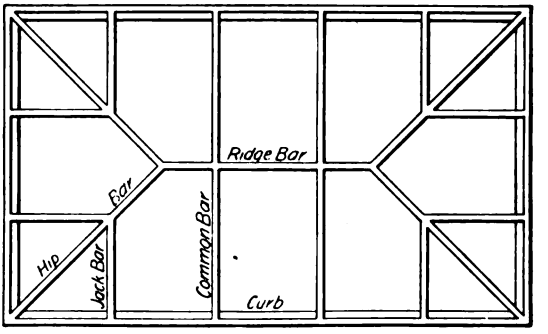


FIG. 2.

the common, or inclined, bar, but reenforced as previously explained and as shown at (*c*), Fig. 1. The surface, or shoulder, for receiving the glass, however, must incline to the pitch of the roof, but no gutter is necessary. Where

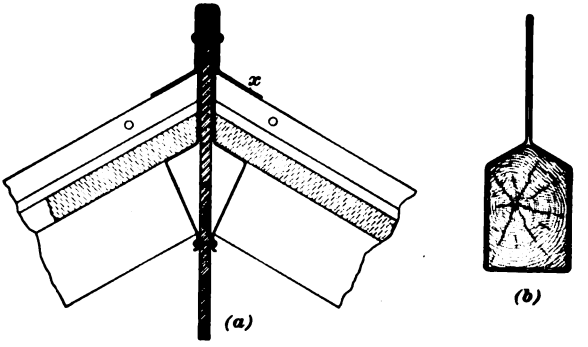


FIG. 3.

great strength is required, the reenforcing bar is sometimes a wrought-iron bar that extends far enough below the sheet-iron work to permit of the attachment of a truss rod, as shown in Fig. 3 (*a*). The ridge bar may otherwise be reenforced by a strip of wood, such as that shown in Fig. 3 (*b*).

Digitized by Google

When ventilation is required at the top of the skylight, it may be provided by one or more tubular ventilators, placed at convenient points on the ridge, or by a ridge ventilator, in the design of which some latitude is permissible.

**7.** A plain design of ridge ventilator is shown in section and in elevation in the upper part of Fig. 4. The profile of the lower members of the ridge ventilator must necessarily be the same as that of the ridge bar, but the upper portion of the ventilator may be designed to suit the fancy of the

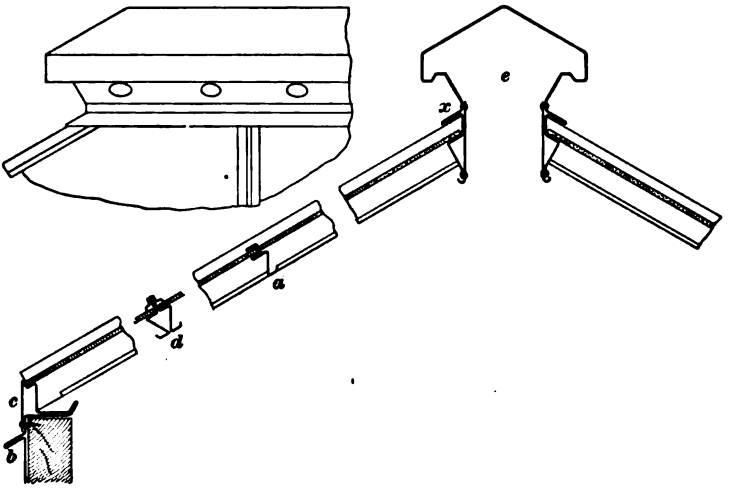


FIG. 4.

builder. An additional flange is sometimes formed in the ridge ventilator or added as a separate cap to the ridge bar, as shown at $x$, Figs. 3 and 4. This affords a protection against the possible entrance of water, and is so placed as to come just above the top of the cap placed over the common bar.

**8.** When the width of the side of the skylight is greater than the length of the plates of glass used, it becomes necessary to have between the plates a cross-bar that extends from rib to rib. This bar, of course, requires a gutter only on its upper side.

Digitized by Google

**9.** Fig. 4 represents a complete section of either a hipped or a gable skylight, and shows the profiles of the curb *c*, the common bar *d*, the cross-bar *a*, and the ventilator *e*. The profiles here shown may be adapted arbitrarily to one another, but the profile of a hip bar must be derived by the raking process from that of the common bar and from the angle of the hip as shown in the plan. The method of construction is explained in Problem 4, which should be studied carefully by the student. In the case of the gable skylight, the bar that forms the finish at either end has a profile the same as one-half that of the common bar. It also has at the top an extension of metal sufficient to cover the curb, as shown in Fig. 5.

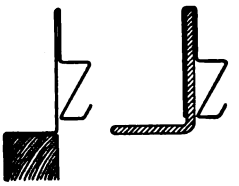

FIG. 5.

**10.** The curb that forms the eave of the skylight may be of such design as will best adapt it to the shape and material forming the base that it surmounts. Several forms of such a curb are shown in Fig. 6. The inclined projecting flange shown at *b*, Fig. 4, serves, in small skylights, as a drip to prevent water from running down the side of the

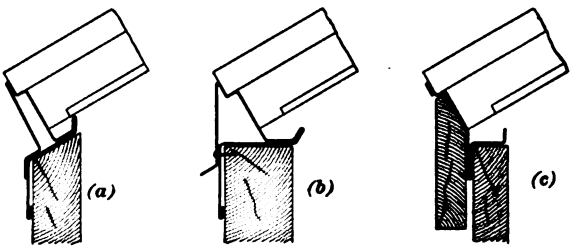


FIG. 6.

base, or curb, during a rain storm. In Fig. 6 (*b*) is shown another form of flange. Immediately below this flange, in large work, may be placed a gutter of any suitable construction. The outlet of this gutter is a small conductor pipe that discharges to the surface of the main roof. The

Digitized by Google

gutter is especially desirable in the case of the turret skylight. This skylight is made by increasing the height of the curb, which is pierced either by louvre boards or by a swinging sash.

**11.** Fig. 7 (*a*) shows a vertical section of a louvre finish for a turret skylight. Fig. 7 (*b*) shows an opening provided with a swinging sash, which is pivoted at the sides midway of its height and is made to swing outwards at the bottom. The swinging sash is made to close at the top against a

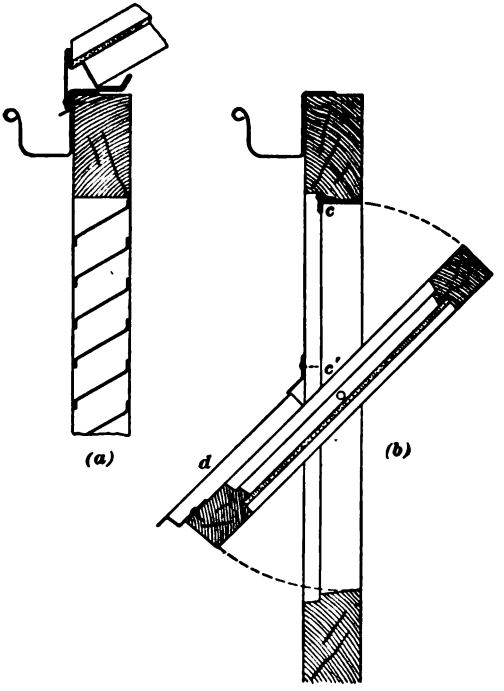


FIG. 7.

flange, or stop, formed either by a fold of the metal or by a separate piece attached to the outside of the window opening. This flange extends down on each side of the opening nearly to the pivots, as shown at *c*–*c'*, Fig. 7. At *d*, Figs. 7 and 8, is shown an apron attached to the bottom and lower

Digitized by Google

half of the sides of the swinging sash. This apron, when necessary, is made to reach over the rebate around the window opening, as shown. When a strictly fireproof construction is desired, the entire sash may be made of sheet metal, a suitable horizontal section of which is shown in Fig. 9.

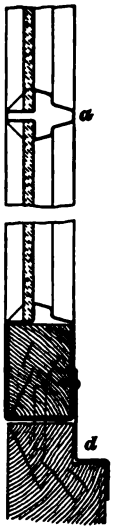


FIG 8.

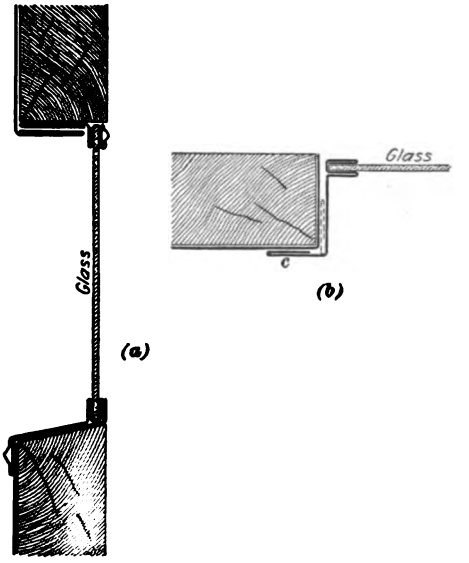


FIG. 9.

Since the miters at the angles of the sash are simple square miters, no further demonstration of them need be given save to say that any such bars as those shown in Fig. 1 (*a*) that are used as mullions are set against the top and the bottom rails and form butt miters, but no miters are cut in the rails.

When a practical rather than a pretentious design is desired, the sash is constructed as in Fig. 9; at (*a*) is shown a vertical, and at (*b*) a horizontal, section. The section at (*b*) shows the construction below the pivot. The flange, or apron, *c* is omitted above the swinging point, the edge being turned in between the sash and the jamb, as shown by the dotted lines.

Digitized by Google

PROBLEM 1.

**12. To develop the pattern for the curb of a hipped skylight.**

EXPLANATION.—As has been stated in the introduction, the hipped skylight is one that has an equal slope on all of its sides. The curb for such a skylight forms a continuous molding that passes horizontally around the four sides; consequently, the miters at the corners of the curb are ordinary square miters.

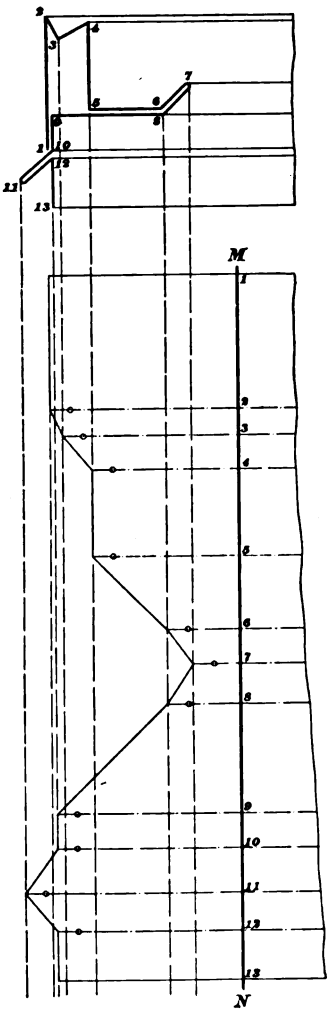


FIG. 10.

As trade workers well know, the lower extremity of the hip bar joins the curb directly over the square miter therein. This fact might seem to the novice to complicate the construction, but in the practice of the workshop, the square miter of the curb is cut and the pieces are fitted together without any attention being paid at this time to the miter of the hip bar. The pattern for the miter at the lower extremity of the hip bar is developed in a later problem.

The method given in Problem 1, *Development of Moldings*, as a short process for developing a square miter should be all that the student needs to assist him in this problem. Since this profile is of peculiar construction, we shall, however, in order to avoid error on the part of the student, more fully explain the development.

Digitized by Google

CONSTRUCTION.—A profile suitable for the curb of a hipped skylight is shown in Fig. 10. Curbs of this form are desirable for the reason that the skylight may be erected without having the wooden sill beveled. The draftsman may, however, devise many other profiles that will accomplish the same result.

Since there are no curved portions that require interedge lines, the several edges of the profile may be numbered consecutively, as shown by the small numerals in Fig. 10. This numbering may begin at either end of the profile. The stretchout $MN$ is next developed in the usual manner in the correct relative position. The pattern is completed by drawing edge lines at right angles to the stretchout, and developers between the profile and corresponding edge lines on the stretchout. The pattern outline is defined in the usual manner by straight lines connecting the adjacent points of intersection. Since strength is an important feature of skylight construction, laps for riveting should be provided at every available edge.

---

PROBLEM 2.

**13. To develop the patterns for the miters at the top and the bottom of a common skylight bar.**

EXPLANATION.—The construction drawing necessary for this development is shown in Fig. 11. In this illustration, (*a*) represents a profile for the curb ; (*b*) is a half profile for the ridge. The profile, or cross-section, of the skylight bar is shown at (*c*). All of these profiles may, of course, be modified to suit the requirements of any desired design.

CONSTRUCTION.—It is first necessary to draw an oblique line $a\,b$ to represent the pitch of the skylight. A center line $c\,d$ for the profile of the bar is next drawn at right angles to $a\,b$. Lines parallel to $a\,b$ must now be drawn from the several angles of the profile, as shown in Fig. 11. It is convenient, in this case, to make the profiles at (*a*)

Digitized by Google

and (*b*) about 6 inches apart; that is, to represent the line *a b* 6 inches long When constructing the profiles at (*a*) and (*b*), the student must be careful to see that the rest for the glass is in the same plane as the rest for the common bar. The upper member of the bar at the end nearest the

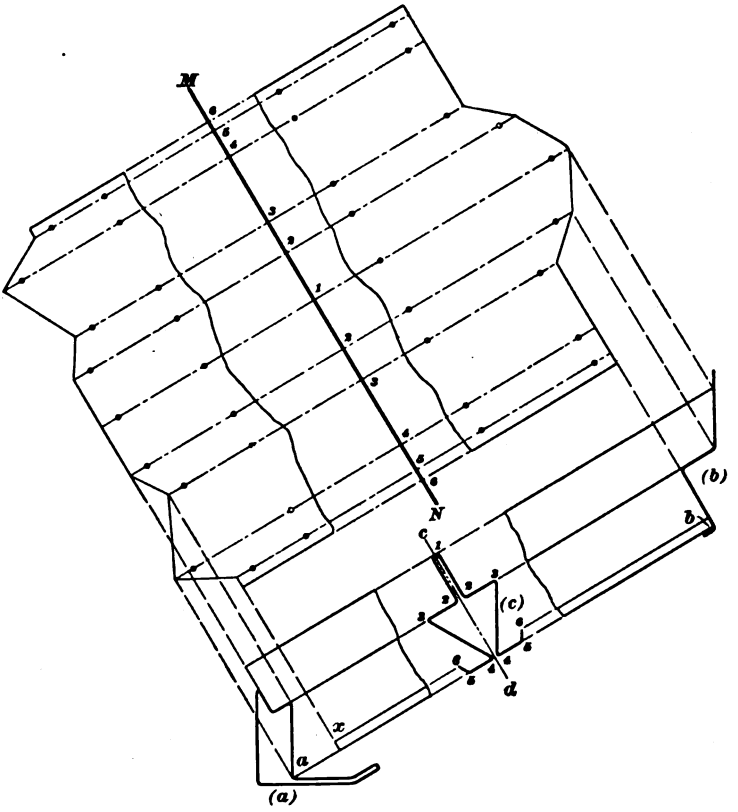


FIG. 11.

curb may be cut off either at right angles to the oblique roof line or vertically, as desired. It is usually considered desirable to cut the profile of this member at right angles to the roof line, since the pattern is thus made somewhat more simple and requires less trimming.

Digitized by Google

The several edges of the profile at (*c*), beginning at the upper edge, may be designated by numerals, as in Fig. 11. The stretchout *MN* is next developed in the usual manner, and the pattern is completed by developers drawn from the extremities of the edge lines.

A point that should not be overlooked is that the member *5–6*, which is the gutter side of the bar, should be cut away at any convenient distance from the end, as at *x*, to permit of the free discharge of the water into the larger gutter of the curb. Edges for riveting may be allowed at available points.

Since this bar must be made from one piece of metal, its correct length should be obtained from a full-size working drawing or from a carefully made scale or detail. It is usual to provide, on convenient edges of the pattern, laps for riveting.

---

PROBLEM 3.

**14. To develop the patterns for a miter between the curb and the end bar of a gable skylight.**

EXPLANATION.—The smaller sizes of gable skylights are frequently constructed with their gable ends of sheet metal. Skylights made in this manner may be erected on wooden bases whose tops are level. When the skylight is a large one, however—say 8 feet by 10 feet—the wooden base on which the skylight rests is continued into the gable, and a side bar like that shown at (*a*), in Fig. 12, is used to form the finish at the sides. The drawings for this problem illustrate the construction for the wooden gable end only. The manner in which the metallic gable end is formed and the patterns for it are developed will be understood from the illustration.

CONSTRUCTION.—A plan and an elevation in which the profiles of the curb and of the side bar are shown must first be drawn as in Fig. 12. The drawing must show, of course,

Digitized by Google

the correct angle of inclination, and the profiles must appear in the relative positions shown. The profiles at (*a*) and (*c*) represent, respectively, the side bar in the elevation and in the plan, while the profile at (*b*) shows the form of the curb. It will be seen that the pattern for the side bar may be developed from the elevation and that for the curb from the plan.

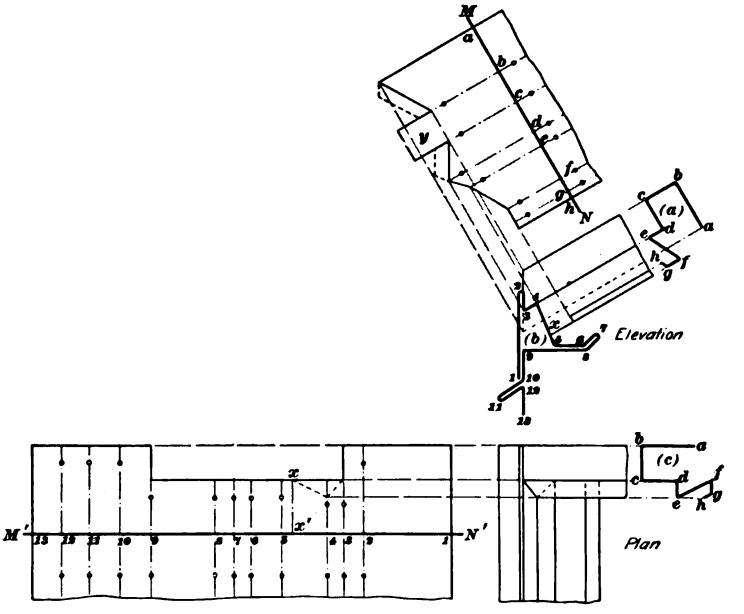


FIG. 12.

The pattern for the side bar is laid off in Fig. 12 on a stretchout *MN* developed from the profile at (*a*). The several edges of the profile are indicated in the illustration by lower-case letters, and since corresponding positions on the stretchout are designated by similar letters, the student should have no difficulty in following the construction.

The portion *bc* of the profile (*a*)—which is called the roof strip—must, in the pattern, be extended sufficiently to close up the opening in the end of the side bar; that is, it should

Digitized by Google

reach down to the point *3* of the profile (*b*) so as to close over the laps left on the adjacent surfaces *a b* and *c d*.

The method of obtaining the pattern for the miter at the upper end of the side bar is so nearly like the corresponding miter in the common bar of the preceding problem that no description of the process need be given.

The pattern for the end of the curb must be developed from the plan. It is necessary, therefore, that the line of intersection between the side bar and the curb should be carefully projected in this view. The several edges of the curb are designated on the profile (*b*) in Fig. 12 by numerals, and the student should have no difficulty in developing the stretchout *M' N'*, which is drawn at right angles to the lines of the curb in the plan. It will be noticed that the surfaces of the curb from edges *1* to *3* and from edges *9* to *13* finish squarely on the line that represents the outer surface of the side curb and that the portions on the profile from *3* to *9* terminate squarely against the inner surface of the side curb. It may be desirable, however, to miter that portion of the profile between *3* and *x* with the surfaces *d e* and *c f* of the side curb. In such a case, the miter would be drawn as shown by the dotted lines in the pattern *M' N'*.

---

PROBLEM 4.

**15. To develop the patterns for the miters at the top and the bottom of a hip bar.**

EXPLANATION.—The general principle involved in this problem is the same as that given in the preceding section in a problem that treats of the raking of a pediment cornice from an octagon return. In the present case, however, the operation is only partially carried out. As remarked in the introduction, the profile of the ridge bar, or finish, is adapted arbitrarily to that of the common bar. The principal requirement of the ridge bar or of the ventilator, as the case may be, is that the surface, or shoulder, on which the glass

Digitized by Google

rests must be in the same plane as the corresponding surface of the common bar. Its angle of inclination must therefore be the same as the pitch of the roof or of the surface of the glass, as shown in the transverse section in Fig. 13. Its lateral projection may or may not be the same as that of one-half of the common bar, and since there is no gutter required on the ridge bar, it may, if deemed advantageous, be extended down below the line drawn from the lowest point of the profile (*a*) of the common ridge bar.

As in the case of the ridge bar, the glass shoulder of each side of the hip bar must lie in the same plane with the glass shoulders of the adjacent common and ridge bars. On account of the oblique position of the hip bar, it is apparent that the glass shoulder will not be at right angles to the vertical surface of the central web. The method of determining the correct angle between the surfaces that compose the glass shoulder is somewhat like that used to determine the angle of the hip roll in Problem 18, *Development of Moldings*, since similar principles are involved in both cases.

CONSTRUCTION.—As in Problem 2, the drawings first made are those in which the plan and the transverse section may be shown, as in Fig. 13. When the plan is projected, the width of the end slope must be the same as that of the center. This drawing must show, also, the profile of the curb and the profile of a common bar. The profile at (*b*) in the plan may, for the present, be represented the same as that of the common bar in the elevation, since the lateral width of both the hip and the common bar must be the same. For convenience of reference, the profiles at (*a*) and (*b*) should be designated by similar figures at the corresponding edges. It will be advantageous, also, if the intersections of the edge lines from the profile at (*a*) are indicated at (*c*) by similar numerals. Projectors from the several edges of the profile at (*b*) should also be drawn indefinitely in either direction parallel to the center line *D E* of the hip. These projectors are next intersected by vertical lines from points of corresponding number on the profiles at (*c*) and (*d*). In this manner the foreshortened views of the miters at the

Digitized by Google

top and the bottom of the hip bar are represented in the plan. It should be noted, however, that the vertical lines last drawn must intersect only those lines in that half of the hip bar adjacent to the transverse section; the plan of the other half of the miters may be shown, if desired, by transferring with the dividers on *D E* as a center line.

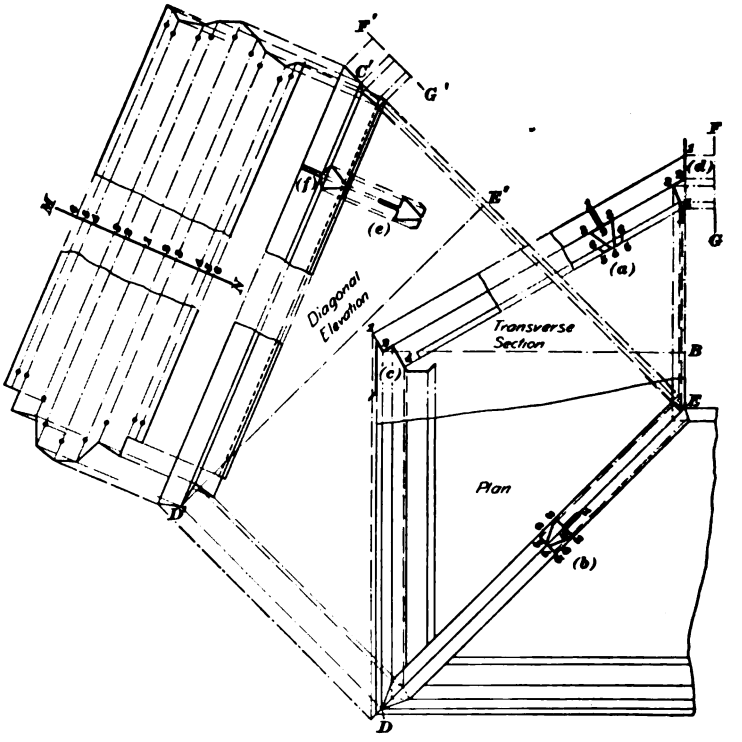


FIG. 13.

Before the patterns for the miters can be developed, it is necessary to construct a diagonal elevation of the hip bar. This is necessary for the reason that only in such a view can the true lengths of the edge lines be shown.

Since the pitch of the hip bar depends on two dimensions, which, in the language of the skylight maker, are termed, respectively, the "rise" and the "run," these distances

Digitized by Google

must be determined carefully and represented in the diagonal elevation next to be drawn. To accomplish this result, we may assume any line of the transverse section—in this case the line of the glass shoulder *2–2*—and from its lower extremity draw the horizontal line *2–B*, as shown in Fig. 13. The points *2* have already been projected to the plan from the profiles at (*c*) and (*d*), as shown at *D* and *E*, Fig. 13. An inspection of the illustration will now show that *D E* in the plan is the run of the hip bar and that the vertical *B–2* of the transverse section is its rise. The diagonal elevation may now be constructed by projectors from the plan drawn at right angles to *D E*. In this view the line *D' E'* is made equal in length to *D E* of the plan. On *E E'* produced, the rise *B–2* is set off at *E' C'* and the line *D' C'* is next drawn. The line *D' C'* represents the true length and pitch of the glass line of the hip bar; that is, it represents a position on the hip bar that corresponds to the edge *2* of the profile at (*a*). It is usually considered advisable, in practical work, to draw the profiles of the different skylight sections in their full size and to determine the correct angles for the rise and run by means of a reduced scale drawing. When this method is followed, the distance *D' C'* may be measured by the same scale.

Since the several points in the upper miter of the hip bar must appear in the diagonal elevation at the same relative heights as corresponding points of the common bar in the transverse section, these distances may be transferred from the transverse section to the diagonal elevation by means of the dividers. It is first necessary, however, to draw a vertical line, as *F G*, conveniently near the profile at (*d*), as shown in Fig. 13. From the several edges of the profile at (*d*), horizontal lines are next drawn to the vertical *F G*. Now, *F' G'* is drawn, as shown in Fig. 13, parallel to *E' C'*, and from *C'* a line parallel to *D' E'* is drawn to *F' G'*. The distances on *F G* may now be transferred from the transverse section to *F' G'* of the diagonal elevation. From the several points thus located on *F' G'*, lines of indefinite length are drawn parallel to *D' E'*. Next, the several



Digitized by Google

points in the plan of the upper miter at $E$ are projected parallel to $E\ E'$ until they intersect corresponding lines from $F'\ G'$. The correct elevation of the upper miter may then be drawn by lines that join the adjacent intersected points, as shown. Lines from these points of intersection may now be drawn parallel to $C'\ D'$ and intersected by projectors from the lower miter of the hip bar in the plan, thus completing the correct elevation of the lower miter of the hip bar.

It is next necessary to determine the profile of the hip bar at $(f)$. This is accomplished by drawing the profile of the common bar in the position shown at $(e)$ and intersecting the edge lines of the diagonal elevation by projectors drawn from corresponding edges of the profile at $(e)$.

The pattern may now be developed on the stretchout $M\ N$ from the profile at $(f)$. It will be seen from Fig. 13 that developers are drawn from the several points in the upper and the lower miters to the edge lines in the pattern in the usual manner. Laps for riveting edges may be provided where required.

---

PROBLEM 5.

**16. To develop the patterns for a miter at the upper end of a hip bar for a skylight square in plan.**

EXPLANATION.—Hipped skylights are frequently made square in plan, in which case, when no ventilator is used, the four hip bars meet at the apex of the pyramid. The miter required at the top of the hip bar can best be obtained by first constructing a diagonal elevation as in the previous problem.

CONSTRUCTION.—After the diagonal elevation just referred to has been constructed and the profile of the hip bar has been determined, the profile should be drawn in the position shown at $(a)$, Fig. 14. Another profile of similar form is then drawn in a vertical position, as shown at $(b)$. Edge lines at the angle of the hip are now drawn from the profile

Digitized by Google

at (*a*) and produced indefinitely toward the upper side of the drawing. These edge lines are intersected, as shown at (*c*), by projectors drawn from corresponding edges of the profile at (*b*). The foreshortened view of the miter at the upper extremity of the hip bar may then be traced through the intersections at (*c*).

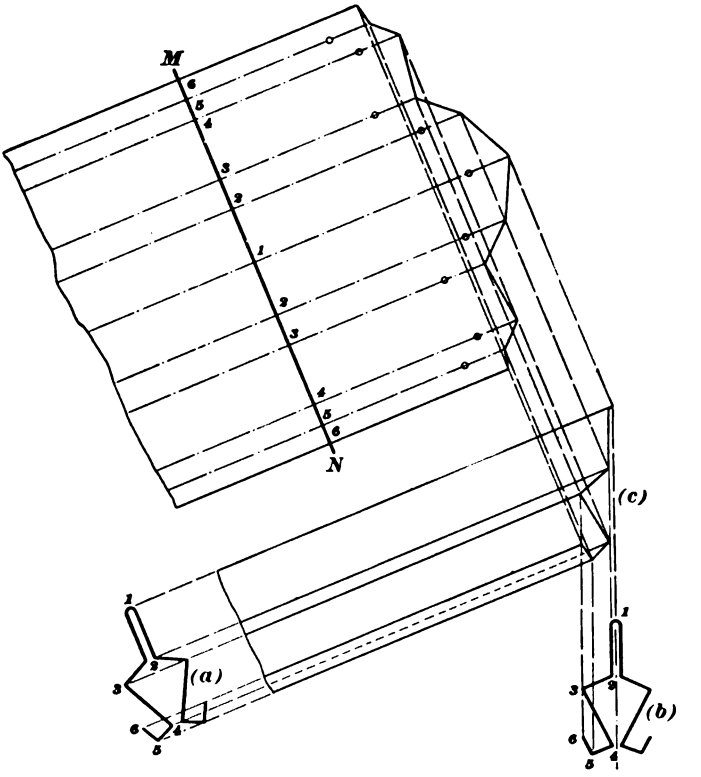


FIG. 14.

As in the preceding problem, the pattern is developed on the stretchout *M N*—which is laid off from the profile at (*a*)—by developers drawn from corresponding edges in the foreshortened view of the miter. The pattern for the lower miter is, of course, developed by the process given in the preceding problem.

Digitized by Google

PROBLEM 6.

**17. To develop the patterns for the miter at the upper extremity of a jack-bar.**

EXPLANATION.—The hip bars of skylights are usually of such length as to require more than single panes of glass on the adjacent sides. When such is the case, what are known as jack-bars, or cripples, must be used, and it is necessary to develop patterns for the miters at the upper extremities.

CONSTRUCTION.—A plan and an elevation showing the hip and the jack-bar in their correct relative positions must first be drawn as in Fig. 15. It is not necessary that either the curb or the ridge should be shown in these views, provided that the pitch of the jack-bar is correctly represented with regard to any horizontal or vertical lines that may appear on the drawing. The intersection of the two bars is first represented in the plan, as shown in Fig. 15. The jack-bar is represented in this view by horizontal lines and the hip bar by lines drawn at an angle of 45° with the horizontal lines. With the jack-bar in this position in the plan, it is possible to show its lines in their true lengths in the elevation.

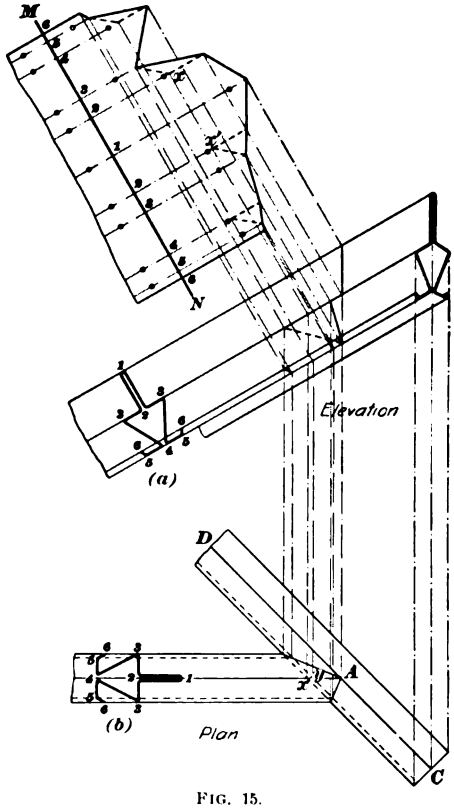


FIG. 15.

Digitized by Google

When the elevation is drawn, the correct pitch of the skylight must be represented by the oblique lines therein. The common bar is next drawn in the elevation on a center line perpendicular to the oblique lines of the skylight, as shown at (*a*). A duplicate of this profile is then drawn in the plan at (*b*). Since the profile of the hip bar has already been determined by the projectors of the preceding problem, it is known that the several members of the two profiles will form a perfect miter on the two miter lines that meet at the point *A* of the plan.

The lower end of the hip bar is represented in plan in Fig. 15 as being cut off by a vertical plane, and a foreshortened view of the section has been projected to the elevation. This feature is of no importance so far as the development of the miters is concerned, but is drawn in Fig. 15 to aid the student to understand the drawing. The illustration also shows that the surfaces of the glass shoulder and of the gutter of the hip bar are in the same planes as corresponding portions of the common and of the jack-bar.

Before the miter patterns can be developed, the foreshortened view of the miter must be projected to the elevation from the plan. To avoid confusion, the several edges of the profiles at (*a*) and (*b*) may be designated by corresponding numerals, as in preceding problems. From the profile at (*b*), horizontal projectors are drawn in the plan to intersecting lines from corresponding edges of the hip bar. Projectors are next drawn from the points thus obtained on the miter line in the plan to the elevation, where they are intersected by oblique lines drawn from the profile at (*a*). The foreshortened view of the miter line may next be defined in the elevation by lines connecting the adjacent points of intersection, as shown in Fig. 15.

To develop the pattern, the stretchout *MN* is set off at right angles to the oblique lines of the elevation. The positions of points on the stretchout are determined, of course, from the profile at (*a*). The pattern is completed by edge lines and developers drawn in the usual manner, as shown in Fig. 15.

Digitized by Google

Since the cutting of the miter in the hip bar would tend to weaken the framework of the skylight, the miter on the jack-bar should be cut with a view of making a butt joint of the jack-bar against the hip. It will be seen from Fig. 15 that those portions of the pattern between the edge lines drawn through points *2* and *3* in each half of the pattern would, if no miter were cut on the hip bar, add an extra thickness of metal in certain positions where it is not desirable, and would produce an uneven surface in the glass shoulder. It is therefore desirable to erect a line from point $x$ of the plan to line *2* of the elevation and to define this position in the pattern, as shown at points $x$ and $x'$. A line drawn from these points to edge lines *3*, as shown by the dotted lines in the development, may be used for the outline of the pattern in preference to the solid line shown in Fig. 15. The bottom of the gutter may be treated similarly, if desired, by a line from point $y$ of the plan carried to lines *4* of the pattern. This variation of the pattern outline is also shown by dotted lines in the development of Fig. 15. Attention to the minor matters, however, may, perhaps, be given more satisfactorily by trimming the pattern at a trial fitting when the work is put together.

---

PROBLEM 7.

**18. To develop the pattern for a cross-bar.**

EXPLANATION.—When the bars of a skylight are too long to permit of the glass being set in a single length from the curb to the ridge, it becomes necessary to provide some kind of a finish, or cross-bar, between the upper and lower sheets of glass. This cross-bar, or clip, as it is sometimes called, may be of any form that permits of a water-tight connection being made between the two sheets of glass. It should have, of course, a gutter on the side nearest the upper glass, and an apron of sufficient width should be provided to cover the upper end of the lower sheet. The

Digitized by Google

profile shown at (*a*), Fig. 16, represents a practicable profile for a cross-bar. It will be seen from the illustration that the lower portion of the cross-bar is similar in form to one-half of the common bar shown at (*b*). The miter between the cross-bar and the common bar is, when such a profile is used, a simple square miter, although the conditions of skylight construction are such as to make the miter a somewhat irregular one. Since the cross-bar consists of only a single thickness of metal, and since no miter can be cut on the side of the common bar, the joint must be constructed as a butt miter.

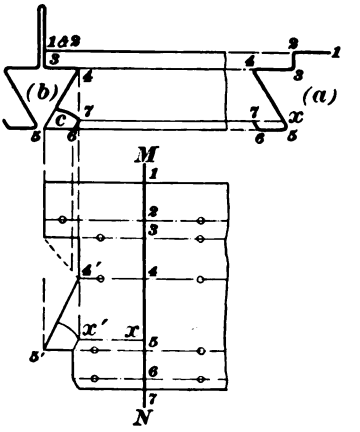

FIG. 16.

CONSTRUCTION.—Fig. 16 shows at (*b*) a sectional view of the common bar; an elevation of the cross-bar is shown at (*a*). This drawing is made in a plane at right angles to the pitch of the glass, and in this respect differs from the vertical-plane views that have been used to illustrate the preceding problems. To avoid confusion, the several edges of the profile at (*a*) may be indicated by numerals, as shown in the illustration. From each of the edges, horizontal projectors are next drawn to their intersections with the profile of the common bar at (*b*). The stretchout *M N* is now developed in the usual manner from the profile at (*a*), and edge lines and developers are drawn to define the pattern outline.

Since the gutter of the cross-bar must have an outlet into the gutter of the common bar, an allowance must be made for this in the pattern. This is represented in Fig. 16 by the horizontal projector from the point 7 of profile (*a*); this horizontal projector is carried back until it cuts the side *4–5* at the point *x*. The point *x* is next located in its corresponding position on the stretchout, and a developer is drawn from point 7 of the profile at (*b*) to the edge line from *x* in the

Digitized by Google

development. This is shown in Fig. 16 at the point $x'$. The pattern outline may then be cut in the manner indicated by the short arc from the point $x'$ in the development.

---

PROBLEM 8.

**19. To develop the patterns for a ridge ventilator.**

EXPLANATION.—The particular design of ventilator to be used on the ridge of a hipped skylight is largely a matter that must be left to the discretion of the builder. The design shown in Fig. 4 is one that has been used very extensively. The air capacity of this ventilator can be increased by having more perforations than shown in the side elevation.

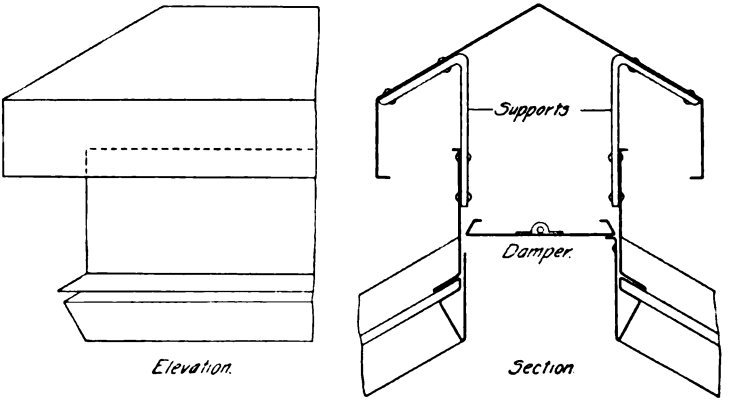


FIG. 17.

Another design for a ventilator is shown in Fig. 17. Though severely plain in design, this ventilator serves its purpose well and meets with general approval. The hood, or cap, is made separate from the body, or neck, and is supported on brackets of band iron, as shown, the space between the parts being from 2½ to 3 inches. The neck is also provided with a damper pivoted at the center; the damper is operated by means of cords. On that portion of the ventilator against which the bars are mitered, an additional

Digitized by Google

flange is shown just above the glass. This is a feature not shown in Fig. 4, but is equally applicable to the design there shown.

CONSTRUCTION.—The developments needed for this ventilator are not illustrated, since they are common square miters similar to those already explained. The student should, however, avail himself of the practice obtained by making developments from projection drawings of this and other ventilators. It will be seen from Fig. 17 that the miters at the tops of skylight bars that fit against this ventilator will be ordinary butt miters—the same as those made for the bars that finish against a ridge bar. The development of the patterns for the hip bar, when such a ventilator as that shown in Fig. 17 is used, affords an interesting problem for the student that desires to work out complicated situations.

---

## DRAWING PLATE, TITLE: EXAMINATION PLATE V.

**20.** The final Examination Plate to be drawn by the student in this Course consists of the developments, drawn to any convenient scale, of the patterns for the miters at the upper and the lower extremities of a hip bar, of a jack-bar, and of a common bar. No copy of the drawing plate is given in this section; the student is expected to construct the necessary projection drawings and develop the patterns therefrom aided only by the instruction he has already received.

The profile of the bar to be used for these drawings may be selected at the pleasure of the student. The inclination of the skylight is also a matter of choice. As in previous drawings made by the students in this Course, all construction lines for the development of the several patterns should be left on the plate. The drawing plate should be of the same size as those heretofore used, and should be sent in for correction in the usual manner.

REESE LIBRARY
OF THE
UNIVERSITY

Digitized by Google

Digitized by Google

# INDEX.

NOTE.—All items in this index refer first to the section (see the Preface) and then to the page of the section. Thus, "Bead mold 20 64" means that bead mold will be found on page 64 of section 20.


| A. | Sec. | Page. |
|---|---|---|
| Abacus | 20 | 19 |
| Abutments | 20 | 70 |
| Accuracy, Importance of | 15 | 45 |
| " Importance of | 16 | 23 |
| Accurate developments | 16 | 4 |
| Allowances in patterns | 17 | 5 |
| Alphabet, Block-letter | 20 | 82 |
| " French Roman | 20 | 85 |
| Angular bends | 17 | 6 |
| Approximate developments | 16 | 5, 63 |
| Arc method of secondary projectors | 15 | 41 |
| Arch | 20 | 70 |
| " Elliptical | 20 | 73 |
| " Five-centered | 20 | 72 |
| " Flat | 20 | 76 |
| " Gothic | 20 | 12, 74 |
| " Horseshoe | 20 | 75 |
| " Moorish | 20 | 75 |
| " Names of parts of | 20 | 70 |
| " of Constantine | 20 | 11 |
| " Pointed | 20 | 74 |
| " Segmental | 20 | 72 |
| " Semicircular | 20 | 71 |
| " Soffit of | 20 | 71 |
| " Stilted | 20 | 74 |
| " Three-centered | 20 | 72 |
| " Venetian Gothic | 20 | 75 |
| Architect, Duties of | 20 | 2 |
| Architecture, Orders of | 20 | 22 |
| " why studied | 20 | 1 |
| Architectural forms | 20 | 55 |
| " proportions | 20 | 86 |
| Architrave | 20 | 20 |
| Ash-chute head, Patterns for | 18 | 74 |
| Astragal | 20 | 19 |
| Axial line | 15 | 60 |

| B. | Sec. | Page. |
|---|---|---|
| Ball and molding, Miter between | 21 | 65 |
| Balusters | 20 | 58 |
| Balustrade | 20 | 59 |
| Bar, Common skylight | 22 | 4 |
| " Hip skylight | 22 | 4 |
| " Jack skylight | 22 | 4 |
| " Ridge skylight | 22 | 4 |
| Barrow, Pattern for | 19 | 63 |
| Base line | 15 | 14 |
| Basis of projection | 15 | 89 |
| Bath, Pattern for foot | 17 | 52 |
| " Pattern for sitz | 17 | 56 |
| " Pattern for steel-clad | 17 | 64 |
| " Pattern for wood-cased | 17 | 59 |
| Bay-window soffit, Pattern for | 21 | 74 |
| Bead mold | 20 | 64 |
| Bed course | 20 | 21 |
| Bell | 20 | 19 |
| Bends, Angular | 17 | 6 |
| Block-letter alphabet | 20 | 82 |
| Boot, Pattern for center | 18 | 32 |
| " Pattern for offset | 18 | 35 |
| Boss, Pattern for bracket | 21 | 29 |
| " Pattern for conical | 17 | 105 |
| " Pattern for faucet | 17 | 80 |
| Bottom plan | 15 | 7 |
| Brace, Pattern for faucet | 17 | 80 |
| Bracket boss, Pattern for | 21 | 29 |




Digitized by Google

| | Sec. | Page. |
|---|---|---|
| Bracket, Pattern for raking | 21 | 52 |
| " Raking | 20 | 68 |
| Branch Y, Pattern for four-way | 18 | 25 |
| Breast, Pattern for oil-can | 17 | 84 |
| Brewing kettle, Pattern for | 19 | 42 |
| Broken pediments | 20 | 69 |
| Butt miter, Pattern for | 21 | 22 |

| C. | Sec. | Page. |
|---|---|---|
| Cap, Pattern for stack | 19 | 16 |
| Capital | 20 | 19 |
| Caryatides | 20 | 8 |
| Cavetto | 20 | 18, 62 |
| Ceiling plan | 15 | 7 |
| Center boot, Pattern for | 18 | 32 |
| " line | 15 | 56 |
| Change of profile | 21 | 12 |
| Chord distance, Measurement of | 16 | 34 |
| Circle | 15 | 79 |
| Classic moldings | 20 | 60 |
| Classification of solids | 16 | 3 |
| Clip, Skylight | 22 | 22 |
| Clustered columns | 20 | 58 |
| Coal hod, Pattern for | 17 | 107 |
| Coffee-pot lip, Pattern for | 17 | 75 |
| Column | 20 | 13 |
| " Clustered | 20 | 58 |
| " Modifications of | 20 | 55 |
| Common skylight bar | 22 | 4 |
| " skylight bar, Pattern for | 22 | 10 |
| Comparison of gauges | 17 | 19, 20 |
| Complicated forms, Pattern for | 17 | 2 |
| Composite order | 20 | 23, 53 |
| Compression chamber, Pattern for | 19 | 46 |
| Cone and cylinder, Intersection of | 15 | 92 |
| " and pyramid, Relation of | 16 | 36 |
| " Development of | 16 | 38, 44 |
| " Development of frustum of | 16 | 40 |
| " Development of intersecting | 16 | 47 |
| " Development of irregular frustum of | 16 | 46 |
| " Development of scalene | 16 | 61 |
| " Elements of | 15 | 79 |
| " Intersection of | 15 | 93 |
| " Projection of | 15 | 66 |
| Conic elbow, Pattern for | 18 | 13 |
| " sections | 15 | 79, 83 |
| Conical boss, Pattern for | 17 | 105 |
| " outlet, Pattern for | 18 | 68 |
| " spout, Pattern for | 17 | 72 |
| Connection, Pattern for oblique-pipe | 18 | 44, 49 |
| " Pattern for roof | 18 | 56, 61 |
| Constantine, Arch of | 20 | 11 |
| Construction lines for developments | 16 | 23, 42 |
| " of skylights | 22 | 3 |
| Contract record | 17 | 4 |
| Conveyor flight, Pattern for | 19 | 66 |
| Corinthian order | 20 | 10, 17 |
| " order | 20 | 23, 45 |
| " order, Grecian | 20 | 45 |
| " order, Roman | 20 | 49 |
| Cornice | 20 | 20 |
| Corona | 20 | 21 |
| Course, Bed | 20 | 21 |
| " Dentil | 20 | 21 |
| " Modillion | 20 | 21 |
| Cove | 20 | 18, 62 |
| Cover, Pattern for wash boiler and | 17 | 86 |
| Cripples, Skylight | 22 | 20 |
| Cromlech | 20 | 7 |
| Cross-bar, Pattern for skylight | 22 | 22 |
| Crown molding | 20 | 21 |
| " molding and volute, Miter between | 21 | 39 |
| Cube, Development of | 16 | 15 |
| " Projection of | 15 | 54 |
| " Sections of | 15 | 69 |
| Curb of hip skylight, Pattern for | 22 | 9 |
| " of skylight | 22 | 4 |
| Curved moldings, Pattern for | 21 | 35 |
| " pediment, Miter against | 21 | 24 |
| Cut-off, Pattern for rain-water | 18 | 70 |
| Cutting plane, How represented | 15 | 71 |
| Cylinder and cone, Intersection of | 15 | 92 |
| " and prism, Intersection of | 15 | 89 |
| " and prism, Intersection of | 16 | 35 |
| " and pyramid, Intersection of | 19 | 79 |
| " and sphere, Intersection of | 15 | 96 |
| " and sphere, Intersection of | 16 | 35 |
| " Development of | 16 | 27 |
| " Development of intersecting | 16 | 28, 29 |
| " Development of intersecting | 16 | 33 |


Digitized by Google

| | Sec. | Page. |
|---|---|---|
| Cylinder, Intersecting | 15 | 90, 92 |
| " Projection of | 15 | 61 |
| " Sections of | 15 | 74 |
| Cyma recta | 20 | 19, 62 |
| " reversa | 20 | 19, 62 |

| D. | Sec. | Page. |
|---|---|---|
| Dado | 20 | 18 |
| Date panels | 20 | 81 |
| Days of window | 20 | 78 |
| Deck cornice and hip molding, Miter between | 21 | 67 |
| Dentil course | 20 | 21 |
| Design for sheet-metal bay window | 20 | 88 |
| Developers | 16 | 18 |
| Development | 16 | 1 |
| " Accurate | 16 | 4 |
| " Approximate | 16 | 5, 63 |
| " by parallel lines | 16 | 5 |
| " by radial lines | 16 | 8, 36 |
| " by radial lines | 16 | 42 |
| " by triangulation | 16 | 9, 49 |
| " Finishing of | 16 | 19, 30 |
| " Importance of certain views in | 16 | 13 |
| " Method used in | 16 | 2 |
| " of ash-chute head | 18 | 74 |
| " of bay-window soffit | 21 | 74 |
| " of bracket boss | 21 | 29 |
| " of brewing kettle | 19 | 42 |
| " of butt miter | 21 | 22 |
| " of center boot | 18 | 32 |
| " of coal hod | 17 | 107 |
| " of coffee-pot lip | 17 | 75 |
| " of common sky-light bar | 22 | 10 |
| " of cone | 16 | 38, 44 |
| " of conical boss | 17 | 105 |
| " of conical outlet | 18 | 68 |
| " of conical spout | 17 | 72 |
| " of conic elbow | 18 | 13 |
| " of conic frustum | 16 | 40 |
| " of conveyor flight | 19 | 66 |
| " of cube | 16 | 15 |
| " of curved molding | 21 | 35 |
| " of cut-off | 18 | 70 |
| " of cylinder | 16 | 27 |
| " of elbows | 18 | 2 |
| " of elliptical elbow | 18 | 40 |
| " of Emerson head | 19 | 18 |
| Development of faucet boss | 17 | 80 |
| " of foot-bath | 17 | 52 |
| " of four-way Y | 18 | 25 |
| " of frustum of hexagonal pyramid | 16 | 46 |
| " of funnel | 17 | 44 |
| " of gable in raking octagon mold | 21 | 46 |
| " of gable skylight bar | 22 | 12 |
| " of gore-shaped transition piece | 21 | 71 |
| " of grocer's scoop | 17 | 94 |
| " of gusset plate | 19 | 13 |
| " of gutter miter | 18 | 64 |
| " of helmet lip | 17 | 69 |
| " of hip skylight bar | 22 | 14 |
| " of hip skylight curb | 22 | 9 |
| " of intersected cylinder | 16 | 28, 29 |
| " of intersected cylinder | 16 | 35 |
| " of intersected prism | 16 | 28, 35 |
| " of intersected solids | 16 | 20 |
| " of intersecting cones | 16 | 47 |
| " of intersecting cylinder and sphere | 16 | 35 |
| " of intersecting cylinders | 16 | 29 |
| " of intersecting prisms | 16 | 31 |
| " of intricate solids | 16 | 32 |
| " of irregular elbow | 18 | 10 |
| " of irregular elbow | 19 | 25 |
| " of irregular elbow and pipe | 18 | 16 |
| " of irregular intersecting cylinders | 16 | 33 |
| " of irregular intersection | 19 | 74 |
| " of irregular solid | 16 | 54, 56 |
| " of irregular solid | 16 | 57 |
| " of miter against curved pediment | 21 | 24 |


Digitized by Google

| | Sec. | Page. |
|---|---|---|
| Development of miter against irregular pier.. | 21 | 56 |
| " of miter against oblique return. | 21 | 60 |
| " of miter between crown mold and volute .... | 21 | 39 |
| " of miter between different moldings..... | 21 | 27 |
| " of miter between different pediments..... | 21 | 48 |
| " of miter between hip and deck molds..... | 21 | 67 |
| " of miter between mold and sphere..... | 21 | 65 |
| " of miter between straight and curved mold .. | 21 | 32 |
| " of oblique connection..... | 19 | 28 |
| " of oblique pipework..... | 18 | 44, 49 |
| " of octagon miter | 21 | 20 |
| " of octagonal pyramid..... | 16 | 45 |
| " of octagonal urn | 19 | 82 |
| " of offset boot... | 18 | 35 |
| " of oil-can breast and spout..... | 17 | 84 |
| " of oil pump. .... | 17 | 101 |
| " of oil-tank top.. | 17 | 97 |
| " of pentagonal prism ..... | 16 | 26 |
| " of pump chamber..... | 19 | 46 |
| " of pyramid..... | 16 | 39 |
| " of pyramid and cylinder..... | 19 | 79 |
| " of quadrangular pyramid ..... | 16 | 44 |
| " of raking bracket..... | 21 | 52 |
| " of raking mold. | 21 | 42 |
| " of ridge ventilator..... | 22 | 24 |
| " of roof connection..... | 18 | 58, 61 |
| " of scalene cone.. | 16 | 61 |
| " of scale scoop... | 17 | 90 |
| " of ship ventilator | 19 | 50, 58 |
| " of sitz bath..... | 17 | 56 |
| " of skylight cross-bar..... | 22 | 22 |
| Development of skylight hip bar..... | 22 | 14 |
| " of skylight jack bar..... | 22 | 20 |
| " of slope sheet... | 19 | 6, 9 |
| " of smokestack cap ..... | 19 | 16 |
| " of special skylight hip bar.. | 22 | 18 |
| " of sphere..... | 16 | 64, 65 |
| " of sphere..... | 19 | 32 |
| " of spirit still.... | 19 | 37 |
| " of square miter. | 21 | 17 |
| " of square pan... | 17 | 38, 42 |
| " of steam dome.. | 19 | 3 |
| " of steel-clad bath..... | 17 | 64 |
| " of three-way elbow..... ..... | 18 | 21 |
| " of transition piece..... | 18 | 52, 55 |
| " of transition piece..... | 18 | 58, 61 |
| " of transition piece .. ..... . | 19 | 21 |
| " of wash boiler and cover..... | 17 | 86 |
| " of wash miter.. | 21 | 59 |
| " of wheelbarrow | 19 | 63 |
| " of wood-cased bath .. ..... | 17 | 59 |
| " Position of parallel..... | 16 | 15 |
| " Position of radial..... | 16 | 40 |
| " Rules for parallel ..... | 16 | 24 |
| " Rules for radial | 16 | 42 |
| (*See* Patterns). | | |
| Developments I ..... ... | 16 | 25 |
| " II .. ..... | 16 | 31 |
| " III..... | 16 | 33 |
| " IV..... | 16 | 44 |
| " V..... | 16 | 53 |
| Different moldings, Pattern for miter between..... | 21 | 27 |
| " views, Why drawn . | 15 | 14 |
| Dimension lines..... | 15 | 13 |
| " of liquid measures. | 17 | 47 |
| Division of solids, How accomplished .. ..... | 16 | 10 |
| Dome, Pattern for steam ..... | 19 | 2 |
| Doric order..... .. .... | 20 | 28, 29 |
| " order, Grecian..... | 20 | 29 |
| " order, Roman..... | 20 | 33 |
| Double lock, Allowances for... | 17 | 10 |
| " seam, Allowances for. | 17 | 10 |


Digitized by Google

| | Sec. | Page. |
|---|---|---|
| Drawing, Perspective | 15 | 3 |
| " plate, Design for Sheet-Metal Bay Window | 20 | 88 |
| " plate, Developments I | 16 | 25 |
| " plate, Developments II | 16 | 31 |
| " plate, Developments III | 16 | 33 |
| " plate, Developments IV | 16 | 44 |
| " plate, Developments V | 16 | 53 |
| " plate, Examination Plate I | 17 | 113 |
| " plate, Examination Plate II | 18 | 79 |
| " plate, Examination Plate III | 19 | 87 |
| " plate, Examination Plate IV | 21 | 79 |
| " plate, Examination Plate V | 22 | 25 |
| " plate, Intersections I | 15 | 84 |
| " plate, Intersections II | 15 | 90 |
| " plate, Projections I | 15 | 13 |
| " plate, Projections II | 15 | 46 |
| " plate, Projections III | 15 | 61 |
| " plate, Sections I | 15 | 68 |
| " plate, Sections II | 15 | 79 |
| " Preservation of | 17 | 3 |
| " To read a | 15 | 31, 56 |
| " Use of a section | 15 | 68 |
| " Working | 15 | 2 |
| Dust catcher | 18 | 79 |
| Duties of architect | 20 | 2 |

| E. | Sec. | Page. |
|---|---|---|
| Eave-trough miter, Pattern for | 18 | 64 |
| " trough outlet, Pattern for | 18 | 68 |
| Echinus | 20 | 19, 63 |
| Edge lines | 16 | 17 |
| " lines, True | 16 | 41 |
| Edges, Allowances for | 17 | 8 |
| Elbow in pipe, Pattern for irregular | 18 | 16 |
| " in pipe, Pattern for irregular | 19 | 25 |
| " Pattern for | 18 | 2 |
| " Pattern for conic | 18 | 13 |
| " Pattern for elliptical | 18 | 40 |
| " Pattern for irregular shaped | 18 | 10 |
| " Pattern for three-way | 18 | 21 |
| Elbow, Pattern for two-pieced | 16 | 29 |
| " To draw elevation of | 18 | 8 |
| Elements of cone | 15 | 79 |
| Elevation | 15 | 7 |
| " of elbows, To draw | 18 | 8 |
| Ellipse | 15 | 79, 81 |
| Elliptical arch | 20 | 73 |
| " elbow, Pattern for | 18 | 40 |
| Emerson head, Pattern for | 19 | 18 |
| End bar of gable skylight, Pattern for | 22 | 12 |
| Entablature | 20 | 13 |
| Entasis | 20 | 27 |
| Escape | 20 | 18 |
| Examination Plate I | 17 | 113 |
| " Plate II | 18 | 79 |
| " Plate III | 19 | 87 |
| " Plate IV | 21 | 79 |
| " Plate V | 22 | 25 |
| Extrados | 20 | 71 |

| F. | Sec. | Page. |
|---|---|---|
| Face miters | 21 | 6 |
| Fascia | 20 | 18 |
| Faucet boss, Pattern for | 17 | 80 |
| Fillet | 20 | 18, 61 |
| Filter, Oil | 17 | 115 |
| Finishing the development | 16 | 19 |
| Five-centered arch | 20 | 72 |
| Flaring measure, Pattern for | 17 | 47 |
| Flat arch | 20 | 76 |
| Flight, Pattern for conveyor | 19 | 66 |
| Foot-bath, Pattern for | 17 | 52 |
| Foreshortened views | 15 | 9 |
| Forms, Architectural | 20 | 55 |
| " Geometrical | 15 | 9 |
| " Patterns for complicated | 17 | 2 |
| " Recognition of radial | 16 | 49 |
| " Skylight curb | 22 | 6 |
| Four-way Y, Pattern for | 18 | 25 |
| French Roman alphabet | 20 | 85 |
| Frieze | 20 | 20 |
| Front elevation | 15 | 7 |
| Frustum, Development of conic | 16 | 40 |
| " of cone, Development of irregular | 16 | 46 |
| " of pyramid, Development of | 16 | 46 |
| Full view | 15 | 42 |
| " view, Position of | 15 | 50 |
| Funnel, Pattern for | 17 | 44 |
| Furnace boot, Pattern for center | 18 | 32 |
| " boot, Pattern for offset | 18 | 35 |


Digitized by Google

| G. | Sec. | Page. |
|---|---|---|
| Gable mold, Wash miter in | 21 | 59 |
| " skylight, Pattern for end bar | 22 | 12 |
| Galvanized iron | 17 | 19 |
| Garbage-chute head | 18 | 74 |
| Gauge, Comparison of | 17 | 19, 20 |
| " for sheet metal | 17 | 15 |
| " U. S. standard | 17 | 21 |
| Geometrical forms | 15 | 9 |
| Gores, Pattern for sphere by | 16 | 65 |
| Gore-shaped transition piece, Pattern for | 21 | 71 |
| Gothic arch | 20 | 12, 74 |
| Gravity, Specific | 17 | 34 |
| Grecian Corinthian order | 20 | 45 |
| " Doric order | 20 | 29 |
| " Ionic order | 20 | 37 |
| Grocer's scoop, Pattern for | 17 | 94 |
| Gusset plate, Pattern for | 19 | 13 |
| Gutter miter, Pattern for | 18 | 64 |
| " outlet, Pattern for | 18 | 68 |

| H. | Sec. | Page. |
|---|---|---|
| Haunches of arch | 20 | 71 |
| Head of window | 20 | 79 |
| Helmet lip, Pattern for | 17 | 60 |
| Hexagonal pyramid, Development of frustum of | 16 | 46 |
| Hidden surfaces | 15 | 56 |
| Hip and deck mold, Miter between | 21 | 67 |
| " bar, Pattern for | 22 | 14 |
| " skylight, Pattern for curb of | 22 | 9 |
| Hod, Pattern for coal | 17 | 107 |
| Horizontal plane | 15 | 15 |
| Horshoe arch | 20 | 75 |
| Hyperbola | 15 | 79, 82 |

| I. | Sec. | Page. |
|---|---|---|
| Ill-proportioned structures | 20 | 3 |
| Imagination, Help of the | 15 | 10 |
| " Help of the | 16 | 24 |
| Importance of accuracy | 15 | 45 |
| " of accuracy | 16 | 23 |
| " of correct projection | 16 | 59 |
| Inclined letters | 20 | 84 |
| " lines | 15 | 24 |
| " planes | 15 | 40 |
| " solids | 15 | 58, 59 |
| Inside miters | 21 | 8 |
| Interedge lines | 16 | 23 |
| Interpretation of orders | 20 | 24 |
| Intersections I | 15 | 84 |
| Intersections II | 15 | 90 |
| " General instructions for | 15 | 89 |
| " of cones | 15 | 93 |
| " of cones | 16 | 47 |
| " of cylinder | 15 | 90, 92 |
| " of cylinder | 16 | 29, 33 |
| " of cylinder | 16 | 28 |
| " of cylinder and cone | 15 | 92 |
| " of cylinder and prism | 15 | 89 |
| " of cylinder and prism | 16 | 35 |
| " of cylinder and pyramid | 19 | 79 |
| " of cylinder and sphere | 15 | 96 |
| " of cylinder and sphere | 16 | 35 |
| " of prism | 15 | 86 |
| " of prism | 16 | 28, 31 |
| " of solids | 16 | 20 |
| " Pattern for irregular | 19 | 74 |
| Intrados | 20 | 71 |
| Intricate solids, Development of | 16 | 32 |
| Invention of skylight bar | 22 | 3 |
| Involved miters | 21 | 76 |
| Ionic order | 20 | 23, 37 |
| " order, Grecian | 20 | 37 |
| " order, Roman | 20 | 41 |
| Iron, Galvanized | 17 | 19 |
| Irregular elbow, Pattern for | 19 | 25 |
| " elbow and pipe, Pattern for | 18 | 16 |
| " intersection, Pattern for | 19 | 74 |
| " intersection of cylinders, Pattern for | 16 | 33 |
| " pier, Miter against | 21 | 56 |
| " shaped elbow, Pattern for | 18 | 10 |
| " solid, Development of | 16 | 54, 56 |
| " solid, Development of | 16 | 57 |
| " solid, Projection of | 15 | 75 |
| " solid, Section of | 15 | 75 |
| Irregularly outlined surface, Projection of | 15 | 46, 52 |

| J. | Sec. | Page. |
|---|---|---|
| Jack-bar | 22 | 4 |
| " bar, Pattern for | 22 | 20 |


Digitized by Google

| K. | Sec. | Page. |
|---|---|---|
| Kettle, Pattern for brewing.... | 19 | 42 |
| Keystone..... | 20 | 71 |
| Knowledge of architecture, Why necessary..... | 20 | 1 |

| L. | Sec. | Page. |
|---|---|---|
| Label moldings..... | 20 | 77 |
| Laps, Allowances for..... | 17 | 8 |
| Laying off the stretchout ..... | 16 | 16 |
| Letters, Oblique..... | 20 | 84 |
| Line, Axial ..... | 15 | 60 |
| " Base..... | 15 | 14 |
| " Center..... | 15 | 56 |
| " Development by radial.. | 16 | 36 |
| " Dimension..... | 15 | 13 |
| " Edge..... | 16 | 17 |
| " Finding position of miter | 21 | 12 |
| " in a development, Finish of..... | 16 | 30 |
| " Inclined position of..... | 15 | 24 |
| " Interedge..... | 16 | 23 |
| " Miter..... | 15 | 84 |
| " Oblique position of ..... | 15 | 32 |
| " of sight..... | 15 | 5 |
| " of sight, Foot of..... | 15 | 15 |
| " Projection of... ..... | 15 | 20 |
| " Right position of..... | 15 | 20 |
| " To find the true length of..... | 15 | 34 |
| " True edge ..... | 16 | 41 |
| Lip, Pattern for coffee-pot..... | 17 | 75 |
| " Pattern for helmet ..... | 17 | 69 |
| Liquid measures, Dimensions of..... | 17 | 47 |
| Locks, Allowances for..... | 17 | 8, 9 |
| Louvre for skylight..... | 22 | 7 |

| M. | Sec. | Page. |
|---|---|---|
| Marking patterns..... | 17 | 14 |
| Measurement of chord distances..... | 16 | 34 |
| Measures, Dimensions of liquid | 17 | 47 |
| " Patterns for flaring. | 17 | 47 |
| Method of transfer..... | 17 | 13 |
| " of triangulation..... | 16 | 49, 60 |
| Metope..... | 20 | 31 |
| Micrometer ..... | 17 | 16 |
| Miter against curved pediment | 21 | 24 |
| " against irregular pier.... | 21 | 56 |
| " against oblique return.. | 21 | 60 |
| " between crown mold and volute ..... | 21 | 39 |
| " between different molds | 21 | 27 |
| " between different pediments ..... | 21 | 48 |
| Miter between hip and deck molds ..... | 21 | 67 |
| " between mold and sphere..... | 21 | 65 |
| " between straight and curved molds... ..... | 21 | 32 |
| " Butt..... | 21 | 22 |
| " Eave-trough..... | 18 | 64 |
| " Face..... | 21 | 6 |
| " Gable-skylight..... | 22 | 12 |
| " Inside..... | 21 | 8 |
| " Involved..... | 21 | 76 |
| " line..... | 15 | 84 |
| " line..... | 21 | 12 |
| " Octagon..... | 21 | 20 |
| " Outside ..... | 21 | 8 |
| " Raked..... | 21 | 13 |
| " Raked octagon..... | 21 | 46 |
| " Return ... ..... | 21 | 6 |
| " Skylight, common bar... | 22 | 10 |
| " Skylight, hip bar..... | 22 | 14 |
| " Skylight, jack-bar..... | 22 | 20 |
| " Skylight, special hip bar ..... | 22 | 18 |
| " Square ..... | 21 | 17 |
| " Wash..... | 21 | 59 |
| Modifications of the column... | 20 | 55 |
| Modified methods of triangulation..... | 16 | 60 |
| Modillion course..... | 20 | 21 |
| " Raking..... | 20 | 68 |
| Modules and parts, Scale of... | 20 | 15 |
| Molding and sphere, Miter between..... | 21 | 65 |
| " Bead ..... | 20 | 64 |
| " Classic..... | 20 | 60 |
| " Crown..... | 20 | 21 |
| " Curved..... | 21 | 35 |
| " Finding profile of rake..... | 20 | 67 |
| " Label..... | 20 | 77 |
| " Miter between different ..... | 21 | 27, 48 |
| " Neck..... | 20 | 19 |
| " Ogee..... | 20 | 19, 62 |
| " Pediment..... | 21 | 42 |
| " Projection of..... | 21 | 4 |
| " Raked..... | 20 | 65 |
| " Raked octagon pediment..... | 21 | 46 |
| " Soffit..... | 20 | 77 |
| " Torus..... | 20 | 18, 64 |
| " Wash miter in gable. | 21 | 59 |
| Moorish arch..... | 20 | 75 |
| Mullions..... | 20 | 78 |
| Mutules..... | 20 | 32 |




Digitized by Google

| N. | Sec. | Page. |
|---|---|---|
| Name and date panels | 20 | 81 |
| Neck mold | 20 | 19 |
| Notches | 17 | 12 |

| O. | Sec. | Page. |
|---|---|---|
| Oblique connection, Pattern for | 19 | 28 |
| " irregular surface | 15 | 52 |
| " letters | 20 | 84 |
| " pipework, Pattern for | 18 | 44, 49 |
| " position of line | 15 | 32 |
| " position of plane | 15 | 48 |
| " position of solid | 15 | 59 |
| Observer, Position of | 15 | 4 |
| Octagonal prism, Intersected | 16 | 28 |
| " pyramid, Development of | 16 | 45 |
| " urn, Pattern for | 19 | 82 |
| Octagon miter | 21 | 20 |
| " miter, Raked | 21 | 46 |
| Offset boot, Pattern for | 18 | 35 |
| Ogee molding | 20 | 19, 62 |
| Oil-can breast, Pattern for | 17 | 84 |
| " can spout, Pattern for | 17 | 84 |
| " filter | 17 | 115 |
| " pump head, Pattern for | 17 | 101 |
| " tank top, Pattern for | 17 | 97 |
| Order, Composite | 20 | 23, 53 |
| " Corinthian | 20 | 10, 17 |
| " Corinthian | 20 | 23, 45 |
| " Different interpretation of | 20 | 24 |
| " Doric | 20 | 23, 29 |
| " Grecian Corinthian | 20 | 45 |
| " Grecian Doric | 20 | 29 |
| " Grecian Ionic | 20 | 37 |
| " Ionic | 20 | 23, 37 |
| " Roman Corinthian | 20 | 49 |
| " Roman Doric | 20 | 33 |
| " Roman Ionic | 20 | 41 |
| " Tuscan | 20 | 23, 25 |
| Orthographic projection | 15 | 1 |
| Outlet, Pattern for eave-trough | 18 | 68 |
| Outside miters | 21 | 8 |
| Ovolo | 20 | 18, 63 |

| P. | Sec. | Page. |
|---|---|---|
| Pan, Pattern for square | 17 | 38, 42 |
| Panels, Name and date | 20 | 81 |
| Pantheon | 20 | 9 |
| Parabola | 15 | 79, 82 |
| Parallel development, Rules for | 16 | 24 |
| " lines, Solids developed on | 16 | 5 |
| Parts and modules, Scale of | 20 | 15 |
| Pattern, Allowances in | 17 | 5 |
| " for ash-chute head | 18 | 74 |
| " for bay-window soffit | 21 | 74 |
| " for bracket boss | 21 | 29 |
| " for brewing kettle | 19 | 42 |
| " for butt miter | 21 | 22 |
| " for center boot | 18 | 32 |
| " for coal hod | 17 | 107 |
| " for coffee-pot lip | 17 | 75 |
| " for complicated forms | 17 | 2 |
| " for conic elbow | 18 | 13 |
| " for conical boss | 17 | 105 |
| " for conical outlet | 18 | 68 |
| " for conical spout | 17 | 72 |
| " for conveyor flight | 19 | 66 |
| " for curved molding | 21 | 35 |
| " for cut-off | 18 | 70 |
| " for elbow | 18 | 2 |
| " for elliptical elbow | 18 | 40 |
| " for Emerson head | 19 | 18 |
| " for faucet boss | 17 | 80 |
| " for flaring measure | 17 | 47 |
| " for foot-bath | 17 | 52 |
| " for funnel | 17 | 44 |
| " for four-way Y | 18 | 25 |
| " for gore-shaped transition piece | 21 | 71 |
| " for grocer's scoop | 17 | 94 |
| " for gusset plate | 19 | 13 |
| " for gutter miter | 18 | 64 |
| " for helmet lip | 17 | 69 |
| " for intersected cylinder | 19 | 79 |
| " for irregular elbow | 18 | 10 |
| " for irregular elbow | 19 | 25 |
| " for irregular elbow and pipe | 18 | 16 |
| " for irregular intersection | 19 | 74 |
| " for miter against curved pediment | 21 | 24 |
| " for miter against irregular pier | 21 | 56 |
| " for miter against oblique return | 21 | 60 |
| " for miter between crown mold and volute | 21 | 39 |
| " for miter between different moldings | 21 | 27 |
| " for miter between different pediments | 21 | 48 |
| " for miter between hip and deck molds | 21 | 67 |
| " for miter between mold and sphere | 21 | 65 |


Digitized by Google

| | Sec. | Page. |
|---|---|---|
| Pattern for miter between straight and curved mold | 21 | 32 |
| " for miter in raking octagon | 21 | 46 |
| " for oblique connection | 19 | 28 |
| " for oblique pipework. | 18 | 44, 49 |
| " for octagon miter | 21 | 20 |
| " for octagonal urn | 19 | 82 |
| " for offset boot | 18 | 35 |
| " for oil-can breast | 17 | 84 |
| " for oil-can spout | 17 | 84 |
| " for oil pump | 17 | 101 |
| " for oil-tank top | 17 | 97 |
| " for pump chamber | 19 | 46 |
| " for rake bracket | 21 | 52 |
| " for rake miter | 21 | 14 |
| " for rake molding | 21 | 42 |
| " for ridge ventilator | 22 | 24 |
| " for roof connection | 18 | 58, 61 |
| " for scale scoop | 17 | 90 |
| " for ship ventilator | 19 | 50, 58 |
| " for sitz bath | 17 | 56 |
| " for skylight, common bar | 22 | 10 |
| " for skylight, cross-bar | 22 | 22 |
| " for skylight, curb. | 22 | 9 |
| " for skylight, end bar. | 22 | 12 |
| " for skylight, hip bar. | 22 | 14 |
| " for skylight, jack-bar | 22 | 20 |
| " for slope sheet | 19 | 6, 9 |
| " for smokestack cap | 19 | 16 |
| " for special skylight, hip bar | 22 | 18 |
| " for sphere | 19 | 32 |
| " for spirit still | 19 | 37 |
| " for square miter. | 21 | 17 |
| " for square pan | 17 | 38, 42 |
| " for steam dome | 19 | 3 |
| " for steel-clad bath | 17 | 64 |
| " for T joint | 16 | 29 |
| " for three-way elbow. | 18 | 21 |
| " for transition piece | 18 | 52, 55 |
| " for transition piece | 18 | 58, 61 |
| " for transition piece | 19 | 21 |
| " for two-pieced elbow | 16 | 29 |
| " for wash boiler and cover | 17 | 86 |
| " for wash miter | 21 | 59 |
| " for wheelbarrow | 19 | 63 |
| " for wood-cased bath. | 17 | 59 |
| " How marked | 17 | 14 |
| " How transferred | 17 | 13 |
| " Relation of surfaces in a | 16 | 1 |
| (*See* Developments). | | |

| | Sec. | Page. |
|---|---|---|
| Pediment | 20 | 65 |
| " Broken | 20 | 69 |
| " Miter against curved | 21 | 24 |
| " molding | 21 | 42 |
| " molding, Miter between different | 21 | 48 |
| " molding, Raked octagon | 21 | 46 |
| Pentagonal prism, Development of | 16 | 26 |
| Perspective drawing | 15 | 3 |
| Pier, Miter against irregular | 21 | 56 |
| Pilasters | 20 | 55 |
| Pipe and elbow, Pattern for irregular | 18 | 16 |
| Pipework, Pattern for oblique. | 18 | 44, 49 |
| Plan | 15 | 7 |
| Plane | 15 | 34 |
| " Cutting | 15 | 71 |
| " cutting cylinder | 15 | 74 |
| " cutting irregular solid | 15 | 75 |
| " cutting prism | 15 | 72 |
| " cutting pyramid | 15 | 73 |
| " Inclined position of | 15 | 40 |
| " Oblique position of | 15 | 48 |
| " of projection | 15 | 15 |
| " Projection of | 15 | 37 |
| " surfaces | 15 | 34 |
| " To determine position of | 15 | 36 |
| Plate | 15 | 12 |
| " Design for Sheet-Metal Bay Window | 20 | 88 |
| " Developments I | 16 | 25 |
| " Developments II | 16 | 31 |
| " Developments III | 16 | 33 |
| " Developments IV | 16 | 44 |
| " Developments V | 16 | 53 |
| " Examination Plate I | 17 | 113 |
| " Examination Plate II | 18 | 79 |
| " Examination Plate III | 19 | 87 |
| " Examination Plate IV | 21 | 79 |
| " Examination Plate V | 22 | 25 |
| " Intersections I. | 15 | 84 |
| " Intersections II. | 15 | 90 |
| " Pattern for gusset | 19 | 13 |
| " Projections I. | 15 | 13 |
| " Projections II. | 15 | 46 |
| " Projections III | 15 | 61 |
| " Sections I. | 15 | 68 |
| " Sections II. | 15 | 79 |
| Plinth | 20 | 19 |
| Point, Projection of. | 15 | 18 |
| Pointed arch | 20 | 79 |
| Position of full views | 15 | 50 |
| " of observer | 15 | 4 |


Digitized by Google

| | Sec. | Page. |
|---|---|---|
| Position of parallel developments | 16 | 16 |
| " of plane, How determined | 15 | 36 |
| " of radial developments | 16 | 40 |
| " of sections | 15 | 8 |
| Preservation of drawings | 17 | 3 |
| Primary projectors | 15 | 17 |
| Principles of architectural proportion | 20 | 86 |
| Prism and cylinder, Intersection of | 15 | 89 |
| " and cylinder, Intersection of | 16 | 35 |
| " Intersected | 16 | 28 |
| " Intersecting | 15 | 86 |
| " Intersecting | 16 | 31 |
| " Pentagonal | 16 | 26 |
| " Projection of | 15 | 57 |
| " Sections of | 15 | 72 |
| Profile, Change of | 21 | 12 |
| " Method of finding rake | 20 | 67 |
| " Raked | 21 | 41 |
| " Skylight-bar | 22 | 3 |
| Projection, Basis of | 15 | 39 |
| " drawing, Proof of | 15 | 24 |
| " Importance of correct | 16 | 59 |
| " of cone | 15 | 66 |
| " of cube | 15 | 54 |
| " of cylinder | 15 | 61 |
| " of intersecting prisms | 15 | 86 |
| " of irregular solids | 15 | 75 |
| " of line | 15 | 20 |
| " of molding | 21 | 4 |
| " of plane | 15 | 37 |
| " of point | 15 | 18 |
| " of prism | 15 | 57 |
| " of pyramid | 15 | 64 |
| " of scalene cone | 15 | 83 |
| " of solids | 15 | 53, 57 |
| " Orthographic | 15 | 1 |
| " Planes of | 15 | 15 |
| " Views necessary in | 15 | 6 |
| Projections I | 15 | 13 |
| " II | 15 | 46 |
| " III | 15 | 61 |
| Projectors | 15 | 16 |
| " Arc method of secondary | 15 | 41 |
| " Primary | 15 | 17 |
| " Secondary | 15 | 29 |
| Proof of projection drawing | 15 | 24 |
| Proportion, Principles of architectural | 20 | 86 |
| Pump chamber, Pattern for | 19 | 46 |
| " head, Pattern for oil | 17 | 101 |
| Pyramid and cone, Relation of | 16 | 36 |
| " and cylinder, Intersection of | 19 | 79 |
| " Development of | 16 | 39, 44 |
| " Development of | 16 | 45 |
| " Development of frustum of | 16 | 46 |
| " Projection of | 15 | 64 |
| " Sections of | 15 | 73 |

**Q.**

| | Sec. | Page. |
|---|---|---|
| Quadrangular pyramid, Development of | 16 | 44 |
| Quarterfoil | 20 | 79 |
| Quarter round | 20 | 18, 63 |

**R.**

| | Sec. | Page. |
|---|---|---|
| Radial developments | 16 | 40, 42 |
| " forms | 16 | 49 |
| " lines, Development by | 16 | 8, 36 |
| " solids, Revolution of | 16 | 40 |
| " solids, Stretchouts for | 16 | 39 |
| Rain-water cut-off, Pattern for | 18 | 70 |
| Raked miter | 21 | 13, 14 |
| " mold | 20 | 67 |
| " profile, To find | 21 | 44 |
| Raking bracket | 20 | 68 |
| " bracket, Pattern for | 21 | 52 |
| Reading working drawings | 15 | 31, 56 |
| Rear elevation | 15 | 7 |
| Rectangular pipe, Pattern for elbow in | 19 | 25 |
| " pipe, Pattern for connection in | 19 | 28 |
| Reduction elbow, Pattern for | 18 | 21 |
| Relation of pyramid and cone | 16 | 36 |
| Return miters | 21 | 6 |
| Revolution of radial solids | 16 | 40 |
| Ridge bar | 22 | 4 |
| " ventilator | 22 | 5, 24 |
| Right position of line | 15 | 20 |
| Ringstones | 20 | 71 |
| Rise of arch | 20 | 71 |
| Roman Corinthian order | 20 | 49 |
| " Doric order | 20 | 33 |
| " Ionic order | 20 | 41 |
| Roof connection, Pattern for | 18 | 58, 61 |
| " plan | 15 | 7 |
| Rules for parallel development | 16 | 24 |
| " for radial development | 16 | 42 |
| Russia sheet iron | 17 | 23, 26 |

**S.**

| | Sec. | Page. |
|---|---|---|
| Sash, Swinging | 22 | 8 |
| Scale of modules and parts | 20 | 15 |
| " scoop, Pattern for | 17 | 90 |


Digitized by Google

| | Sec. | Page. |
|---|---|---|
| Scalene cone, Development of. | 16 | 61 |
| " cone, Projection of.... | 15 | 83 |
| Scoop, Pattern for grocer's.... | 17 | 94 |
| Scotia..... | 20 | 19, 64 |
| Secondary projectors. ..... | 15 | 29 |
| " projectors, Arc method of . .... | 15 | 41 |
| Section drawings..... | 15 | 8 |
| " drawings, Use of..... | 15 | 68 |
| " How represented... .. | 15 | 77, 78 |
| " of cube..... ..... | 15 | 69 |
| " of cylinder..... | 15 | 74 |
| " of irregular solid..... | 15 | 75 |
| " of prism..... | 15 | 72 |
| " of pyramid..... | 15 | 73 |
| " of scalene cone..... | 15 | 83 |
| " of sphere..... ..... | 15 | 68 |
| " Position of..... | 15 | 8 |
| Sections, Conic..... . ..... | 15 | 79, 83 |
| " I..... | 15 | 68 |
| " II..... | 15 | 79 |
| Segmental arch..... | 20 | 72 |
| Semicircular arch..... | 20 | 71 |
| Set of plans..... ..... | 15 | 8 |
| Sheet copper..... | 17 | 22, 23 |
| " lead..... | 17 | 29 |
| " metal gauges..... | 17 | 15 |
| " Pattern for slope..... | 19 | 6, 9 |
| " tin..... | 17 | 29 |
| " zinc..... | 17 | 22, 24 |
| Ship ventilator, Pattern for... | 19 | 50, 58 |
| Side elevation..... | 15 | 7 |
| Sight, Line of..... | 15 | 5 |
| Sitz bath, Pattern for..... | 17 | 56 |
| Skewbacks..... | 20 | 71 |
| Skylight bar, Invention of..... | 22 | 2 |
| " bar, Profile of..... | 22 | 3 |
| " Forms of..... | 22 | 1-6 |
| " glass... ..... | 17 | 33 |
| " Louvre for..... | 22 | 7 |
| " Swinging sash for.... | 22 | 8 |
| Slope sheet, Pattern for..... | 19 | 6, 9 |
| Smokestack cap, Pattern for... | 19 | 16 |
| Soffit molding..... | 20 | 77 |
| " of arch..... ..... | 20 | 71 |
| " Pattern for bay-window | 21 | 74 |
| Solids, Classification of..... | 16 | 3 |
| " Development of..... | 16 | 5, 8 |
| " Development of..... | 16 | 9 |
| " Development of intersected..... | 16 | 20 |
| " Development of intricate .... ..... | 16 | 32 |
| " How divided into classes ... .... ..... | 16 | 10 |
| " Irregular..... | 16 | 54, 56 |
| Solids, Irregular ..... | 16 | 57 |
| " Projection of..... | 15 | 53, 57 |
| " Projection of irregular. | 15 | 75 |
| " Revolution of radial.... | 16 | 40 |
| " Sections of irregular... | 15 | 75 |
| " Stretchout for parallel. | 16 | 16 |
| " Stretchout for radial... | 16 | 39 |
| Span of arch..... | 20 | 71 |
| Special hip bar, Pattern for.... | 22 | 18 |
| Specific gravity..... | 17 | 34 |
| Sphere and cylinder, Intersection of... ..... ..... | 15 | 96 |
| " and cylinder, Intersection of..... .... | 16 | 35 |
| " and molding, Miter between ..... ... | 21 | 65 |
| " Development of..... | 16 | 64, 65 |
| " Pattern for..... | 19 | 32 |
| " Sections of..... | 15 | 68 |
| Spirit still, Pattern for..... | 19 | 37 |
| Spout, Pattern for conical..... | 17 | 72 |
| " Pattern for oil-can..... | 17 | 84 |
| Springing line..... ..... | 20 | 70 |
| Square miter, Pattern for..... | 21 | 17 |
| " pan, Pattern for..... | 17 | 38, 42 |
| Stack cap, Pattern for..... | 19 | 16 |
| Stay for rake mold, To find.... | 20 | 67 |
| Steam dome, Pattern for ..... | 19 | 3 |
| Steel-clad bath, Pattern for.... | 17 | 64 |
| Still, Pattern for..... | 19 | 37 |
| Stilted arch..... .. ..... | 20 | 74 |
| Straight molds as parallel forms | 21 | 2 |
| Stretchout..... | 16 | 14 |
| " for parallel solids.. | 16 | 16 |
| " for radial solids.... | 16 | 39 |
| " Laying off..... | 16 | 15 |
| Structures, Ill-proportioned... | 20 | 3 |
| Stylobate..... . ..... | 20 | 13 |
| Surfaces bounded by curved lines..... | 15 | 43 |
| " Hidden..... | 15 | 56 |
| " in a pattern, How related ..... | 16 | 1 |
| " Inclined position of.. | 15 | 40 |
| " Irregularly outlined | 15 | 46 |
| " Oblique irregular.... | 15 | 52 |
| " Oblique position of.. | 15 | 48 |
| " Plane..... ..... | 15 | 34 |
| " Projection of..... | 15 | 37 |
| Swinging sash for skylight.... | 22 | 8 |

**T.**

| | Sec. | Page. |
|---|---|---|
| Table of comparison of gauges | 17 | 20 |
| " of dimensions for liquid measures ..... | 17 | 47 |
| " of gauges for aluminum | 17 | 24 |


Digitized by Google

| | Sec. | Page. |
|---|---|---|
| Table of gauges for copper.... | 17 | 23 |
| " of gauges for Russia sheet iron..... | 17 | 26 |
| " of gauges for zinc..... | 17 | 25 |
| " of specific gravity..... | 17 | 35 |
| " of U. S. standard gauge. | 17 | 21 |
| " of weight of bar iron.... | 17 | 31 |
| " of weight of iron wire... | 17 | 30 |
| " of weight of plate iron.. | 17 | 28 |
| " of weight of round iron. | 17 | 32 |
| " of weight of sheet lead.. | 17 | 29 |
| " of weight of sheet tin.... | 17 | 29 |
| " of weight of skylight glass..... | 17 | 33 |
| " of weight of square iron. | 17 | 32 |
| " of weight of tin plate.... | 17 | 28 |
| Tank top, Pattern for..... | 17 | 97 |
| Three-centered arch..... | 20 | 72 |
| " way elbow, Pattern for. | 18 | 21 |
| Tin plate..... | 17 | 26 |
| T joint, Pattern for..... | 16 | 29 |
| Top, Pattern for oil-tank..... | 17 | 97 |
| " plan..... | 15 | 7 |
| Torus moldings ..... | 20 | 18, 64 |
| Tracery, Window..... | 20 | 77 |
| Transfer, Methods of..... | 17 | 13 |
| Transition piece, Pattern for.. | 18 | 52, 55 |
| " piece, Pattern for.. | 18 | 58, 61 |
| " piece, Pattern for.. | 19 | 21 |
| " piece, Pattern for.. | 21 | 71 |
| Triangle..... | 15 | 79 |
| Triangulation ..... | 16 | 9, 49 |
| " Basis of..... | 15 | 34 |
| " Modified methods of..... | 16 | 60 |
| Triglyph..... | 20 | 10, 31 |
| True edge lines..... | 16 | 41 |
| " length of lines, How found..... | 15 | 34 |
| Tuscan order..... | 20 | 23, 25 |
| Two-pieced elbow, Pattern for | 16 | 29 |

| U. | Sec. | Page. |
|---|---|---|
| Urn, Pattern for octagonal.... | 19 | 82 |
| U. S. standard gauge..... | 17 | 21 |

| V. | Sec. | Page. |
|---|---|---|
| Vase..... | 20 | 19 |
| Venetian Gothic arch..... | 20 | 75 |
| Ventilator, Pattern for Emerson..... | 19 | 18 |
| " Pattern for ship... | 19 | 50, 58 |
| " Ridge..... | 22 | 5, 24 |
| Vertical plane..... | 15 | 15 |
| Views, Foreshortened..... | 15 | 9 |
| " Full..... | 15 | 42 |
| " necessary in projection | 15 | 6 |
| " Position of full .. ..... | 15 | 50 |
| Volute and crown mold, Miter between..... | 21 | 39 |
| Voussoirs..... | 20 | 71 |

| W. | Sec. | Page. |
|---|---|---|
| Wash boiler and cover, Pattern for..... .... | 17 | 86 |
| " miter, Pattern for..... | 21 | 59 |
| Wheelbarrow, Pattern for. ... | 19 | 63 |
| Window, Days of .. ... ..... | 20 | 78 |
| " Head of..... | 20 | 79 |
| " tracery..... | 20 | 77 |
| Wiring operation..... | 17 | 11 |
| Wood-cased bath, Pattern for. | 17 | 59 |
| Working drawings..... | 15 | 2 |
| " drawings, To read... | 15 | 31, 56 |

| Y. | Sec. | Page. |
|---|---|---|
| Y, Pattern for four-way branch | 18 | 25 |

| Z. | Sec. | Page. |
|---|---|---|
| Zinc, Table of gauges of..... | 17 | 25 |
| Zones, Development of sphere by..... | 16 | 64 |

LIBRARY OF THE UNIVERSITY OF

Digitized by Google

Digitized by Google

Digitized by Google

Digitized by Google

UNIVERSITY OF CALIFORNIA LIBRARY
BERKELEY

Return to desk from which borrowed.
**This book is DUE on the last date stamped below.**

APR 8 1948

16Sep52PJ

SEP 4 1952 LU

FEB 5 '76

LD 21–100m-9,'47(A5702s16)476

YC 95607

TS250
I6
96764
v.2